

2015 Harley-Davidson Street Models Service Manual

©2013 H-D.
ALL RIGHTS RESERVED
99611-15

Printed in the U.S.A.

VISIT THE HARLEY-DAVIDSON WEB SITE
http://www.harley-davidson.com

CMI - .4M - 12/13

READER COMMENTS

Cut Here

The Harley-Davidson Service Communications Department maintains a continuous effort to improve the quality and usefulness of its publications. To do this effectively, we need user feedback - your critical evaluation of this manual.

Please comment on the completeness, accuracy, organization, usability, and readability of this manual.

Please list the page, item, and part number(s) of any errors you find in this manual.

Please tell us how we can improve this manual.

Occupation:

Name: Dealership:

Street: Department:

City: State: Zip:

Cut Here

2015 Harley-Davidson Street Models Service Manual (99611-15)

Please clip out and mail to:
Service Communications Department
Harley-Davidson Motor Company
P.O. Box 653
Milwaukee, WI USA 53201

NOTES

ABOUT THIS MANUAL

GENERAL

This manual has been created to inform Harley-Davidson technicians about the construction of Harley-Davidson products and the latest tested and approved maintenance and repair techniques.

MANUAL LAYOUT

Safety

Refer to the Safety section before performing any procedures on a vehicle.

Sections

This service manual is organized into chapters, sections and topics. Each section is laid out in the following manner:

- Prepare
- Remove
- Install
- Disassemble (if applicable)
- Clean/Inspect (if applicable)
- Assemble (if applicable)
- Complete

Topics

The purpose of the **Prepare** topics is to to provide an outline of procedures required before beginning a specific task. Links to the necessary procedures are provided in the topic.

The **Remove** and **Install** topics allow the technician to only remove and install the component - which may be all that is required. If a component can be repaired, **Disassemble**, **Assemble** and **Clean/Inspect** topics are provided as appropriate.

Complete topics provide a list of procedures that need to be performed to return the vehicle to ride-ready condition. If additional removal procedures need to be performed, move to the next section without performing the Complete topics in the current section.

Procedural Steps

Each topic contains steps to complete the procedure. These steps are laid out in numeric and alpha steps.

The purpose of the numeric steps is to provide the experienced technician with high-level information to complete the procedure.

The alpha steps provide a less-experienced technician with step-by-step instructions to perform the procedure.

Symbol Identification

Symbols are used in some graphics to provide information about parts. Refer Table i-1 for symbol definitions.

Table i-1. Symbols

Symbol	Description
	**Apply Lubricant:** Indicates a part that should be lubricated during installation.
	**Discard/Do Not Reuse:** Indicates a part that must be replaced with a **new** part during installation.
	**Apply Sealant:** Indicates a part that must be installed with a threadlocker or sealant.
	**Special Tool:** Indicates that a special tool is recommended.
	**Measure:** Indicates a part that should be measured or gauged to verify that it is within specification.

HOW TO USE THIS SERVICE MANUAL

Cross-References and Page Numbers

A cross-reference shown as **2.2 SPECIFICATIONS** refers to chapter 2 CHASSIS, heading 2.2 SPECIFICATIONS.

All pages contain a chapter number followed by a page number. For example, **page 3-5** refers to page 5 in Chapter 3.

Item References and Quantities

In figure legends and tables, the number in parentheses that follows the part name indicates the quantity of that part necessary for one complete assembly.

Example:

2. Rocker cover screw (4)

In a procedure step or paragraph, the number in parentheses that follows a part name indicates the legend item of the part in the figure referenced by the text.

Example:

1. Remove rocker cover screws (2).

Acronyms and Abbreviations

Acronyms and abbreviations are used in this document. See the C.4 GLOSSARY for a list of acronyms, abbreviations and definitions.

PREPARATION FOR SERVICE

- Start each job with a clean work area.
- Clean the motorcycle before work begins.
- Gather any tools, instruments and parts needed for the job before work begins.
- Carefully read all related service information, including service bulletins, before service work begins.

USE GENUINE REPLACEMENT PARTS

⚠WARNING

Harley-Davidson parts and accessories are designed for Harley-Davidson motorcycles. Using non-Harley-Davidson parts or accessories can adversely affect performance, stability or handling, which could result in death or serious injury. (00001b)

To achieve satisfactory and lasting repairs, carefully follow the service manual instructions and use **only** genuine Harley-Davidson replacement parts.

SHOP PRACTICES

Removing Parts

Always use blocking or proper stands to support the part that has been hoisted. If a part cannot be removed, verify that all bolts and attaching hardware have been removed. Verify that no parts are in the way of the part being removed.

When removing hoses, wiring or tubes, always tag each part to verify proper installation.

Cleaning

Thoroughly clean all parts to be reused before assembly. Clean parts promote better component operation and longer life. Seals, filters and covers used in this vehicle keep out extraneous dirt and dust. Keep these items in good condition to guarantee satisfactory operation. See i.1 FOREWORD, Cleaning.

Checking Torques on Fasteners

Check torque using a torque wrench set to the minimum specification for that fastener. If the fastener does not rotate, the torque has been maintained. If the fastener rotates, remove it to determine if it has a threadlocking agent.

If it has a threadlocking agent, clean all material from the threaded hole. Replace the fastener with a **new** one or clean the original fastener threads and apply the appropriate threadlocking product. Install and tighten the fastener to specification.

If the fastener does not use a threadlocking agent, install and tighten it to specification.

CLEANING

General

Any cleaning method may be used as long as it does not result in parts damage. Thorough cleaning is necessary for proper parts inspection. Strip rusted paint areas to bare metal before priming and repainting.

Always clean around lines or covers before they are removed. When cleaning parts:

- Plug, tape or cap holes and openings to keep out dirt, dust and debris.
- Clean and inspect all parts as they are removed.
- Cover all clean parts with clean lint-free cloth, paper or other material.
- Verify that the part is clean when installed.

Cleaning Threads and Threaded Holes

Always verify cleanliness of blind holes before assembly. Tightening a screw with dirt, water or oil in the hole can cause castings to crack or break. When instructed to clean fastener threads or threaded holes, always:

- Clean all threadlocking material from fastener threads and threaded holes.
- Use a wire brush to clean fastener threads.
- Use a thread chaser or other suitable tool to clean threaded holes.
- Use PJ1 cleaner or equivalent to remove all traces of oil and contaminants from threads.
- Clear all threaded holes with low pressure compressed air.

Cleaning Plastic and Rubber Parts

Never use cleaners containing chlorine or ammonia on plastic parts. Chlorine will cause parts to become distorted and brittle resulting in cracks. Ammonia will cause cloudiness and brittleness in windshields and non-painted parts to form a white haze.

Before cleaning, protect rubber parts (such as hoses, boots and electrical insulation) from cleaning solutions. Use a grease-proof barrier material. Remove the rubber part if it cannot be properly protected.

Rust or Corrosion Removal

Remove rust and corrosion with a wire brush, abrasive cloth, sand blasting, vapor blasting or rust remover. Use buffing crocus cloth on highly polished parts that are rusted.

Bearings

Wash bearings in a non-flammable petroleum cleaning solution. Never use a solution that contains chlorine. Knock out packed lubricant by tapping the bearing against a wooden block. Wash bearings again.

⚠WARNING

Using compressed air to "spin dry" bearings can cause bearing to fly apart, which could result in death or serious injury. (00505b)

Cover bearings with a clean shop towel. Allow bearings to air dry. Do not spin bearings while they are drying. Never use compressed air to dry bearings.

When dry, coat bearings with clean oil. Wrap bearings in clean paper.

DISPOSAL AND RECYCLING

Many communities maintain facilities for recycling used fluids, plastics and metals. Dispose of or recycle used oil, lubricants, fuel, coolant, brake fluid and batteries in accordance with local regulations.

TOOLS AND MATERIALS

⚠WARNING

Read and follow warnings and directions on all products. Failure to follow warnings and directions can result in death or serious injury. (00470b)

Some service procedures require the use of tools specially designed for a specific purpose. These tools should be used when and as recommended.

When reference is made in this manual to a specific brand name product, tool or instrument, an equivalent product, tool or instrument may be substituted.

Special Tools

Tools mentioned in this manual with a part number that begins with an "HD", "J" or "B" must be ordered through your local Harley-Davidson dealer. Special tools may only be purchased, serviced or warrantied through a Harley-Davidson dealership.

LOCTITE Sealing and Threadlocking Products

Some procedures in this manual call for the use of LOCTITE products. If you have any questions regarding LOCTITE product usage or retailer/wholesaler locations, contact Loctite Corp. at www.loctite.com.

PRODUCT REGISTERED MARKS

Apple, Alcantara S.p.A., Allen, Amp Multilock, Bluetooth, Brembo, Delphi, Deutsch, Dunlop, Dynojet, Fluke, G.E. Versilube, Garmin, Gunk, Hydroseal, Hylomar, iPhone, iPod, Kevlar, Lexan, Loctite, Lubriplate, Keps, K&N, Magnaflux, Marson Thread-Setter Tool Kit, MAXI fuse, Molex, Michelin, MPZ, Mulitilock, nano, NGK, Novus, Packard, Pirelli, Permatex, Philips, PJ1, Pozidriv, Robinair, S100, Sems, SiriusXM, Snap-on, Teflon, Threadlocker, Torca, Torco, TORX, Tufoil, Tyco, Ultratorch, Velcro, X-Acto, XM Satellite Radio, and zūmo are among the trademarks of their respective owners.

H-D U.S.A., LLC TRADEMARK INFORMATION

Bar & Shield, Boom!, Cross Bones, Cruise Drive, CVO, Digital Tech, Digital Technician, Digital Technician II, Dyna, Electra Glide, Evolution, Fat Bob, Fat Boy, Forty-Eight, Glaze, Gloss, H-D, H-Dnet.com, Harley, Harley-Davidson, HD, Heritage Softail, Iron 883, Low Rider, Night Rod, Nightster, Night Train, Profile, Reflex, Revolution, Road Glide, Road King, Road Tech, Rocker, Screamin' Eagle, Seventy-Two, Softail, Sportster, Street Glide, Street Rod, Sun Ray, Sunwash, Super Glide, SuperLow, Switchback, SYN3, TechLink, TechLink II, Tour-Pak, Tri Glide, Twin Cam 88, Twin Cam 88B, Twin Cam 96, Twin Cam 96B, Twin Cam 103, Twin Cam 103B, Twin Cam 110, Twin Cam 110B, Twin-Cooled, Ultra Classic, V-Rod, VRSC and Harley-Davidson Genuine Motor Parts and Genuine Motor Accessories are among the trademarks of H-D U.S.A., LLC.

CONTENTS

All photographs, illustrations and procedures may not necessarily depict the most current model or component, but are based on the latest production information available at the time of publication.

Since product improvement is our continual goal, Harley-Davidson reserves the right to change specifications, equipment or designs at any time without notice and without incurring obligation.

NOTES

SAFETY

1.1 SAFETY

Safety....1-1
Safety Messages....1-1
Customer Safety....1-1
Personal Protection....1-1
Tool Safety....1-1
Product Safety....1-1
Hazardous Materials....1-2

MAINTENANCE

2.1 FASTENER TORQUE VALUES

Fastener Torque Values in this Chapter....2-1

2.2 GENERAL

Servicing a New Motorcycle....2-2
Secure the Motorcycle for Service....2-2
Set Motorcycle Upright....2-2
Raise Front or Rear Wheel for Service....2-2

2.3 MAINTENANCE SCHEDULE

General....2-3

2.4 FUEL AND OIL

Fuel....2-5
Gasoline Blends....2-5
Engine Lubrication....2-5
Winter Lubrication....2-6

2.5 REPLACE ENGINE OIL AND FILTER

Check Engine Oil Level....2-7
Cold Check....2-7
Hot Check....2-7
Change Oil and Oil Filter....2-7

2.6 INSPECT TIRES

General....2-9
Tire Pressure....2-9
Tread....2-9
Replace....2-10
Inspect....2-10
When To Replace Tires....2-10

2.7 LUBRICATE CABLE AND CHASSIS

General....2-11
Lubrication Points....2-11
Cables and Levers....2-11
Jiffy Stand....2-11
Steering Head Bearings....2-11
Brake Caliper Pins and Bushings....2-11
Fuel Cap Lock....2-11

2.8 INSPECT BRAKES

Inspect....2-12
Brake Caliper Pins and Bushings....2-12
Brake Lines....2-12
Brake Pad Thickness....2-12
Brake Disc Thickness, Lateral Runout and Warping....2-12
Replace Front Brake Pads....2-12
Remove....2-12
Inspect....2-13
Install....2-13
Replace Rear Brake Pads....2-14
Remove....2-14
Inspect....2-14
Install....2-15

2.9 CHECK AND REPLACE BRAKE FLUID

Check Brake Fluid Level....2-17
Front....2-17
Rear....2-17
Drain and Replace Fluid....2-17

2.10 CHECK AND ADJUST THROTTLE CABLES

Check and Adjust....2-18
Check....2-18
Adjust....2-18
Lubricate....2-18

2.11 CHECK AND ADJUST CLUTCH

Check and Adjust....2-19
Check Free Play....2-19
Adjust Cable....2-19

2.12 ADJUST BRAKE LINKAGE

Adjust....2-20

2.13 REBUILD FRONT FORK AND REPLACE OIL

Rebuild and Replace Fork Oil....2-21

2.14 ADJUST STEERING HEAD BEARINGS

Prepare....2-22
Fall-Away....2-22
Measure....2-22
Adjust....2-22
Lubricate....2-23
Complete....2-23

2.15 INSPECT RADIATOR AND COOLANT

Prepare....2-24
General....2-24
Clean Radiator....2-24
Inspect....2-24
Check Freeze Point....2-24
Check for Leaks....2-25
Check Clamps....2-25
Replace....2-25
Complete....2-25

2.16 INSPECT FUEL LINES AND FITTINGS

Inspect....2-26

2.17 INSPECT JIFFY STAND

Inspect and Lubricate....2-27

2.18 INSPECT REAR FORK BEARING

Inspect....2-28

2.19 INSPECT AND ADJUST DRIVE BELT AND SPROCKETS

Inspect....2-29
Sprockets....2-29
Drive Belt....2-29
Measure Drive Belt Deflection....2-30

TABLE OF CONTENTS

Adjust Belt....2-30

2.20 INSPECT REAR WHEEL COMPENSATOR

Inspect....2-32

2.21 INSPECT REAR SHOCK ABSORBER BUSHINGS

Inspect....2-33

2.22 INSPECT EXHAUST SYSTEM

Leak Check....2-34

2.23 INSPECT AIR FILTER

Remove....2-35
Install....2-35
Inspect....2-35

2.24 INSPECT AND ADJUST VALVE LASH

Prepare....2-36
Inspect and Adjust....2-36
- Measure....2-36
- Adjust....2-36

Complete....2-36

2.25 INSPECT BATTERY

Prepare....2-38
Remove....2-38
Install....2-38
Clean and Inspect....2-39
Voltage Test....2-39
Storage....2-39
Complete....2-40

2.26 REPLACE SPARK PLUGS

Prepare....2-41
Remove....2-41
Install....2-41
Clean and Inspect....2-41
- Spark Plugs....2-41
- Spark Plug Cables....2-41

Complete....2-42

2.27 STORAGE

Place in Storage....2-43
Remove From Storage....2-43

2.28 TROUBLESHOOTING

General....2-44
Engine....2-44
- Starter Motor Does Not Operate or Does Not Turn Engine Over....2-44
- Engine Turns Over but Does Not Start....2-44
- Starts Hard....2-44
- Starts But Runs Irregularly or Misses....2-44
- Spark Plug Fouls Repeatedly....2-44
- Pre-Ignition or Detonation (Knocks or Pings)....2-44
- Overheating....2-45
- Valve Train Noise....2-45
- Excessive Vibration....2-45
- Check Engine Light Illuminates During Operation....2-45

Lubrication System....2-45
- Engine Uses Too Much Oil or Smokes Excessively....2-45
- Engine Leaks Oil from Cases, Hoses, etc....2-45
- Low Oil Pressure....2-45
- High Oil Pressure....2-45

Electrical System....2-45
- Alternator Does Not Charge....2-45
- Alternator Charge Rate is Below Normal....2-45
- Speedometer Operates Erratically....2-45

Transmission....2-45
- Shifts Hard....2-45
- Jumps Out of Gear....2-46
- Clutch Slips....2-46
- Clutch Drags or Does Not Release....2-46
- Clutch Chatters....2-46

Handling....2-46
- Irregularities....2-46

Brakes....2-46
- Brake Does Not Hold Normally....2-46

CHASSIS

3.1 FASTENER TORQUE VALUES

Fastener Torque Values in this Chapter....3-1

3.2 SPECIFICATIONS

Chassis....3-3
- General....3-3
- Wheels and Tires....3-3

3.3 VEHICLE IDENTIFICATION NUMBER (VIN)

Vehicle Identification Number (VIN)....3-5
- General....3-5
- Location....3-5
- Abbreviated VIN....3-5

3.4 FRONT WHEEL

Prepare....3-7
Remove....3-7
Install....3-8
Disassemble....3-8
Clean and Inspect....3-9
Assemble....3-9
Complete....3-9

3.5 REAR WHEEL

Prepare....3-10
Remove....3-10
Install....3-12
Disassemble....3-12
Clean and Inspect....3-13
Assemble....3-13
Complete....3-13

3.6 REAR WHEEL COMPENSATOR

Prepare....3-14
Remove....3-14
Install....3-14
Disassemble....3-14

Clean and Inspect....3-15
Assemble....3-15
Complete....3-15

3.7 WHEEL RUNOUT

Prepare....3-16
Inspect....3-16
Wheel Stand....3-16
Lateral Runout....3-16
Radial Runout....3-16
Complete....3-16

3.8 SEALED WHEEL BEARINGS

Prepare....3-17
Inspect....3-17
Lateral End Play....3-17
General Inspection....3-17
Remove....3-18
Install....3-18
Complete....3-19

3.9 TIRES

Prepare....3-20
Remove....3-20
Install....3-20
Clean and Inspect....3-20
General....3-20
Tire Runout....3-20
Balance....3-21
Static vs Dynamic....3-21
Weights....3-21
Complete....3-22

3.10 WHEEL ALIGNMENT

Prepare....3-23
Inspect....3-23
Adjust....3-23
Complete....3-23

3.11 FRONT BRAKE MASTER CYLINDER

Prepare....3-24
Remove....3-24
Install....3-25
Clean and Inspect....3-25
Complete....3-25

3.12 FRONT BRAKE CALIPER

Prepare....3-26
Remove....3-26
Install....3-26
Clean and Inspect....3-26
Complete....3-26

3.13 REAR BRAKE MASTER CYLINDER

Prepare....3-27
Remove....3-27
Install....3-27
Clean and Inspect....3-28
Complete....3-28

3.14 REAR BRAKE CALIPER

Prepare....3-29
Remove....3-29
Install....3-29
Clean and Inspect....3-29
Complete....3-29

3.15 BRAKE LINES

Prepare....3-30
Remove....3-30
Front Brake Line....3-30
Rear Brake Line....3-30
Install....3-31
Front Brake Line....3-31
Rear Brake Line....3-31
Clean and Inspect....3-31
Complete....3-31

3.16 BLEED BRAKES

Drain....3-32
Front Brake System....3-32
Rear Brake System....3-32
Fill and Bleed....3-32
Front Brake System....3-32
Rear Brake System....3-33

3.17 SIDE COVERS

Remove....3-34
Install....3-34

3.18 FRONT FORK

Fork Oil Leak Check....3-35
Fork Oil Seals....3-35
Oil Leak Check....3-35
Prepare....3-35
Remove....3-35
Install....3-36
Drain and Fill Forks....3-36
Drain Fork Oil....3-36
Fill Fork Oil....3-36
Disassemble....3-37
Clean and Inspect....3-38
Assemble....3-39
Complete....3-39

3.19 STEERING HEAD/FORK STEM AND BRACKET ASSEMBLY

Prepare....3-40
Remove....3-40
Install....3-40
Clean and Inspect....3-41
Complete....3-41

3.20 REAR FORK

Prepare....3-42
Remove....3-42
Install....3-42
Disassemble....3-42
Clean and Inspect....3-43
Assemble....3-43

Complete....3-43

3.21 BELT GUARDS

Remove....3-44
Install....3-44

3.22 SHOCK ABSORBERS

Prepare....3-46
Remove....3-46
Install....3-46
Clean and Inspect....3-46
Adjust Preload....3-46
Complete....3-47
Disposal....3-47

3.23 CLUTCH CONTROL

Prepare....3-48
Remove....3-48
- Clutch Cable....3-48
- Clutch Hand Control....3-48

Install....3-49
- Clutch Cable....3-49
- Clutch Hand Control....3-49

Clean and Inspect....3-50
Complete....3-50

3.24 THROTTLE CONTROL

Prepare....3-51
Remove....3-51
- Right Hand Grip....3-51
- Throttle Cables....3-51

Install....3-53
- Throttle Cables....3-53
- Right Hand Grip....3-53

Clean and Inspect....3-53
Complete....3-53

3.25 HEADLAMP FAIRING

Remove....3-54
Install....3-54

3.26 HAND GRIPS

Remove....3-56
- Left....3-56
- Right....3-56

Install....3-56
- Left....3-56
- Right....3-56

3.27 HANDLEBAR

Prepare....3-57
Remove....3-57
- Handlebar....3-57
- Handlebar Riser....3-57

Install....3-57
- Handlebar Riser....3-57
- Handlebar....3-57

Complete....3-57

3.28 MIRRORS

Remove....3-59
Install....3-59

3.29 FRONT FENDER

Remove....3-60
Install....3-60

3.30 REAR FENDER

Prepare....3-61
Remove....3-61
Install....3-61
Complete....3-61

3.31 SAREE GUARD

Prepare....3-62
Remove....3-62
Install....3-62
Complete....3-62

3.32 FRONT LICENSE PLATE BRACKET

Prepare....3-63
Remove....3-63
Install....3-63
Complete....3-63

3.33 REAR LICENSE PLATE BRACKET

Prepare....3-64
Remove....3-64
Install....3-64
Complete....3-64

3.34 RIDER FOOT CONTROLS

Prepare....3-65
Remove....3-65
- Right Side....3-65
- Left Side....3-65

Install....3-66
- Right Side....3-66
- Left Side....3-66

Disassemble....3-67
- Right Side....3-67
- Left Side....3-67

Assemble....3-68
- Right Side....3-68
- Left Side....3-68

Complete....3-68

3.35 PASSENGER FOOTPEGS

Remove....3-69
Install....3-69
Clean and Inspect....3-69

3.36 SEAT

Remove....3-70
- Seat....3-70
- Seat Retention Nut....3-70
- Seat Strap....3-70

Install....3-71
- Seat....3-71
- Seat Retention Nut....3-71
- Seat Strap....3-71

3.37 JIFFY STAND

Remove....3-72
Install....3-72
Clean and Inspect....3-72

ENGINE

4.1 FASTENER TORQUE VALUES

Fastener Torque Values in this Chapter....4-1

4.2 SPECIFICATIONS

Engine....4-3
Service Wear Limits....4-5

4.3 ENGINE OIL FLOW

Operation....4-7
- Main Oil Distribution....4-7
- Left Side Oil Distribution....4-7
- Right Side Oil Distribution....4-7

4.4 BREATHER OPERATION

General....4-9
- Operation....4-9
- Flow....4-9

4.5 OIL PRESSURE

Operation....4-10
Oil Pressure Check....4-10

4.6 TROUBLESHOOTING

Compression Test....4-11
Smoking Engine or High Oil Consumption....4-11
- Check Prior to Cylinder Head Removal:....4-11
- Check After Cylinder Head Removal:....4-11

Oil Pressure Test....4-11
Troubleshooting Tables....4-12

4.7 FRONT ENGINE MOUNT

Prepare....4-16
Remove....4-16
- Lower....4-16
- Upper....4-16

Inspect....4-17
Install....4-18
- Lower....4-18
- Upper....4-18

Complete....4-18

4.8 REAR ENGINE MOUNT

Prepare....4-19
Remove....4-19
Install....4-19
Inspect....4-19
Complete....4-19

4.9 REPLACE ENGINE

Remove....4-20
Install....4-21

4.10 REBUILD ENGINE

Engine Rotation and Top Dead Center (TDC)....4-23
- Engine Rotation....4-23

Engine Rebuild Sequence....4-23
- Disassemble....4-23
- Assemble....4-25

4.11 INTAKE ADAPTER

Prepare....4-27
Remove....4-27
Install....4-27
Clean and Inspect....4-27
Complete....4-27

4.12 CYLINDER HEAD COVERS

Prepare....4-28
Remove....4-28
Install....4-28
Disassemble....4-28
Clean and Inspect....4-29
Assemble....4-29
Complete....4-29

4.13 CAMSHAFT SPROCKET AND TIMING CHAIN

Prepare....4-30
Camshaft Sprocket, Timing Chain and Cam Timing....4-30
- One Cam Removed....4-30
- Both Cams Removed....4-30
- Timing Chain Tensioner....4-31
- Camshaft Sprocket and Timing Chain....4-31

Install....4-31
- Camshaft Sprocket and Timing Chain....4-31
- Timing Chain Tensioner....4-32

Clean and Inspect....4-33
- Camshaft Sprocket and Timing Chain....4-33
- Timing Chain Tensioner....4-33

Complete....4-33

4.14 CYLINDER HEADS

Prepare....4-34
Remove....4-34
Install....4-34
Disassemble....4-35
Clean and Inspect....4-35
Assemble....4-35
Complete....4-35

4.15 ROCKER ARMS

Prepare....4-36
Remove....4-36
Install....4-36
Clean and Inspect....4-37
Complete....4-37

4.16 CAMSHAFT ASSEMBLY

Prepare....4-38
Remove....4-38
Install....4-38
Clean and Inspect....4-38

Complete....4-38

4.17 VALVES

Prepare....4-39
Remove....4-39
Install....4-39
Clean and Inspect....4-40
Complete....4-40

4.18 CHAIN GUIDE

Prepare....4-41
Remove....4-41
Install....4-41
Clean and Inspect....4-41
Complete....4-41

4.19 CYLINDERS

Prepare....4-43
Remove....4-43
Install....4-43
Disassemble....4-43
Clean and Inspect....4-44
Assemble....4-44
Complete....4-44

4.20 PISTONS

Prepare....4-45
Remove....4-45
Install....4-45
Disassemble....4-46
Clean and Inspect....4-46
Check Piston Ring Gap....4-46
Assemble....4-46
Complete....4-47

4.21 ALTERNATOR COVER

Prepare....4-48
Remove....4-48
Install....4-48
Disassemble....4-48
Assemble....4-48
Complete....4-49

4.22 CLUTCH COVER

Prepare....4-50
Remove....4-50
Install....4-50
Disassemble....4-50
Assemble....4-50
Complete....4-51

4.23 BALANCER

Prepare....4-52
Remove....4-52
Install....4-52
Complete....4-53

4.24 CRANKSHAFT GEAR

Prepare....4-54
Remove....4-54
Install....4-54
Complete....4-54

4.25 STARTER GEAR

Prepare....4-55
Remove....4-55
Install....4-55
Complete....4-55

4.26 OIL PUMP

Prepare....4-56
Remove....4-56
Oil Pump....4-56
Oil Filter Adapter....4-56
Install....4-56
Oil Pump....4-56
Oil Filter Adapter....4-56
Complete....4-57

4.27 OIL STRAINER

Prepare....4-58
Remove....4-58
Install....4-58
Complete....4-58

4.28 CRANKCASE ASSEMBLY

Prepare....4-59
Disassemble....4-59
Assemble....4-59
Complete....4-60

4.29 MAIN BEARINGS

Prepare....4-61
Remove....4-61
Install....4-61
Complete....4-62

4.30 CRANKCASE OIL NOZZLES

Prepare....4-63
Remove....4-63
Install....4-63
Complete....4-63

4.31 OIL PASSAGE PLUGS

Prepare....4-64
Remove....4-64
Install....4-64
Complete....4-65

4.32 CRANKSHAFT AND CONNECTING RODS

Prepare....4-66
Remove....4-66
Install....4-66
Disassemble....4-66
Clean and Inspect....4-66
Assemble....4-67
Complete....4-68

DRIVE/TRANSMISSION

5.1 FASTENER TORQUE VALUES

Fastener Torque Values in this Chapter....5-1

5.2 SPECIFICATIONS: DRIVE

Transmission and Clutch....5-2
Service Wear Limits....5-2

5.3 TRANSMISSION OPERATION

Power Flow....5-3
Neutral....5-3
First Gear....5-3
Second Gear....5-3
Third Gear....5-3
Fourth Gear....5-3
Fifth Gear....5-3
Sixth Gear....5-3

5.4 DRIVE BELT

Prepare....5-5
Remove....5-5
Install....5-5
Complete....5-5

5.5 OUTPUT PULLEY

Prepare....5-6
Remove....5-6
Install....5-6
Complete....5-6

5.6 SHIFTER SHAFT

Prepare....5-7
Remove....5-7
Shifter Shaft Assembly....5-7
Detent Assembly....5-7
Shifter Shaft Seal....5-7
Install....5-7
Shifter Shaft Seal....5-7
Detent Assembly....5-7
Shifter Shaft Assembly....5-7
Disassemble....5-8
Assemble....5-8
Complete....5-8

5.7 CLUTCH

Prepare....5-9
Remove....5-9
Install....5-9
Disassemble....5-9
Clean and Inspect....5-10
Assemble....5-10
Complete....5-12

5.8 DRUM AND FORKS

Prepare....5-13
Remove....5-13
Install....5-13
Disassemble....5-13
Assemble....5-14
Complete....5-14

5.9 TRANSMISSION

Prepare....5-15
Remove....5-15
Install....5-15
Disassemble....5-15
Input Shaft....5-15
Output Shaft....5-15
Assemble....5-15
Input Shaft....5-15
Output Shaft....5-15
Complete....5-17

5.10 TRANSMISSION RIGHT CRANKCASE BEARINGS

Prepare....5-18
Remove....5-18
Install....5-18
Complete....5-18

5.11 TRANSMISSION LEFT CRANKCASE BEARINGS

Prepare....5-19
Remove....5-19
Install....5-19
Complete....5-19

FUEL AND EXHAUST

6.1 FASTENER TORQUE VALUES

Fastener Torque Values in this Chapter....6-1

6.2 SPECIFICATIONS

Specifications....6-2

6.3 AIR CLEANER ASSEMBLY

Prepare....6-3
Remove....6-3
Install....6-3
Complete....6-4

6.4 LIFT REAR OF FUEL TANK

Prepare....6-5
Lift....6-5
Secure....6-5
Complete....6-5

6.5 FUEL TANK

Prepare....6-6
Remove....6-6
Install....6-6
Complete....6-6

6.6 FUEL LINE

Remove....6-7
Purge....6-7
Remove....6-7
Install....6-7

TABLE OF CONTENTS

6.7 FUEL PRESSURE TEST

Prepare....6-8
Test....6-8
Complete....6-8

6.8 FUEL PUMP ASSEMBLY

Prepare....6-9
Remove....6-9
Install....6-9
Complete....6-10

6.9 VENT TUBE

Prepare....6-11
Remove....6-11
Install....6-11
Complete....6-11

6.10 VAPOR VALVE

Prepare....6-12
Remove....6-12
Install....6-12
Complete....6-12

6.11 IDLE AIR CONTROL (IAC)

Prepare....6-13
Remove....6-13
Install....6-13
Complete....6-13

6.12 FUEL INJECTORS

Prepare....6-14
Remove....6-14
Install....6-14
Complete....6-15

6.13 TEMPERATURE MANIFOLD ABSOLUTE PRESSURE (TMAP) SENSOR

Prepare....6-16
Remove....6-16
Install....6-16
Complete....6-16

6.14 BREATHER HOSES

Prepare....6-17
Remove....6-17
Install....6-17
Complete....6-17

6.15 INDUCTION MODULE

Prepare....6-18
Remove....6-18
Install....6-18
Complete....6-18

6.16 OXYGEN (O2) SENSOR

Remove....6-19
Install....6-19

6.17 MUFFLER

Remove....6-20
End Cap....6-20
Muffler....6-20
Install....6-20
End Cap....6-20
Muffler....6-20

6.18 EXHAUST SYSTEM

Prepare....6-21
Remove....6-21
Install....6-21
Disassemble....6-22
Assemble....6-22
Complete....6-22

6.19 INTAKE LEAK TEST

Leak Tester....6-23
Parts List....6-23
Tester Assembly....6-23
Tester Adjustment....6-23
Procedure....6-23

6.20 PURGE SOLENOID: CALIFORNIA EMISSIONS

Prepare....6-24
Remove....6-24
Install....6-24
Complete....6-24

6.21 CHARCOAL CANISTER: CALIFORNIA EMISSIONS

Prepare....6-25
Remove....6-25
Install....6-25
Complete....6-25

6.22 PURGE LINES: CALIFORNIA EMISSIONS

Prepare....6-26
Remove....6-26
Install....6-26
Complete....6-27

COOLING SYSTEM

7.1 FASTENER TORQUE VALUES

Fastener Torque Values in this Chapter....7-1

7.2 SPECIFICATIONS

General....7-2

7.3 COOLANT FLOW

Operation....7-3
Engine Below Operating Temperature....7-3
Coolant Flow With Engine At Operating Temperature....7-3
Coolant Overflow Tank....7-3

7.4 DIAGNOSE AND TEST

Troubleshooting....7-4

Low Engine Temperature....7-4
High Engine Temperature....7-4
Coolant Leaks....7-4
Pressure Cap Test....7-4
System Pressure Test....7-4
Freeze Point Test....7-5
Leak Detection Dye Test....7-6
Tests for Leaking Gasket....7-6

7.5 COOLANT

Prepare....7-7
Check Coolant Level....7-7
Drain and Fill Cooling System....7-7
Drain Cooling System....7-7
Fill Cooling System....7-7
Complete....7-8

7.6 THERMOSTAT HOUSING

Prepare....7-9
Remove....7-9
Install....7-9
Complete....7-9

7.7 COOLANT PUMP

Prepare....7-10
Remove....7-10
Install....7-10
Completion....7-11

7.8 COOLANT OVERFLOW TANK

Prepare....7-12
Remove....7-12
Install....7-12
Complete....7-12

7.9 COOLANT HOSES

Prepare....7-13
Remove....7-13
Inspect....7-13
Install....7-13
Complete....7-14

7.10 ENGINE COOLANT TEMPERATURE (ECT) SENSOR

Prepare....7-15
Remove....7-15
Install....7-15
Complete....7-15

7.11 RADIATOR

Prepare....7-16
Remove....7-16
Install....7-16
Complete....7-17

ELECTRICAL

8.1 FASTENER TORQUE VALUES

Fastener Torque Values in this Chapter....8-1

8.2 SPECIFICATIONS

Specifications....8-3

8.3 FUSES AND RELAYS

Prepare....8-4
Remove....8-4
Fuses....8-4
Relays....8-4
Diode Pack....8-4
Install....8-4
Fuses....8-4
Relays....8-4
Diode Pack....8-4
Complete....8-5

8.4 POWER DISCONNECT

Disconnect Power....8-6
Disconnect Negative Battery Cable....8-6
Remove Main Fuse....8-6
Connect Power....8-6
Connect Negative Battery Cable....8-6
Install Main Fuse....8-6

8.5 STARTER

Prepare....8-7
Remove....8-7
Install....8-7
Complete....8-7

8.6 STARTER SOLENOID

Prepare....8-8
Remove....8-8
Install....8-8
Complete....8-8

8.7 ALTERNATOR

Prepare....8-9
Remove....8-9
Install....8-9
Complete....8-9

8.8 VOLTAGE REGULATOR

Prepare....8-10
Remove....8-10
Voltage Regulator....8-10
Voltage Regulator Bracket....8-10
Install....8-10
Voltage Regulator Bracket....8-10
Voltage Regulator....8-10
Complete....8-10

8.9 IGNITION SWITCH

Prepare....8-11
Remove....8-11
Install....8-11
Complete....8-11

8.10 IGNITION COIL

Prepare....8-12
Remove....8-12

Install....8-12
Complete....8-12

8.11 SPARK PLUG CABLE

Remove....8-13
Install....8-13

8.12 LEFT HANDLEBAR SWITCH HOUSING

Prepare....8-14
Remove....8-14
Install....8-14
Complete....8-14

8.13 RIGHT HANDLEBAR SWITCH HOUSING

Prepare....8-15
Remove....8-15
Install....8-15
Complete....8-15

8.14 SPEEDOMETER

Prepare....8-16
Remove....8-16
Install....8-16
Complete....8-16

8.15 OIL PRESSURE SWITCH

Prepare....8-17
Remove....8-17
Install....8-17
Complete....8-17

8.16 NEUTRAL INDICATOR SWITCH

Prepare....8-18
Remove....8-18
Install....8-18
Complete....8-18

8.17 HORN

Prepare....8-19
Remove....8-19
Install....8-19
Complete....8-19

8.18 HEADLAMP

Prepare....8-20
Remove....8-20
- Bulb....8-20
- Headlamp....8-20

Install....8-20
- Bulb....8-20
- Headlamp....8-20

Align....8-21
Adjust....8-21
Complete....8-22

8.19 FRONT TURN SIGNAL LAMPS

Prepare....8-23
Remove....8-23
- Bulb....8-23
- Lamp....8-23

Install....8-23
- Bulb....8-23
- Lamp....8-23

Complete....8-23

8.20 REAR TURN SIGNAL LAMPS

Prepare....8-24
Remove....8-24
- Bulb....8-24
- Lamp....8-24

Install....8-24
- Bulb....8-24
- Lamp....8-24

Complete....8-25

8.21 TURN SIGNAL FLASHER

Prepare....8-26
Remove....8-26
Install....8-26
Complete....8-26

8.22 TAIL LAMP

Prepare....8-27
Remove....8-27
Install....8-27
Complete....8-27

8.23 LICENSE PLATE LAMP

Prepare....8-28
Remove....8-28
Install....8-28
Complete....8-28

8.24 ELECTRONIC CONTROL MODULE (ECM)

Prepare....8-29
Remove....8-29
Install....8-29
Complete....8-29

8.25 COOLING FAN

Prepare....8-30
Remove....8-30
Install....8-30
Complete....8-30

8.26 VEHICLE SPEED SENSOR (VSS)

Prepare....8-31
Remove....8-31
Install....8-31
Complete....8-31

8.27 BANK ANGLE SENSOR

Prepare....8-32
Remove....8-32
Install....8-32
Complete....8-32

8.28 JIFFY STAND SENSOR

Prepare....8-33
Remove....8-33

Install....8-33
Complete....8-33

8.29 BATTERY TRAY

Prepare....8-34
Remove....8-34
Install....8-34
Complete....8-34

8.30 ENGINE GROUND CABLE

Remove....8-35
Install....8-35

8.31 ENGINE WIRE HARNESS

Prepare....8-36
Remove....8-36
Install....8-36
Complete....8-37

8.32 MAIN WIRING HARNESS

Prepare....8-38
Remove....8-38
Install....8-40
Complete....8-42

APPENDIX A CONNECTOR REPAIR

A.1 BOSCH COMPACT 1.1M CONNECTORS

Disconnect and Connect....A-1
Disconnect....A-1
Connect....A-1
Remove Terminal....A-1
Install Terminal....A-1

A.2 DELPHI GT 150 SEALED CONNECTORS

Disconnect and Connect....A-2
Disconnect....A-2
Connect....A-2
Remove Terminal....A-2
Install Terminal....A-2
....A-2

A.3 DEUTSCH DT SEALED CONNECTORS

Disconnect and Connect....A-4
Disconnect....A-4
Connect....A-4
Remove Terminal....A-4
Install Terminal....A-4
Crimp Terminal....A-6

A.4 FURUKAWA QLW SEALED CONNECTORS

Disconnect and Connect....A-8
Disconnect....A-8
Connect....A-8
Remove Terminal....A-8
Install Terminal....A-8

A.5 MOLEX MX 150 SEALED CONNECTORS

Disconnect and Connect....A-9
Disconnect....A-9
Connect....A-9
Remove Terminal....A-9
Install Terminal....A-10
Crimp Terminal....A-10

A.6 SUMITOMO DL SEALED AND MT CONNECTORS

Disconnect and Connect....A-13
Disconnect....A-13
Connect....A-13
Remove Terminal....A-13
Install Terminal....A-13

A.7 SUMITOMO MTW AND MTL UNSEALED CONNECTORS

Disconnect and Connect....A-14
Disconnect....A-14
Connect....A-14
Remove Terminal....A-14
Install Terminal....A-14

A.8 TYCO 070 MULTILOCK UNSEALED CONNECTOR

Disconnect and Connect....A-15
Disconnect....A-15
Connect....A-15
Remove Terminal....A-15
Install Terminal....A-15
Crimp Terminal....A-16

A.9 TYCO GET 64 UNSEALED CONNECTORS

Disconnect and Connect....A-17
Disconnect....A-17
Connect....A-17
Remove Terminal....A-17
Install Terminal....A-18
Crimp Terminal....A-18

A.10 TYCO JUNIOR POWER TIMER UNSEALED CONNECTOR

Disconnect and Connect....A-19
Remove Terminal....A-19
Install Terminal....A-19

A.11 TYCO SEALED TIMER CONNECTOR

Disconnect and Connect....A-20
Disconnect....A-20
Connect....A-20
Remove Terminal....A-20
Install Terminal....A-20

A.12 TYCO SUPER SEAL 1.5 SEALED CONNECTOR

Disconnect and Connect....A-21
Disconnect....A-21
Connect....A-21
Remove Terminal....A-21

TABLE OF CONTENTS

Install Terminal....A-21

A.13 YAZAKI SSD SEALED CONNECTOR

Disconnect and Connect....A-22
Disconnect....A-22
Connect....A-22
Remove Terminal....A-22
Install Terminal....A-22

APPENDIX B WIRING

B.1 COMPONENT LOCATION VIEWS

Component Locations....B-1

B.2 WIRING DIAGRAM INFORMATION

Wiring Diagram Information....B-4
Wire Color Codes....B-4
Wiring Diagram Symbols....B-4
2015 Street Wiring Diagrams....B-6

B.3 CONNECTORS

Connector Locations....B-15
Function/Location....B-15
Place and Color....B-15
Connector Number....B-15
Repair Instructions....B-15
Connector End Views....B-17

APPENDIX C REFERENCE

C.1 CONVERSIONS

Conversion Table....C-1

C.2 FLUID CONVERSION

United States System....C-2
British Imperial System....C-2
Metric System....C-2

C.3 TORQUE CONVERSION

United States System....C-3
Metric System....C-3

C.4 GLOSSARY

Acronyms and Abbreviations....C-4

REFERENCE MATERIAL

TOOLS....I

TORQUE VALUES....III

INDEX....IX

NOTES

SUBJECT **PAGE NO.**
1.1 SAFETY.....1-1

SAFETY

Harley-Davidson service manuals are intended for use by professional, qualified and experienced technicians. Attempting the procedures found within this manual without the proper training, tools and equipment could result in death or injury to you or others. This could also damage the vehicle, or cause the vehicle to operate improperly.

Safety is always the most important consideration when performing any job.

- Always have a complete understanding of the task.
- Use common sense.
- Use tools that are proper for the task.
- Protect yourself and bystanders with approved eye protection.

Harley-Davidson does not evaluate or advise the service trade of every way in which service might be performed, or all possible hazardous consequences of every method, or undertaken such a broad evaluation. Before using a tool not recommended by Harley-Davidson, make sure that technician or rider safety will not be jeopardized as a result.

Warnings against the use of specific service methods which could damage the motorcycle or render it unsafe are stated in this manual. **These warnings are not all-inclusive.** Inadequate safety precautions could result in death or serious injury.

Safety Messages

Statements in this manual preceded by the following words are of special significance.

⚠WARNING

WARNING indicates a potentially hazardous situation which, if not avoided, could result in death or serious injury. (00119a)

⚠CAUTION

CAUTION indicates a potentially hazardous situation which, if not avoided, may result in minor or moderate injury. (00139a)

NOTICE

NOTICE indicates a potentially hazardous situation which, if not avoided, may result in property damage. (00140b)

NOTE

Refers to important information, and is placed in italic type. It is recommended that you take special notice of these items.

Customer Safety

⚠WARNING

The rider's safety depends upon proper motorcycle service and maintenance. If a procedure in this manual is not within your capabilities or you do not have the correct tools, have a Harley-Davidson dealer perform the procedure. Improper service or maintenance could result in death or serious injury. (00627b)

Proper service and repair is important for the safe, reliable operation of all mechanical products. The service procedures recommended and described in this manual are effective methods for performing service operations and are essential to your customer's safety and the reliable and safe operation of your customer's vehicle.

Personal Protection

⚠WARNING

- Always wear safety glasses or goggles when performing service or maintenance procedures. Flying objects or materials can cause serious eye injury or death.
- Wear protective gear that is appropriate to the situation. Helmets, gloves, boots and other protective clothing can prevent serious injury or death.
- Wear ear protection when loud noises are present. Loud noises can damage ears and cause hearing loss. (00628b)

Tool Safety

Some of these service operations require the use of tools specially designed for the purpose. Follow the manufacturer's suggested usage and safety instructions. If using a tool other than that recommended by Harley-Davidson, be sure that the tool is appropriate for the service or maintenance procedure and is being used in accordance with the tool's safety instructions.

Product Safety

⚠WARNING

Read and follow warnings and directions on all products. Failure to follow warnings and directions can result in death or serious injury. (00470b)

- When reference is made to a specific brand name product, tool or instrument, an equivalent product, tool or instrument may be substituted.
- Some referenced or recommended products contain chemicals known to the State of California to cause cancer and birth defects or other reproductive harm as indicated on the product label or at the point of purchase.

Hazardous Materials

⚠WARNING

Read and follow warnings and directions on all products. Failure to follow warnings and directions can result in death or serious injury. (00470b)

- Keep hazardous products out of the reach of children.
- Many products (oils, lubricants, solvents, sealants and cleaners, etc.) can cause death or serious injury if inhaled, absorbed, injected, ingested or improperly contacted. If hazardous contact is made with a product, follow the instructions on the product label and, if necessary, contact poison control or a medical facility.
- Some products are flammable and/or explosive as indicated on the product label or at the point of purchase. Keep these products away from flame and intense heat.
- Some products are corrosive as indicated on the product label. Wear appropriate protective gear to prevent skin contact. Use service covers to prevent damage to cosmetic surfaces on the motorcycle.
- Some products contain chemicals known to the State of California to cause cancer and birth defects or other reproductive harm as indicated on the product label or at the point of purchase.

Fuel

⚠WARNING

Keep gasoline away from ignition sources. Gasoline is extremely flammable and highly explosive and, if ignited, could result in death or serious injury. (00634b)

- Stop the engine when refueling or servicing the fuel system.
- Do not allow open flame, sparks, radiant heat or other ignition sources near gasoline.
- Do not store motorcycle with gasoline in tank within the home or garage where ignition sources, such as open flames, pilot lights, sparks or electric motors are present.
- Do not overfill fuel tank. Allow for fuel expansion.
- Do not use gasoline as a cleaner or solvent.
- Gasoline can leak or drain from loosened or improperly tightened fuel fittings or from removed fuel components.
- Clean spilled gasoline immediately. Dispose of waste materials properly.

Battery

⚠WARNING

Read and follow warnings and directions on all products. Failure to follow warnings and directions can result in death or serious injury. (00470b)

- Batteries contain sulfuric acid, which could cause severe burns to eyes and skin. Wear a protective face shield, rubberized gloves and protective clothing when working with batteries. Keep batteries out of the reach of children.
- Do not remove warning label attached to top of battery.
- Batteries, battery posts, terminals and related accessories contain lead and lead compounds, and other chemicals known to the State of California to cause cancer, and birth defects or other reproductive harm. Wash hands after handling.

Coolant

- Coolant contains toxic chemicals which could cause death or serious injuries if ingested. Do not induce vomiting. Call a physician immediately.
- Irritation to skin or eyes can occur from vapors or direct contact. Flush thoroughly with water if contact is made.
- Use in a well ventilated area.

Hydraulic (Brake) Fluid

- Direct contact with brake fluid to the eyes can cause irritation. Flush thoroughly with water if contact is made.
- Do not swallow brake fluid. Swallowing brake fluid can cause digestive discomfort. Call a physician immediately.
- Brake fluid will cause cosmetic damage to painted surfaces. Always use caution and protect surfaces from spills whenever brake work is performed.

Engine Oil

- Prolonged or repeated contact with used motor oil may be harmful to skin and could cause skin cancer. Promptly wash affected areas with soap and water.
- Do not swallow oil. If swallowed, do not induce vomiting. Contact a physician immediately.
- Direct contact with eyes can cause irritation. Flush thoroughly with water if contact is made. Contact a physician if irritation persists.

SUBJECT	PAGE NO.
2.1 FASTENER TORQUE VALUES	2-1
2.2 GENERAL	2-2
2.3 MAINTENANCE SCHEDULE	2-3
2.4 FUEL AND OIL	2-5
2.5 REPLACE ENGINE OIL AND FILTER	2-7
2.6 INSPECT TIRES	2-9
2.7 LUBRICATE CABLE AND CHASSIS	2-11
2.8 INSPECT BRAKES	2-12
2.9 CHECK AND REPLACE BRAKE FLUID	2-17
2.10 CHECK AND ADJUST THROTTLE CABLES	2-18
2.11 CHECK AND ADJUST CLUTCH	2-19
2.12 ADJUST BRAKE LINKAGE	2-20
2.13 REBUILD FRONT FORK AND REPLACE OIL	2-21
2.14 ADJUST STEERING HEAD BEARINGS	2-22
2.15 INSPECT RADIATOR AND COOLANT	2-24
2.16 INSPECT FUEL LINES AND FITTINGS	2-26
2.17 INSPECT JIFFY STAND	2-27
2.18 INSPECT REAR FORK BEARING	2-28
2.19 INSPECT AND ADJUST DRIVE BELT AND SPROCKETS	2-29
2.20 INSPECT REAR WHEEL COMPENSATOR	2-32
2.21 INSPECT REAR SHOCK ABSORBER BUSHINGS	2-33
2.22 INSPECT EXHAUST SYSTEM	2-34
2.23 INSPECT AIR FILTER	2-35
2.24 INSPECT AND ADJUST VALVE LASH	2-36
2.25 INSPECT BATTERY	2-38
2.26 REPLACE SPARK PLUGS	2-41
2.27 STORAGE	2-43
2.28 TROUBLESHOOTING	2-44

NOTES

FASTENER TORQUE VALUES 2.1

FASTENER TORQUE VALUES IN THIS CHAPTER

The table below lists torque values for all fasteners presented in this chapter.

FASTENER	TORQUE VALUE		NOTES
Air filter bracket nuts	6.0-8.0 Nm	54-70 **in-lbs**	2.23 INSPECT AIR FILTER, Install
Air filter cover screw	6.0-8.0 Nm	54-70 **in-lbs**	2.23 INSPECT AIR FILTER, Install
Battery ground stud	6.0-10.0 Nm	54-88 **in-lbs**	2.25 INSPECT BATTERY, Install
Electrical panel screw	2.3-3.3 Nm	21-29 **in-lbs**	2.25 INSPECT BATTERY, Install
Engine oil drain plug	20.0-25.0 Nm	15-18 ft-lbs	2.5 REPLACE ENGINE OIL AND FILTER, Change Oil and Oil Filter
Fork stem pinch screw	50.0-60.0 Nm	37-44 ft-lbs	2.14 ADJUST STEERING HEAD BEARINGS, Fall-Away
Fork stem screw, first torque	22.6 Nm	200**in-lbs**	2.14 ADJUST STEERING HEAD BEARINGS, Fall-Away
Fork stem screw, second torque	8.5 Nm	75**in-lbs**	2.14 ADJUST STEERING HEAD BEARINGS, Fall-Away
Front brake master cylinder reservoir cover screw	2.0-4.0 Nm	18-35 **in-lbs**	2.8 INSPECT BRAKES, Replace Front Brake Pads
Front brake pad pin	14.8-19.5 Nm	131-173 **in-lbs**	2.8 INSPECT BRAKES, Replace Front Brake Pads
Lower fork bracket pinch screw	34.3-39.2 Nm	26-28 ft-lbs	2.14 ADJUST STEERING HEAD BEARINGS, Fall-Away
Negative battery terminal screw	6.8-7.9 Nm	60-70 **in-lbs**	2.25 INSPECT BATTERY, Install
Positive battery terminal screw	6.8-7.9 Nm	60-70 **in-lbs**	2.25 INSPECT BATTERY, Install
Radiator shroud screw	9.0-11.0 Nm	80-97 **in-lbs**	2.15 INSPECT RADIATOR AND COOLANT, Clean Radiator
Rear brake master cylinder reservoir cover screw	2.0-4.0 Nm	18-35 **in-lbs**	2.8 INSPECT BRAKES, Replace Rear Brake Pads
Rear brake pad pin	14.8-19.5 Nm	131-173 **in-lbs**	2.8 INSPECT BRAKES, Replace Rear Brake Pads
Rear brake pushrod jamnut	7.0-9.0 Nm	62-79 **in-lbs**	2.12 ADJUST BRAKE LINKAGE, Adjust
Spark plug	10.0-12.0 Nm	89-106 **in-lbs**	2.26 REPLACE SPARK PLUGS, Install
Valve adjuster jamnut	10.0-12.0 Nm	89-106 **in-lbs**	2.24 INSPECT AND ADJUST VALVE LASH, Inspect and Adjust

SERVICING A NEW MOTORCYCLE

⚠WARNING

Perform the service and maintenance operations as indicated in the regular service interval table. Lack of regular maintenance at the recommended intervals can affect the safe operation of your motorcycle, which could result in death or serious injury. (00010a)

Perform necessary set-up tasks before customer delivery. See applicable model year predelivery and set-up instructions.

The performance of new motorcycle initial service is required to keep warranty in force and to verify proper emissions systems operation. See 2.3 MAINTENANCE SCHEDULE.

Inspect motorcycle regularly for additional maintenance needs. Routinely check components between regular maintenance intervals. Always inspect motorcycle after periods of storage before riding.

Perform all of the checks in the PRE-RIDING CHECKLIST in the owner's manual following any service procedure. Operate the motorcycle to perform any final check or adjustments. If all is correct, the vehicle is ready to return to the customer.

SECURE THE MOTORCYCLE FOR SERVICE

PART NUMBER	TOOL NAME
HD-45968	FAT JACK

⚠WARNING

Be sure to check capacity rating and condition of hoists, slings, chains and cables before use. Exceeding capacity ratings or using lifting devices that are in poor condition can lead to an accident, which could result in death or serious injury. (00466c)

Always use blocking or proper stands to support motorcycle.

Set Motorcycle Upright

1. Place motorcycle upright on a level surface or suitable lift if available.
2. Verify that motorcycle is level.
3. Secure with tie-downs.

Raise Front or Rear Wheel for Service

1. Verify that motorcycle is level.
2. Use a FAT JACK (Part No. HD-45968) or similar to raise the motorcycle to service a front or rear wheel.
3. Secure with tie-downs.
4. If necessary, remove shock absorbers and raise the rear fork for service.

GENERAL

Perform the required maintenance at each regular service interval. Refer to Table 2-1.

Table 2-1. Regular Service Intervals: 2015 Harley-Davidson Street Models

ITEM SERVICED	PROCEDURE	1000 MI 1600 KM	5000 MI 8000 KM	10000 MI 16000 KM	15000 MI 24000 KM	20000 MI 32000 KM	25000 MI 40000 KM	30000 MI 48000 KM	35000 MI 56000 KM	40000 MI 64000 KM	45000 MI 72000 KM	50000 MI 80000 KM	NOTES
Engine oil and filter	Replace	X	X	X	X	X	X	X	X	X	X	X	1
Front tire	Check pressure, inspect tread	X	X	X	X	X	X	X	X	X	X	X	1
Front brake pads and discs	Check for wear	X	X	X	X	X	X	X	X	X	X	X	
Front brake caliper	Inspect and lubricate pins and bushings	X	X	X	X	X	X	X	X	X	X	X	2
Front brake system	Check for leaks, contact or abrasion	X	X	X	X	X	X	X	X	X	X	X	1
	Repair as necessary	X	X	X	X	X	X	X	X	X	X	X	2
Front brake fluid	Check level in sight glass	X	X	X	X	X	X	X	X	X	X	X	
	Flush and replace fluid	Flush system and replace DOT 4 hydraulic brake fluid every two years											2
Throttle cables	Check and adjust	X	X	X	X	X	X	X	X	X	X	X	2
	Lubricate	X	X	X	X	X	X	X	X	X	X	X	2
Brake and clutch controls	Check and adjust	X	X	X	X	X	X	X	X	X	X	X	2
	Lubricate	X	X	X	X	X	X	X	X	X	X	X	2
Front fork	Rebuild and replace fork oil											X	2
Steering head bearings	Adjust	X				X				X			2
	Lubricate					X				X			2
Radiator	Clean	X	X	X	X	X	X	X	X	X	X	X	
Cooling system	Check for leaks and check clamps for tightness	X	X	X	X	X	X	X	X	X	X	X	
	Check coolant level	X	X	X	X	X	X	X	X	X	X	X	
	Check coolant freeze point	X	X	X	X	X	X	X	X	X	X	X	2
	Replace coolant	Replace fluid every 48,000 km (30,000 mi)											2
Fuel lines and fittings	Check for leaks, contact or abrasion	X	X	X	X	X	X	X	X	X	X	X	1
	Repair as necessary	X	X	X	X	X	X	X	X	X	X	X	2
Jiffy stand	Check and lubricate	X	X	X	X	X	X	X	X	X	X	X	2, 3
Shift and brake levers	Clean and lubricate, inspect for wear					X				X			2
Rear fork bearing	Inspect					X				X			2
Drive belt and sprockets	Inspect, adjust belt	X	X	X	X	X	X	X	X	X	X	X	2
Rear tire	Check pressure, inspect tread	X	X	X	X	X	X	X	X	X	X	X	1
Rear shock absorber bushings	Inspect for wear and cracks					X				X			2
Rear brake pads and disc	Check for wear	X	X	X	X	X	X	X	X	X	X	X	1

Table 2-1. Regular Service Intervals: 2015 Harley-Davidson Street Models

ITEM SERVICED	PROCEDURE	1000 MI 1600 KM	5000 MI 8000 KM	10000 MI 16000 KM	15000 MI 24000 KM	20000 MI 32000 KM	25000 MI 40000 KM	30000 MI 48000 KM	35000 MI 56000 KM	40000 MI 64000 KM	45000 MI 72000 KM	50000 MI 80000 KM	NOTES
Rear brake system	Check for leaks, contact or abrasion	X	X	X	X	X	X	X	X	X	X	X	1
	Repair as necessary	X	X	X	X	X	X	X	X	X	X	X	2
Rear brake caliper	Inspect and lubricate pins and bushings	X	X	X	X	X	X	X	X	X	X	X	2
Rear brake fluid	Check level in sight glass	X	X	X	X	X	X	X	X	X	X	X	
	Flush and replace fluid	Flush system and replace DOT 4 hydraulic brake fluid every two years											2
Exhaust system	Check for leaks, cracks and loose or missing fasteners or exhaust shields	X	X	X	X	X	X	X	X	X	X	X	1, 3
	Repair as necessary	X	X	X	X	X	X	X	X	X	X	X	2
Air cleaner filter	Inspect, service as required	X	X	X	X	X	X	X	X	X	X	X	3
Fuel cap lock	Lubricate	X	X	X	X	X	X	X	X	X	X	X	3
Valve lash	Inspect, adjust if necessary				X			X			X		2, 4
Battery	Check and clean	Check battery, terminal torque and clean connections annually.											1
Spark plugs	Replace	Replace every two years or every 48,000 km (30,000 mi), whichever comes first.											
Electrical equipment and switches	Check operation	X	X	X	X	X	X	X	X	X	X	X	
Road test	Verify component and system functions	X	X	X	X	X	X	X	X	X	X	X	
NOTES:	1. Perform annually or at specified intervals, whichever comes first. 2. Should be performed by an authorized Harley-Davidson dealer, unless you have the proper tools, service data and are mechanically qualified. 3. Perform maintenance more frequently in severe riding conditions (such as extreme temperatures, dusty environments, mountainous or rough roads, long storage conditions, short runs, heavy stop/go traffic or poor fuel quality). 4. Could vary with frequency of operation and riding style.												

FUEL

Always use a good quality unleaded gasoline. Octane ratings are usually found on the pump. Refer to Table 2-2.

⚠WARNING

Avoid spills. Slowly remove filler cap. Do not fill above bottom of filler neck insert, leaving air space for fuel expansion. Secure filler cap after refueling. Gasoline is extremely flammable and highly explosive, which could result in death or serious injury. (00028a)

⚠WARNING

Use care when refueling. Pressurized air in fuel tank can force gasoline to escape through filler tube. Gasoline is extremely flammable and highly explosive, which could result in death or serious injury. (00029a)

Modern service station pumps dispense a high flow of gasoline into a motorcycle fuel tank making air entrapment and pressurization a possibility.

Table 2-2. Minimum Octane Ratings

SPECIFICATION	RATING
Pump Octane (R+M)/2	87 (91 RON)

GASOLINE BLENDS

Harley-Davidson motorcycles are designed to get the best performance and efficiency using unleaded gasoline. Most gasoline is blended with alcohol and/or ether to create oxygenated blends. The type and amount of alcohol or ether added to the fuel is important.

NOTICE

Do not use gasoline that contains methanol. Doing so can result in fuel system component failure, engine damage and/or equipment malfunction. (00148a)

- Gasoline/METHYL TERTIARY BUTYL ETHER (MTBE) blends are a mixture of gasoline and as much as 15 percent MTBE. Gasoline/MTBE blends use in your motorcycle is approved.
- ETHANOL fuel is a mixture of ethanol (grain alcohol) and unleaded gasoline and can have an impact on fuel mileage. Fuels with an ethanol content of up to 10 percent may be used in your motorcycle without affecting vehicle performance. U.S. EPA regulations currently indicate that fuels with 15 percent ethanol (E15) are restricted from use in motorcycles at the time of this publication. Some motorcycles are calibrated to operate with higher ethanol concentrations to meet the fuel standards in certain countries.
- REFORMULATED OR OXYGENATED GASOLINES (RFG) describes gasoline blends that are specifically designed to burn cleaner than other types of gasoline. This results in fewer tailpipe emissions. They are also formulated to evaporate less when filling the tank. Reformulated gasolines use additives to oxygenate the gas. Your motorcycle will run normally using this type of fuel. Harley-Davidson recommends using it whenever possible as an aid to cleaner air in our environment.
- Do not use racing fuel or fuel containing methanol. Use of these fuels will damage the fuel system.
- Using fuel additives other than those approved for use by Harley-Davidson may damage the engine, fuel system and other components.

Some gasoline blends might adversely affect starting, performance or fuel efficiency. If any of these problems are experienced, try a different brand of gasoline or gasoline with a higher octane blend.

ENGINE LUBRICATION

⚠CAUTION

Prolonged or repeated contact with used motor oil may be harmful to skin and could cause skin cancer. Promptly wash affected areas with soap and water. (00358b)

⚠CAUTION

If engine oil is swallowed, do not induce vomiting. Contact a physician immediately. In case of contact with eyes, immediately flush with water. Contact a physician if irritation persists. (00357d)

NOTICE

Do not switch lubricant brands indiscriminately because some lubricants interact chemically when mixed. Use of inferior lubricants can damage the engine. (00184a)

Engine oil is a major factor in the performance and service life of the engine. Always use the proper grade of oil for the lowest temperature expected before the next scheduled oil change. Refer to Table 2-3.

This motorcycle was originally equipped with GENUINE HARLEY-DAVIDSON H-D 360 MOTORCYCLE OIL 20W50. H-D 360 is the preferred oil under normal operating conditions. If operation under extreme cold or heat are expected, refer to Table 2-3 for alternative choices.

If necessary and H-D 360 is not available, add oil certified for diesel engines. Acceptable designations include: CH-4, CI-4 and CJ-4. The preferred viscosities, in descending order are: 20W50, 15W40 and 10W40.

At the first opportunity, see an authorized dealer to change back to 100 percent Harley-Davidson oil.

Table 2-3. Recommended Engine Oils

TYPE	VISCOSITY	RATING	LOWEST AMBIENT TEMPERATURE	COLD WEATHER STARTS BELOW 10 °C (50 °F)
Screamin' Eagle SYN3 Full Synthetic Motorcycle Lubricant	SAE 20W50	HD 360	Above -1 °C (30 °F)	Excellent
Genuine Harley-Davidson H-D 360 Motorcycle Oil	SAE 20W50	HD 360	Above 4 °C (40 °F)	Good
Genuine Harley-Davidson H-D 360 Motorcycle Oil	SAE 10W40	HD 360	Below 4 °C (40 °F)	Excellent

WINTER LUBRICATION

Change engine oil often in colder climates. If motorcycle is frequently used for trips less than 24 km (15 mi), in ambient temperatures below 16 °C (60 °F), reduce oil change intervals to 2400 km (1500 mi).

NOTE

The further below freezing the temperature drops, the shorter the oil change interval should be.

Water vapor is a normal by-product of combustion in any engine. During cold weather operation, some water vapor condenses to liquid form on the cool metal surfaces inside the engine. In freezing weather this water will become slush or ice. Over time, accumulated slush or ice may block the oil lines and cause engine damage.

If the engine is run frequently and allowed to thoroughly warm up, most of this water will become vapor again and will be blown out through the crankcase breather.

If the engine is not run frequently and not allowed to thoroughly warm up, this water will accumulate, mix with the engine oil and form a sludge that is harmful to the engine.

CHECK ENGINE OIL LEVEL

Cold Check

1. Set vehicle upright.
2. See Figure 2-1. Remove dipstick (1) and wipe clean.
3. Insert the dipstick and tighten.
4. Remove the dipstick. Verify that there is oil on the dipstick.
5. If oil is not visible, add only enough oil to bring the level to the bottom of the dipstick.

Hot Check

NOTICE

Do not allow hot oil level to fall below Add/Fill mark on dipstick. Doing so can result in equipment damage and/or equipment malfunction. (00189a)

NOTICE

Do not overfill oil. Doing so can result in oil carryover to the air cleaner leading to equipment damage and/or equipment malfunction. (00190b)

1. Run motorcycle until engine is at normal operating temperature.
2. Set vehicle upright.
3. See Figure 2-1. Remove dipstick (1) and wipe clean.
4. Insert the dipstick and tighten.
5. Remove the dipstick. Verify that the oil level is within the "X" mark on the dipstick.
6. If oil level is below the "X" mark, add only enough oil to bring the level to the mark.

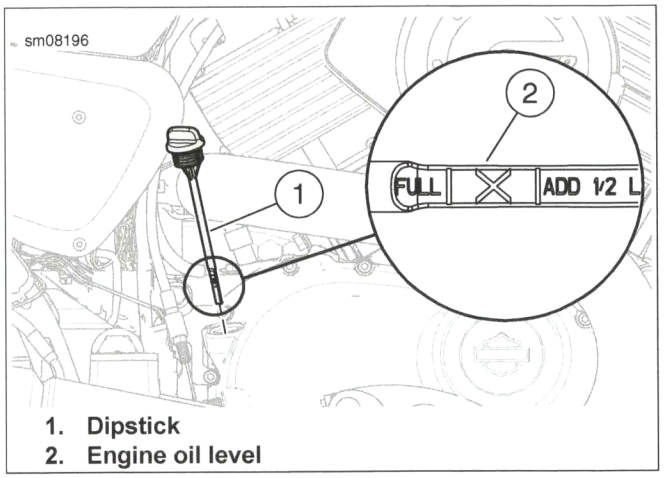

1. **Dipstick**
2. **Engine oil level**

Figure 2-1. Engine Oil Level

CHANGE OIL AND OIL FILTER

PART NUMBER	TOOL NAME
HD-51453	OIL FILTER WRENCH

FASTENER	TORQUE VALUE	
Engine oil drain plug	20.0-25.0 Nm	15-18 ft-lbs

⚠WARNING

Be sure that no lubricants or fluids get on tires, wheels or brakes when changing fluid. Traction can be adversely affected, which could result in loss of control of the motorcycle and death or serious injury. (00047d)

1. See Figure 2-2. Drain engine oil.
   a. Run motorcycle until engine is at normal operating temperature.
   b. Turn off engine.
   c. Loosen dipstick.
   d. Remove the engine oil drain plug. Discard O-ring.
   e. Allow oil to drain completely.
2. Remove radiator shroud. See 7.11 RADIATOR
3. See Figure 2-3. Remove and discard oil filter.
   a. Remove the oil filter using OIL FILTER WRENCH (Part No. HD-51453).
   b. Discard filter.
   c. Clean the oil filter mount flange of any old gasket material.

NOTE

Do NOT use oil filter wrench for installation.

4. Install **new** oil filter.
   a. Lubricate gasket of **new** oil filter with clean engine oil.
   b. Install **new** oil filter. Hand-tighten oil filter one-half to three-quarters of a turn after gasket initially contacts the filter mounting surface.
5. Install engine oil drain plug and **new** O-ring. Tighten to 20.0-25.0 Nm (15-18 ft-lbs).

NOTICE

Do not overfill oil. Doing so can result in oil carryover to the air cleaner leading to equipment damage and/or equipment malfunction. (00190b)

6. Add **new** engine oil.
   a. Initially add 2.4 liters (2.5 quarts) of engine oil.
   b. Perform engine oil level **cold check**.
   c. Start engine and check for oil leaks around drain plug and oil filter.

7. Install radiator shroud. See 7.11 RADIATOR
8. Perform engine oil level **hot check**.

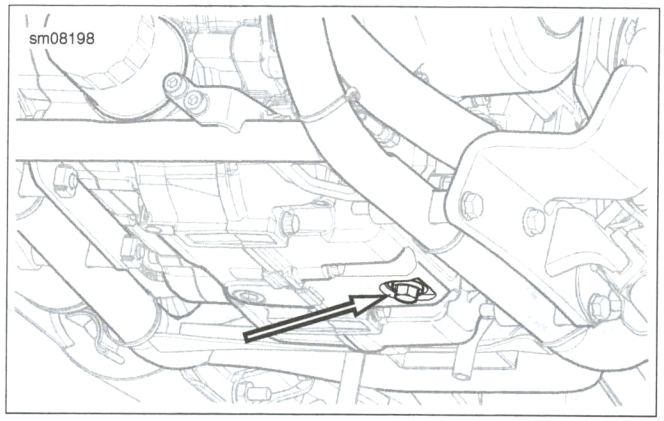

Figure 2-2. Engine Oil Drain Plug

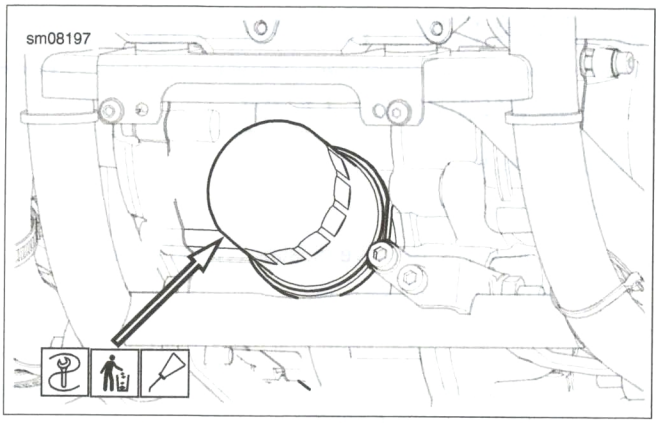

Figure 2-3. Engine Oil Filter

GENERAL

⚠WARNING

Match tires, tubes, rim strips or seals, air valves and caps to the correct wheel. Contact a Harley-Davidson dealer. Mismatching can lead to tire damage, allow tire slippage on the wheel or cause tire failure, which could result in death or serious injury. (00023c)

⚠WARNING

Harley-Davidson front and rear tires are not the same. Interchanging front and rear tires can cause tire failure, which could result in death or serious injury. (00026a)

NOTES

- *Tubeless tires are used on all Harley-Davidson cast wheels.*
- *Tire sizes are molded on the tire sidewall. Inner tube sizes are printed on the tube.*
- *Store **new** tires on a horizontal tire rack. Avoid stacking **new** tires in a vertical stack. The weight of the stack compresses the tires and crushes the beads.*

Tire Pressure

⚠WARNING

Be sure tires are properly inflated, balanced, undamaged, and have adequate tread. Inspect your tires regularly and see a Harley-Davidson dealer for replacements. Riding with excessively worn, unbalanced, improperly inflated, overloaded or damaged tires can lead to tire failure and adversely affect stability and handling, which could result in death or serious injury. (00014b)

Check tire pressure:

- As part of the pre-ride checklist.
- At every scheduled service interval.

1. Check tire pressures when tires are cold. Compare with specifications. See Table 2-4.

NOTE

Harley-Davidson does not perform any testing with only nitrogen in tires. Harley-Davidson neither recommends nor discourages the use of pure nitrogen to inflate tires.

Tread

⚠WARNING

Replace tire immediately with a Harley-Davidson specified tire when wear bars become visible or only 1/32 in (0.8 mm) tread depth remains. Riding with a worn tire could result in death or serious injury. (00090c)

Check tire tread:

- As part of the pre-ride checklist.
- At every scheduled service interval.

1. Inspect each tire for punctures, cuts and breaks.
2. See Figure 2-4 or Figure 2-5. Inspect each tire for wear. Replace tires before they reach the tread wear indicator bars.

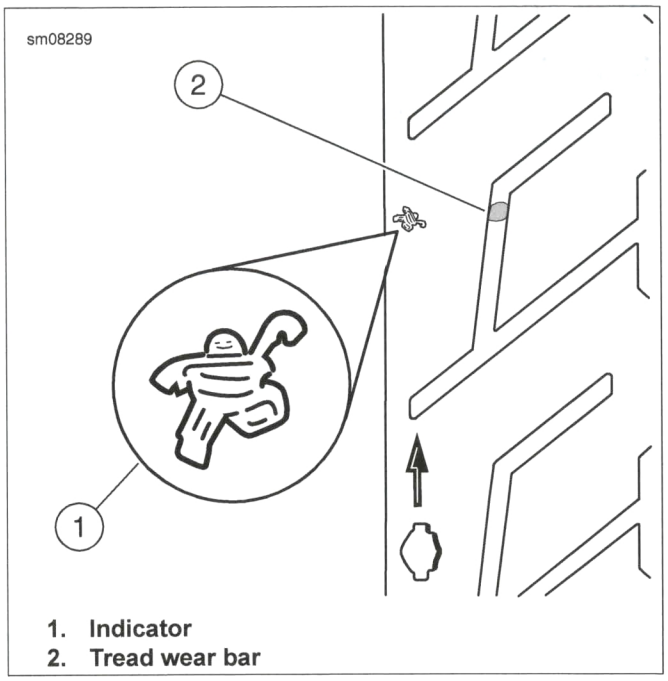

1. Indicator
2. Tread wear bar

Figure 2-4. Tread Wear Indicator: Michelin Tires

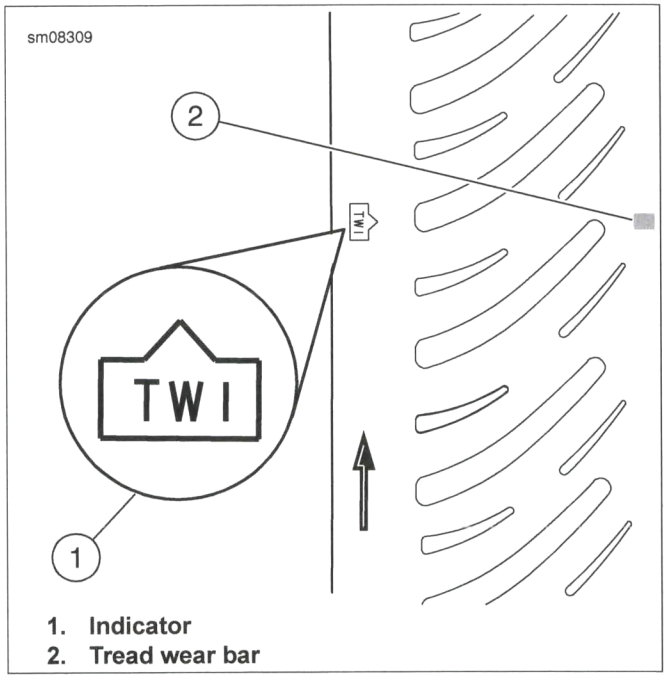

1. Indicator
2. Tread wear bar

Figure 2-5. Tread Wear Indicator: MRF Tires

Table 2-4. Tires and Tire Pressure

MODEL	MOUNT	SIZE	SPECIFIED TIRE	PRESSURE (COLD)	
				kPa	PSI
XG500/XG750	Front	17 in	MRF Zapper (India only): 100/80-17	207	30
XG500/XG750	Rear	15 in	MRF Zapper (India only): 150/70/15 67H	276	40
XG500/XG750	Front	17 in	Michelin Scorcher 11: 100/80 R17	234	34
XG500/XG750	Rear	15 in	Michelin Scorcher 11: 140/75 R15	290	42

REPLACE

Inspect

Tread wear indicator bars appear on tire tread surfaces when 0.8 mm (0.031 in) or less of tire tread remains. Always replace tires before the tread wear indicator bars appear on the surface of the tire.

See Figure 2-4 or Figure 2-5. The locations of tread wear indicator bars are identified by the TWI marks on the tire sidewalls.

When To Replace Tires

New tires are needed if:

- Tread wear indicator bars become visible on the tread surfaces.
- Tire cords or fabric become visible through cracked sidewalls, snags or deep cuts.
- A bump, bulge or split in the tire.
- A puncture, cut or other damage to the tire that cannot be repaired.

See 3.9 TIRES for replacement instructions.

GENERAL

Inspect and lubricate the following items according to 2.3 MAINTENANCE SCHEDULE.

If service is on muddy or dusty roads, clean and lubricate at shorter intervals.

LUBRICATION POINTS

See Figure 2-6 for general locations of lubrication points.

Cables and Levers

1. **Throttle cables:** Pour two drops of HARLEY® LUBE into each cable housing. See 3.24 THROTTLE CONTROL.
2. **Clutch cable:** Pour two drops of HARLEY® LUBE into clutch cable housing. See 3.23 CLUTCH CONTROL.
3. **Clutch hand lever:** Use HARLEY® LUBE on clutch lever pivot pin hole. See 3.23 CLUTCH CONTROL.
4. **Gear Shift Lever:** Use SPECIAL PURPOSE GREASE on gear shift lever pivot pin hole. See 3.34 RIDER FOOT CONTROLS.
5. **Front brake hand lever:** Use G40M BRAKE GREASE on front brake lever pivot pin hole and end of piston that contacts brake lever. See 3.11 FRONT BRAKE MASTER CYLINDER.
6. **Rear brake lever:** Use G40M BRAKE GREASE on rear brake lever pivot pin hole and end of pushrod that contacts the master cylinder. See 3.13 REAR BRAKE MASTER CYLINDER and 3.34 RIDER FOOT CONTROLS.

Jiffy Stand

7. **Jiffy Stand:** Lubricate cam stop pin with SPECIAL PURPOSE GREASE. See 3.37 JIFFY STAND.

Steering Head Bearings

8. **Steering Head Bearings:** Lubricate steering head bearings with SPECIAL PURPOSE GREASE. See 2.14 ADJUST STEERING HEAD BEARINGS.

Brake Caliper Pins and Bushings

9. **Brake Caliper Pins and Bushings:** Lubricate brake caliper pins and bushings with DOW CORNING MOLY 44 BRAKE PIN GREASE. See 3.12 FRONT BRAKE CALIPER and 3.14 REAR BRAKE CALIPER.

Fuel Cap Lock

10. **Fuel Cap Lock:** Lubricate fuel cap lock with HARLEY® LUBE.

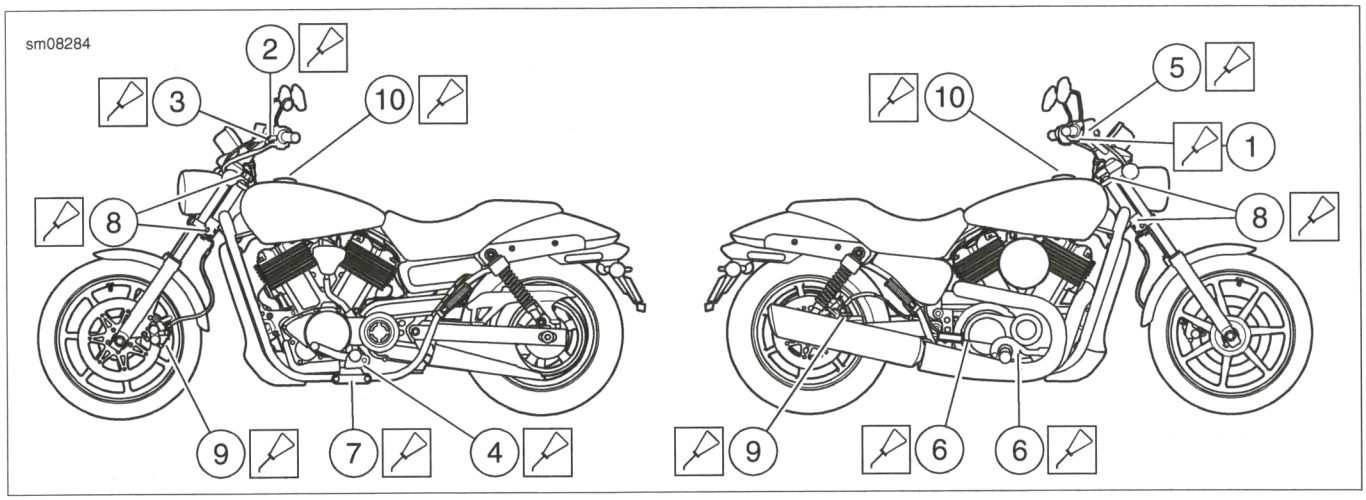

Figure 2-6. Lubrication Points

INSPECT

Brake Caliper Pins and Bushings

For this scheduled maintenance procedure, see 3.12 FRONT BRAKE CALIPER or 3.14 REAR BRAKE CALIPER.

Brake Lines

For this scheduled maintenance procedure, see 3.12 FRONT BRAKE CALIPER.

Brake Pad Thickness

⚠WARNING

Always replace brake pads in complete sets for correct and safe brake operation. Improper brake operation could result in death or serious injury. (00111a)

1. See Figure 2-7. Measure brake pad thickness (1) above backplate (2).
2. Compare measurements to specifications. Refer to Table 2-5.
3. Replace front or rear brake pads if pad thickness is below specification. See 3.12 FRONT BRAKE CALIPER or 3.14 REAR BRAKE CALIPER.

Brake Disc Thickness, Lateral Runout and Warping

1. See Figure 2-7. Measure brake disc thickness.
2. Compare measurements to specifications. Refer to Table 2-5.
3. Check brake disc for lateral runout and warping.
   a. Measure brake disc runout using a dial indicator mounted to a stationary surface.
   b. Maximum brake disc lateral runout is 0.2 mm (0.008 in) when measured near the outside diameter of the disc.
4. Replace front or rear brake discs if disc thickness is below specification or disc runout is beyond specification. See 3.4 FRONT WHEEL or 3.5 REAR WHEEL.

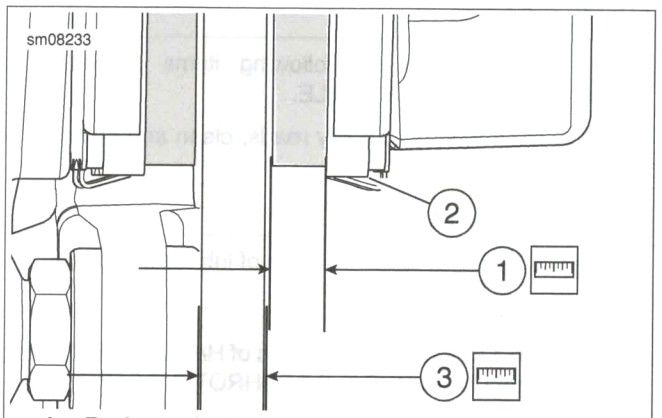

1. **Brake pad thickness**
2. **Backplate**
3. **Brake disc thickness**

Figure 2-7. Brake Thickness

Table 2-5. Brake Specifications

MINIMUM THICKNESS	mm	in
Brake pads	1.5	0.06
Front brake disc	4.6	0.18
Rear brake disc	5.0	0.19

REPLACE FRONT BRAKE PADS

FASTENER	TORQUE VALUE	
Front brake pad pin	14.8-19.5 Nm	131-173 **in-lbs**
Front brake master cylinder reservoir cover screw	2.0-4.0 Nm	18-35 **in-lbs**

Remove

NOTICE

D.O.T. 4 brake fluid will damage painted and body panel surfaces it comes in contact with. Always use caution and protect surfaces from spills whenever brake work is performed. Failure to comply can result in cosmetic damage. (00239b)

1. Set motorcycle upright. See 2.2 GENERAL, Secure the Motorcycle for Service.
2. Turn handlebar to level reservoir.

⚠WARNING

Clean filler cap before removing. Use only D.O.T. 4 brake fluid from a sealed container. Contaminated fluid can adversely affect braking, which could result in death or serious injury. (00504c)

NOTICE

Do not allow dirt or debris to enter the master cylinder reservoir. Dirt or debris in the reservoir can cause improper operation and equipment damage. (00205c)

3. See Figure 2-8. Remove front brake master cylinder cover.
   a. Remove screws (5).
   b. Remove reservoir cover (4).
   c. Remove diaphragm plate (3) and diaphragm (2) from master cylinder reservoir (1).
4. Remove front brake caliper bracket and front brake caliper. See 3.12 FRONT BRAKE CALIPER.
5. See Figure 2-9. Remove front brake pads.
   a. Support caliper (3).

NOTE

Fluid level can rise above maximum fill level as pistons are pressed into their bores. Remove fluid as necessary.

   b. Press brake pads (1) apart to press pistons back into their bores.
   c. Remove brake pad pin (3).
   d. Remove brake pads.

Inspect

1. See Figure 2-9. Inspect pad pin for wear.
   a. Measure pad pin diameter in an unworn area
   b. Measure pad pin diameter in a worn area.
   c. Replace pin if wear exceeds 0.38 mm (0.015 in).
2. Inspect brake pad spring (6) and slider (5) for wear. Replace as necessary.

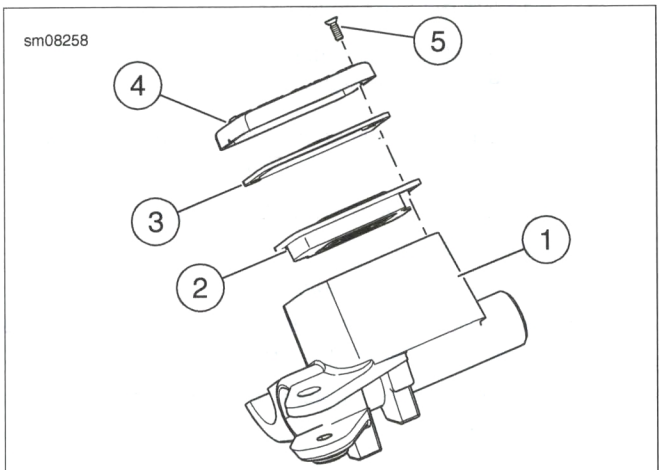

1. **Master cylinder reservoir**
2. **Diaphragm**
3. **Diaphragm plate**
4. **Reservoir cover**
5. **Screw (2)**

Figure 2-8. Front Brake Master Cylinder Reservoir Assembly

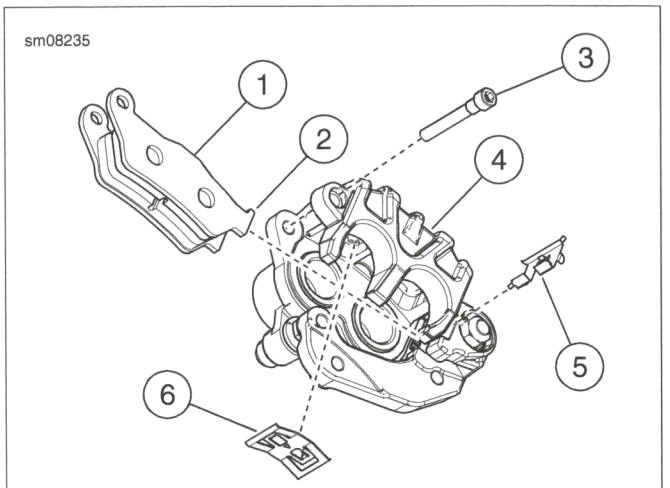

1. **Brake pads (2)**
2. **Brake pad mounting tab**
3. **Brake pad pin**
4. **Front brake caliper**
5. **Slider**
6. **Brake pad spring**

Figure 2-9. Front Brake Pads

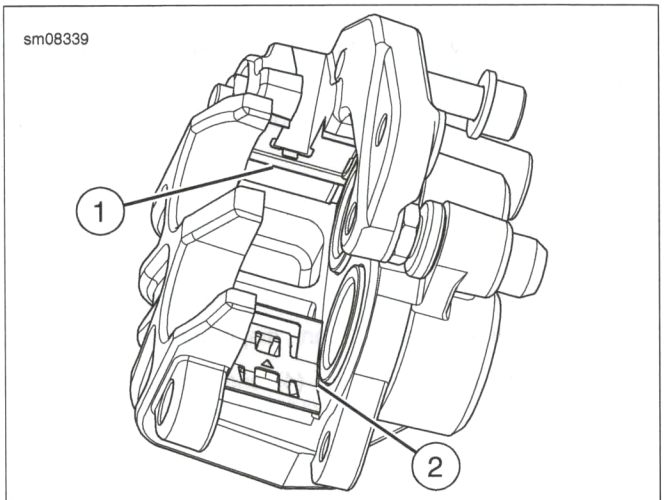

1. **Slider**
2. **Brake pad spring**

Figure 2-10. Brake Pad Spring

Install

1. See Figure 2-10. Install slider (1) and brake pad spring (2).

2. See Figure 2-9. Install front brake pads.
   a. Install **new** piston-side brake pad (1).
   b. Install pad mounting tab (2) to slider (5).
   c. Press pad against pistons.
   d. Install **new** wheel-side brake pad.
   e. Install pad mounting tab to slider.
   f. Press pad against mounting bracket.
   g. Align brake pads against brake pad spring (6).
3. Install pad pin.
   a. Press wheel-side pad against brake pad spring.
   b. Insert brake pad pin through caliper and brake pad.
   c. Press piston-side pad against brake pad spring.
   d. Install brake pad pin.
4. Install caliper and bracket. See 3.12 FRONT BRAKE CALIPER.
5. Tighten pad pin to 14.8-19.5 Nm (131-173 **in-lbs**).

⚠WARNING

After servicing brakes and before moving motorcycle, pump brakes to build brake system pressure. Insufficient pressure can adversely affect brake performance, which could result in death or serious injury. (00279a)

6. Squeeze front brake lever to push pistons against brake pad.
7. Check fluid level in brake reservoir. Add enough DOT 4 BRAKE FLUID to reservoir to bring fluid level to maximum fill level.
8. See Figure 2-8. Install front brake master cylinder cover.
   a. Install diaphragm (2) and diaphragm plate (3).
   b. Install reservoir cover (4) and screws (5). Tighten screws to 2.0-4.0 Nm (18-35 **in-lbs**).

NOTE

*Avoid making hard stops for first 160 km (100 mi) to allow **new** pads to become conditioned to brake discs.*

⚠WARNING

After repairing the brake system, test brakes at low speed. If brakes are not operating properly, testing at high speeds can cause loss of control, which could result in death or serious injury. (00289a)

⚠WARNING

Be sure that all lights and switches operate properly before operating motorcycle. Low visibility of rider can result in death or serious injury. (00316a)

9. Test brakes.
   a. Check operation of rear lamps.
   b. Test ride motorcycle. Repeat the bleed procedure if brakes feel spongy. See 3.16 BLEED BRAKES.

REPLACE REAR BRAKE PADS

FASTENER	TORQUE VALUE	
Rear brake pad pin	14.8-19.5 Nm	131-173 **in-lbs**
Rear brake master cylinder reservoir cover screw	2.0-4.0 Nm	18-35 **in-lbs**

Remove

NOTICE

D.O.T. 4 brake fluid will damage painted and body panel surfaces it comes in contact with. Always use caution and protect surfaces from spills whenever brake work is performed. Failure to comply can result in cosmetic damage. (00239b)

1. Set motorcycle upright. See 2.2 GENERAL, Secure the Motorcycle for Service.

⚠WARNING

Clean filler cap before removing. Use only D.O.T. 4 brake fluid from a sealed container. Contaminated fluid can adversely affect braking, which could result in death or serious injury. (00504c)

NOTICE

Do not allow dirt or debris to enter the master cylinder reservoir. Dirt or debris in the reservoir can cause improper operation and equipment damage. (00205c)

2. See Figure 2-11. Remove rear brake master cylinder cover.
   a. Remove screws (5).
   b. Remove reservoir cover (4).
   c. Remove diaphragm plate (3) and diaphragm (2) from master cylinder reservoir (1).
3. Remove rear brake caliper bracket and rear brake caliper. See 3.14 REAR BRAKE CALIPER.
4. See Figure 2-12. Remove rear brake pads.
   a. Support caliper (1).

   NOTE

   Fluid level can rise above maximum fill level as pistons are pressed into their bores. Remove fluid as necessary.

   b. Press brake pads (3) apart to press pistons back into their bores.
   c. Remove brake pad pin (6).
   d. Remove brake pads.

Inspect

1. See Figure 2-12. Inspect pad pin for wear.
   a. Measure pad pin diameter in an unworn area
   b. Measure pad pin diameter in a worn area.
   c. Replace pin if wear exceeds 0.38 mm (0.015 in).

2. Inspect brake pad spring (5) and slider (4) for wear. Replace as necessary.

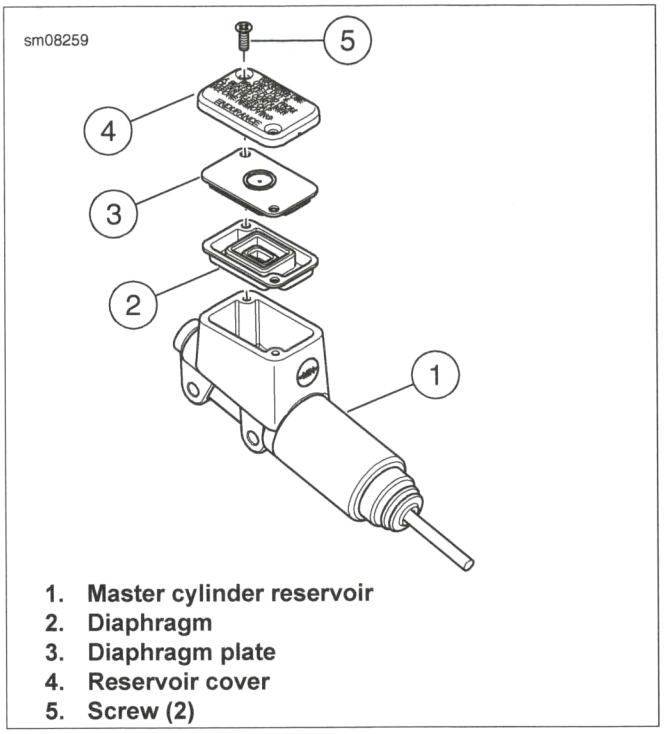

1. **Master cylinder reservoir**
2. **Diaphragm**
3. **Diaphragm plate**
4. **Reservoir cover**
5. **Screw (2)**

Figure 2-11. Rear Brake Master Cylinder Reservoir Assembly

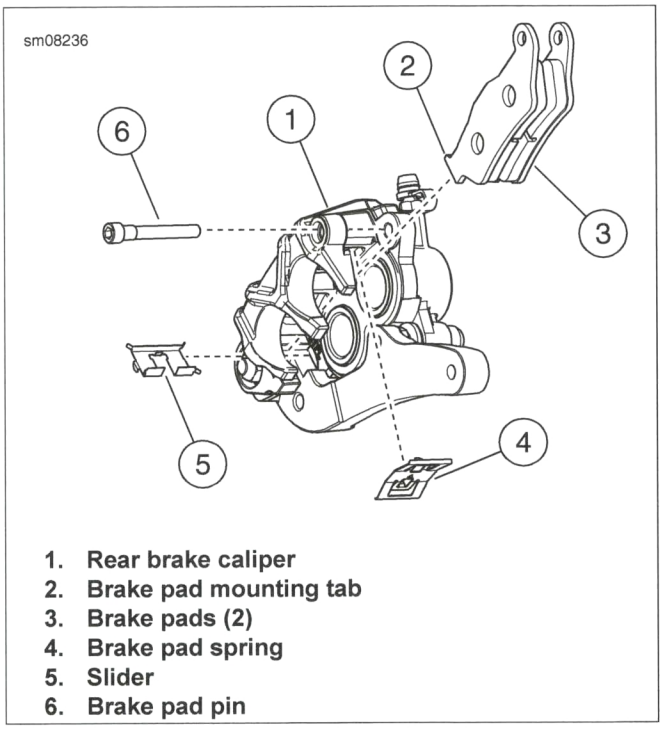

1. **Rear brake caliper**
2. **Brake pad mounting tab**
3. **Brake pads (2)**
4. **Brake pad spring**
5. **Slider**
6. **Brake pad pin**

Figure 2-12. Rear Brake Pads

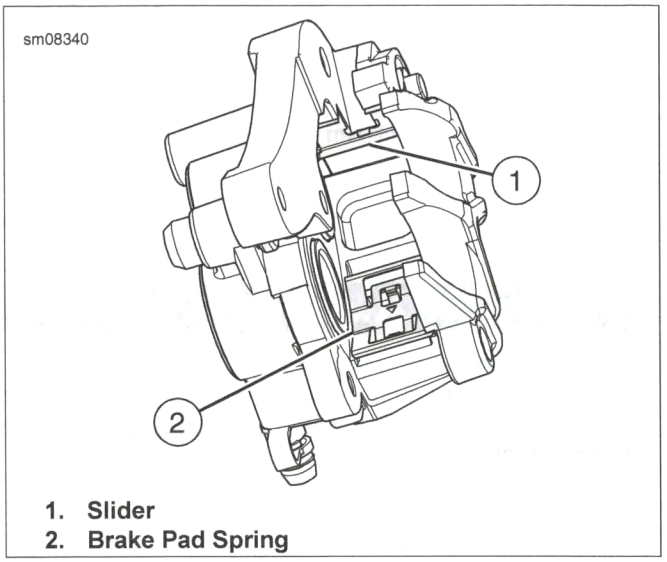

1. **Slider**
2. **Brake Pad Spring**

Figure 2-13. Brake Pad Spring

Install

1. See Figure 2-13. Install slider (1) and brake pad spring (2).
2. See Figure 2-12. Install rear brake pads.
   a. Install **new** piston-side brake pad (3).
   b. Install pad mounting tab (2) to slider (5).
   c. Press pad against pistons.
   d. Install **new** wheel-side brake pad.
   e. Install pad mounting tab to slider.
   f. Press pad against mounting bracket.
   g. Align brake pads against brake pad spring (4).
3. Install pad pin.
   a. Press wheel-side pad against brake pad spring.
   b. Insert brake pad pin through caliper and brake pad.
   c. Press piston-side pad against brake pad spring.
   d. Install brake pad pin.
4. Install caliper and bracket. See 3.14 REAR BRAKE CALIPER.
5. Tighten pad pin to 14.8-19.5 Nm (131-173 **in-lbs**).

⚠WARNING

After servicing brakes and before moving motorcycle, pump brakes to build brake system pressure. Insufficient pressure can adversely affect brake performance, which could result in death or serious injury. (00279a)

6. Squeeze rear brake lever to push pistons against brake pad.
7. Check fluid level in brake reservoir. Add enough DOT 4 BRAKE FLUID to reservoir to bring fluid level to maximum fill level.

8. See Figure 2-11. Install rear brake master cylinder cover.
   a. Install diaphragm (2) and diaphragm plate (3).
   b. Install reservoir cover (4) and screws (5). Tighten screws to 2.0-4.0 Nm (18-35 **in-lbs**).

NOTE

*Avoid making hard stops for first 160 km (100 mi) to allow **new** pads to become conditioned to brake discs.*

⚠WARNING

After repairing the brake system, test brakes at low speed. If brakes are not operating properly, testing at high speeds can cause loss of control, which could result in death or serious injury. (00289a)

⚠WARNING

Be sure that all lights and switches operate properly before operating motorcycle. Low visibility of rider can result in death or serious injury. (00316a)

9. Test brakes.
   a. Check operation of rear lamps.
   b. Test ride motorcycle. Repeat the bleed procedure if brakes feel spongy. See 3.16 BLEED BRAKES.

CHECK BRAKE FLUID LEVEL

NOTES

- *Do not add or remove brake fluid from the system during normal wear. Reservoir volume is adequate to provide fluid to the wear limits of the pads and discs.*
- *Fluid level in reservoir will decrease with brake wear. If fluid level is low, check brake pads and discs for wear.*

Front

1. Check front master cylinder reservoir fluid level.
   a. Set motorcycle upright and turn handlebar to level reservoir.
   b. See Figure 2-14. Check level in sight glass.
2. If fluid is below **MIN** mark:
   a. Check brake pad installation or for wear beyond specification. Replace or repair as necessary. See 2.8 INSPECT BRAKES.
   b. Check brake system for leaks. Repair as necessary.

Rear

1. Check rear master cylinder reservoir fluid level.
   a. Set motorcycle upright to level reservoir.
   b. See Figure 2-15. Check level in sight glass.
2. If fluid is below **MIN** mark:
   a. Check brake pad installation or for wear beyond specification. Replace or repair as necessary. See 2.8 INSPECT BRAKES.
   b. Check brake system for leaks. Repair as necessary.

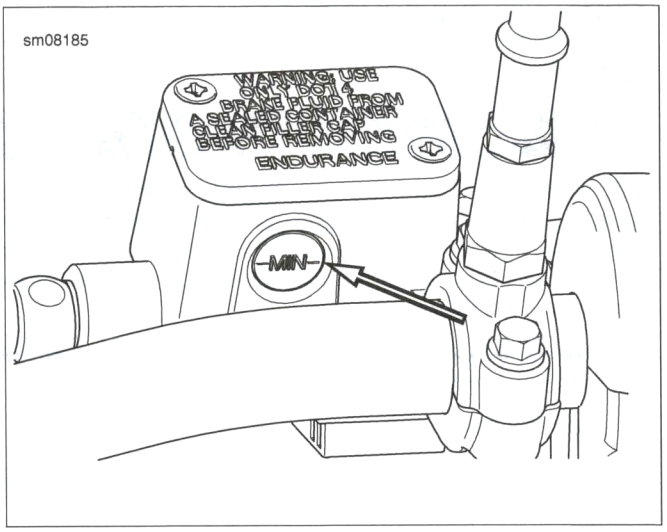

Figure 2-14. Front Master Cylinder Reservoir Sight Glass

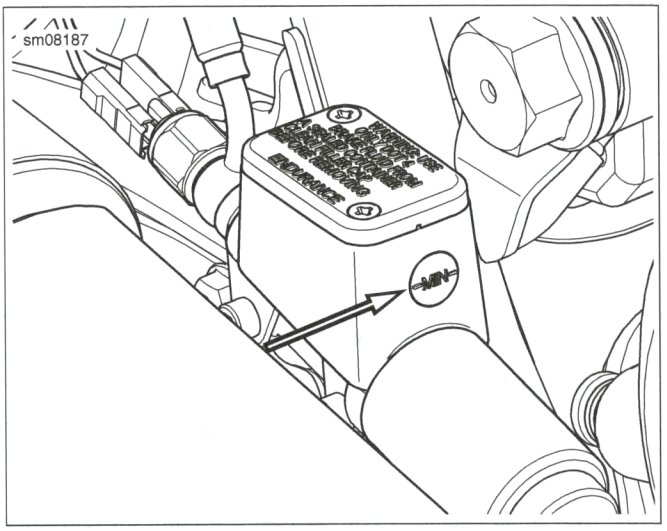

Figure 2-15. Rear Master Cylinder Reservoir Sight Glass

DRAIN AND REPLACE FLUID

For this scheduled maintenance procedure, see 3.16 BLEED BRAKES.

CHECK AND ADJUST

Check

⚠WARNING

Before starting engine, be sure throttle control will snap back to idle position when released. A throttle control that prevents engine from automatically returning to idle can lead to loss of control, which could result in death or serious injury. (00390a)

1. Twist on and then release throttle grip. If throttle does not return to closed (idle), inspect and adjust throttle cables.
2. Start engine.
3. Turn handlebar full left to full right. If engine speed changes, adjust throttle cables.
4. Turn engine off.

Adjust

1. See Figure 2-16. Remove boot (3) from cable adjusters (4).
2. Loosen jamnuts (5).
3. Turn cable adjusters to shorten cable housings to minimum length.
4. Point front wheel straight ahead.
5. Twist throttle grip (1) fully open.
6. Turn cable adjuster (4) on throttle cable (2) until throttle cam (8) touches throttle cam stop (9).
7. Release throttle grip.
8. Turn adjuster an extra one-half turn and tighten jamnut.
9. Turn handlebar full right.
10. Turn cable adjuster (4) on idle cable (6) until the idle cable housing is fully seated within the cable guide (7).
11. Twist and release throttle grip. If throttle does not return to closed (idle), turn idle adjuster to shorten sleeve until it does.
12. Tighten jamnuts.
13. Install rubber boot on control cable adjusters.

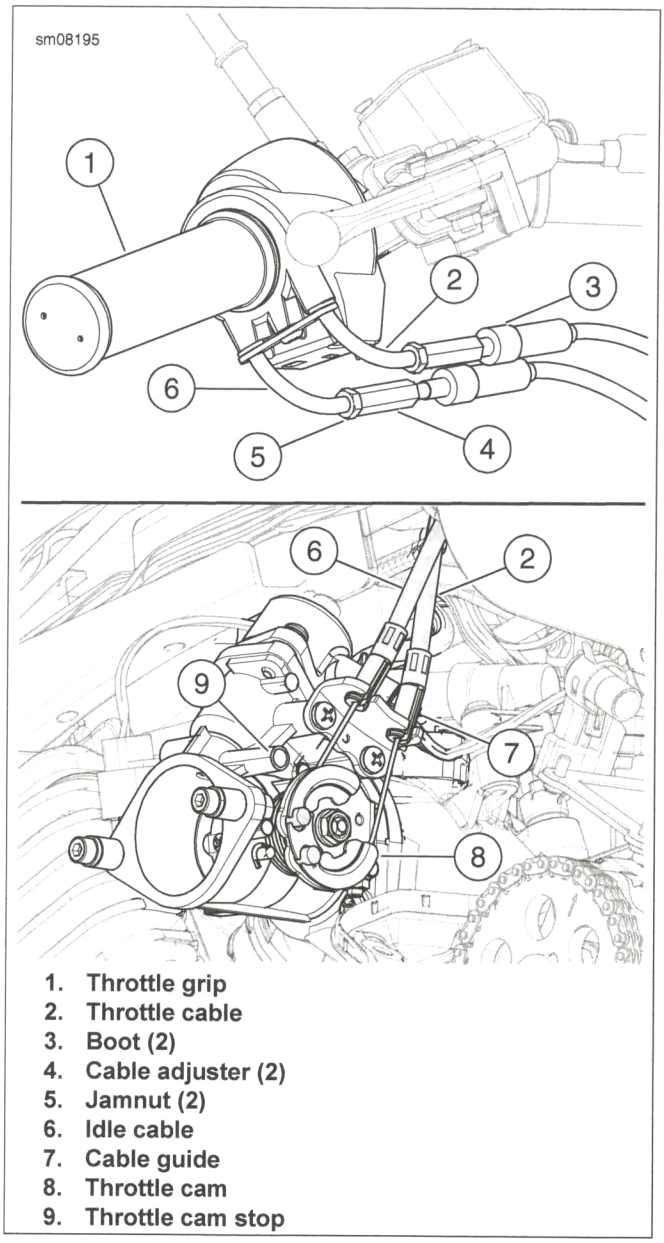

1. **Throttle grip**
2. **Throttle cable**
3. **Boot (2)**
4. **Cable adjuster (2)**
5. **Jamnut (2)**
6. **Idle cable**
7. **Cable guide**
8. **Throttle cam**
9. **Throttle cam stop**

Figure 2-16. Control Cable Adjustment

LUBRICATE

For this scheduled maintenance procedure, see 3.24 THROTTLE CONTROL.

CHECK AND ADJUST

Check Free Play

1. See Figure 2-17. Measure clutch lever free play.
   a. Pull clutch cable ferrule (1) away from clutch cable adjuster (2).
   b. Measure free play (3).

Adjust Cable

1. See Figure 2-18. Adjust lower clutch cable.
   a. Verify that the clutch actuator (6) lever is fully disengaged.
   b. Loosen lower jamnuts (4).
   c. Position clutch cable (1) to remove slack.
   d. Tighten lower jamnuts (4).
2. See Figure 2-18. Adjust upper clutch cable.
   a. Verify that the clutch actuator lever (6) is fully disengaged.
   b. Loosen upper jamnut (3).
   c. Turn clutch cable adjuster (2) to adjust to specification. Refer to Table 2-6.
   d. Tighten upper jamnut (3).

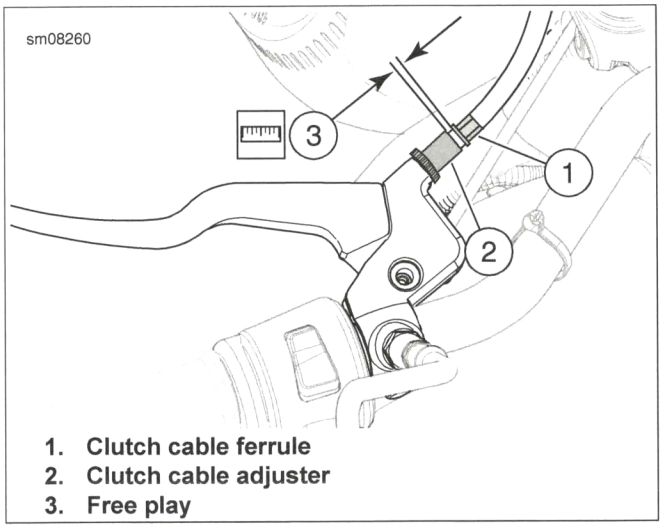

1. Clutch cable ferrule
2. Clutch cable adjuster
3. Free play

Figure 2-17. Clutch Lever Free Play

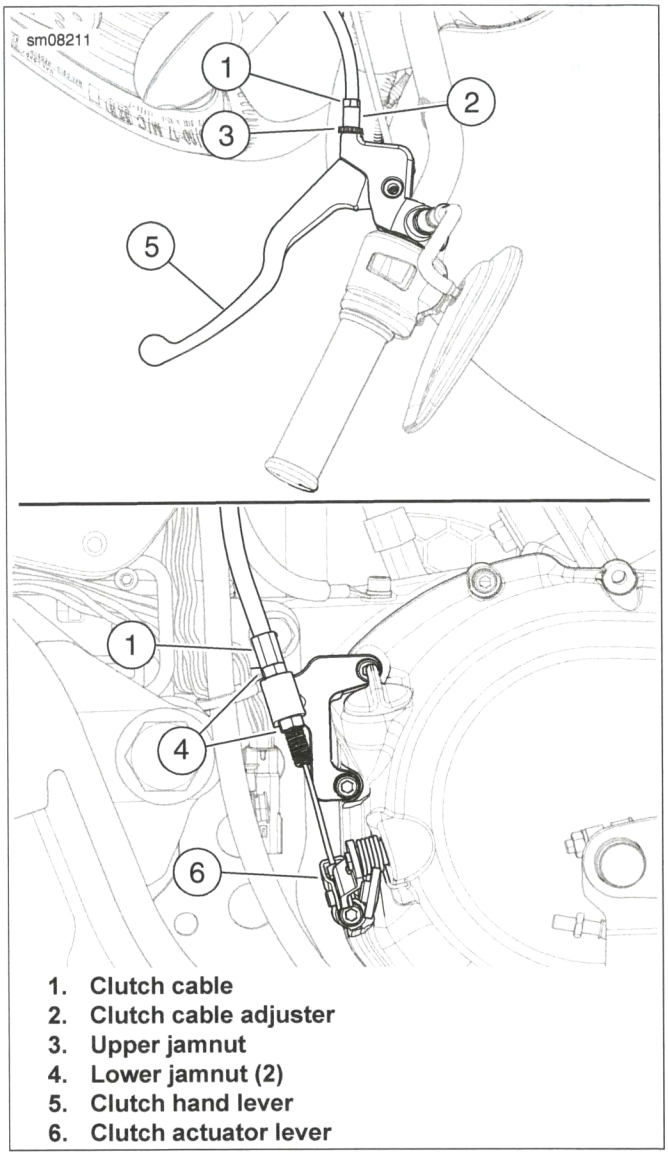

1. Clutch cable
2. Clutch cable adjuster
3. Upper jamnut
4. Lower jamnut (2)
5. Clutch hand lever
6. Clutch actuator lever

Figure 2-18. Clutch Cable Adjustment

Table 2-6. Clutch Lever Free Play Specifications

MEASUREMENT	mm	in
Clutch Lever Free Play	2.0-3.0	0.079-0.118

ADJUST

FASTENER	TORQUE VALUE	
Rear brake pushrod jamnut	7.0-9.0 Nm	62-79 **in-lbs**

1. See Figure 2-19. Loosen jamnut (2).
2. Rotate turnbuckle (1) to achieve 1.0-1.5 mm (0.039-0.051 in) free play.
3. Tighten jamnut (2) to 7.0-9.0 Nm (62-79 **in-lbs**).

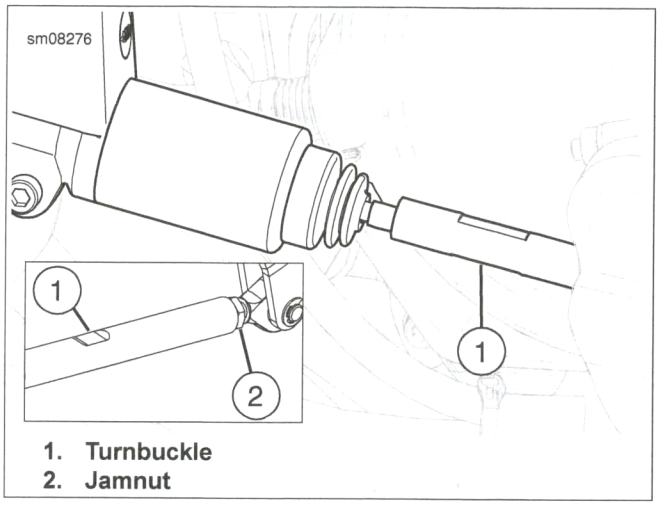

1. **Turnbuckle**
2. **Jamnut**

Figure 2-19. Rear Brake Pushrod Adjustment

REBUILD AND REPLACE FORK OIL

For this scheduled maintenance procedure, see 3.18 FRONT FORK.

PREPARE

1. Remove headlamp fairing. See 3.25 HEADLAMP FAIRING.
2. Disconnect clutch cable. See 3.23 CLUTCH CONTROL.
3. Raise front wheel. See 2.2 GENERAL, Secure the Motorcycle for Service.

FALL-AWAY

FASTENER	TORQUE VALUE	
Fork stem screw, first torque	22.6 Nm	200**in-lbs**
Fork stem screw, second torque	8.5 Nm	75**in-lbs**
Fork stem pinch screw	50.0-60.0 Nm	37-44 ft-lbs
Lower fork bracket pinch screw	34.3-39.2 Nm	26-28 ft-lbs

Measure

1. See Figure 2-20. Center and tape a piece of lightweight cardboard 20-25 cm (8-10 in) across the front of the fender.
2. Mark the cardboard at center (1).
3. Mount an indicator to a floor stand. With the front wheel pointed straight ahead, position the indicator at the center of the fender.
4. Tap the fender on one side until the front fork begins to pivot (fall-away) without being tapped. Mark that point (3).
5. Repeat in the opposite direction.
6. Measure the distance (3) between the two fall-away marks.
7. If fall-away is not within specification, adjust the fork stem bolt. Refer to Table 2-7.

Table 2-7. Fall-Away Specifications

MODEL	MINIMUM		MAXIMUM	
	mm	in	mm	in
XG500	127.0	5.0	165.1	6.5
XG750	127.0	5.0	165.1	6.5

Adjust

1. See Figure 2-21. Loosen two lower bracket pinch screws (5).
2. Loosen fork stem pinch screw (3).
3. Tighten fork stem screw to 22.6 Nm (200**in-lbs**).
4. Turn handlebar full left to full right three times.
5. Loosen fork stem screw 90 degrees.
6. Tighten fork stem screw to 8.5 Nm (75**in-lbs**).
7. Measure front fork fall-away.
8. Adjust if necessary.
   a. If fall-away is more than the maximum, loosen the fork stem screw (1).
   b. If fall-away is less than the minimum, tighten the fork stem screw.
9. Tighten fork stem pinch screw to 50.0-60.0 Nm (37-44 ft-lbs).
10. Tighten lower bracket pinch screws to 34.3-39.2 Nm (26-28 ft-lbs).

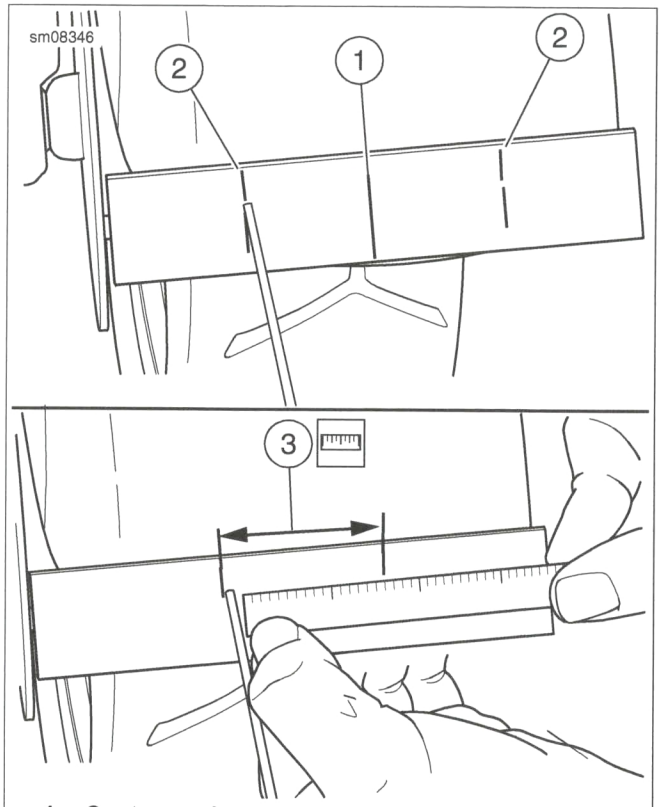

1. **Center mark**
2. **Final fall away marks**
3. **Final dimension**

Figure 2-20. Marking and Measuring Fall Away Points

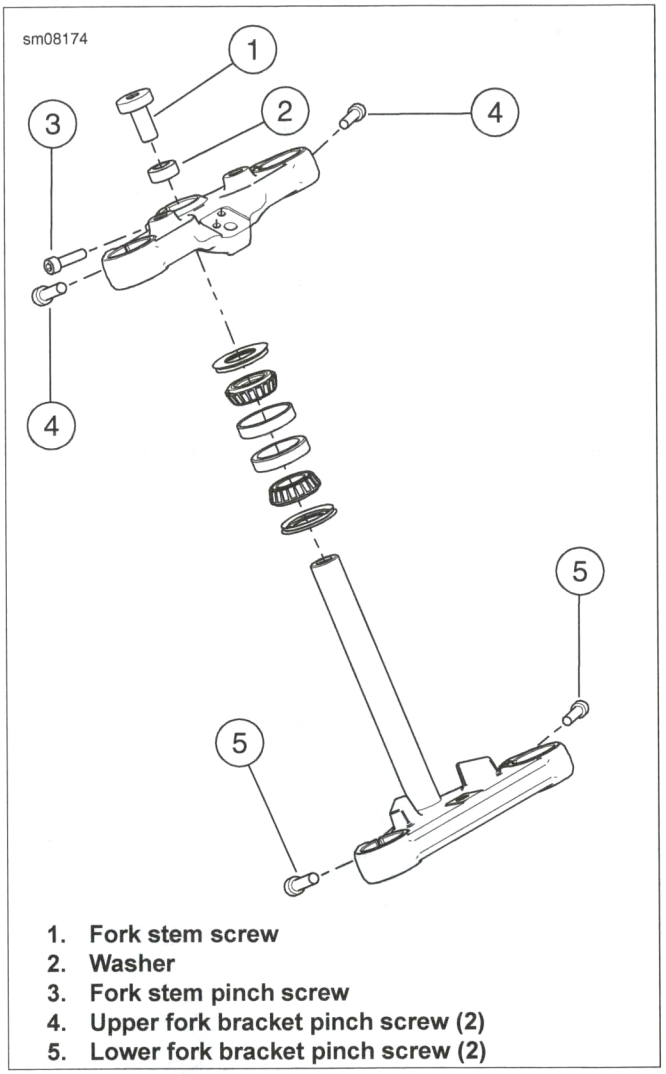

1. **Fork stem screw**
2. **Washer**
3. **Fork stem pinch screw**
4. **Upper fork bracket pinch screw (2)**
5. **Lower fork bracket pinch screw (2)**

Figure 2-21. Steering Head Assembly

LUBRICATE

1. Disassemble the steering head assembly and lubricate the tapered roller bearings with SPECIAL PURPOSE GREASE. See 3.19 STEERING HEAD/FORK STEM AND BRACKET ASSEMBLY.

COMPLETE

1. Lower front wheel.
2. Connect clutch cable. See 3.23 CLUTCH CONTROL.
3. Adjust clutch cable. See 2.11 CHECK AND ADJUST CLUTCH.
4. Install headlamp fairing. See 3.25 HEADLAMP FAIRING.

PREPARE

1. Allow motorcycle to cool.
2. Set motorcycle upright. See 2.2 GENERAL, Secure the Motorcycle for Service.
3. Remove left side cover. See 3.17 SIDE COVERS.

GENERAL

NOTICE

Use only Genuine Harley-Davidson Extended Life Antifreeze and Coolant. Use of other coolants/mixtures may lead to engine damage. (00179b)

GENUINE HARLEY-DAVIDSON EXTENDED LIFE ANTIFREEZE AND COOLANT is pre-diluted and ready to use full strength. It provides temperature protection to -36.7° C (-34° F). DO NOT add water.

NOTICE

De-ionized water must be used with the antifreeze in the cooling system. Hard water can cause scale accumulation in water passages which reduces cooling system efficiency, leading to overheating and engine damage. (00195a)

If GENUINE HARLEY-DAVIDSON EXTENDED LIFE ANTIFREEZE AND COOLANT is unavailable, a mixture of de-ionized water and ethylene glycol-based antifreeze may be used. At the first opportunity, change back to GENUINE HARLEY-DAVIDSON EXTENDED LIFE ANTIFREEZE AND COOLANT.

CLEAN RADIATOR

FASTENER	TORQUE VALUE	
Radiator shroud screw	9.0-11.0 Nm	80-97 **in-lbs**

⚠CAUTION

At operating temperature, radiators and oil coolers contain hot fluids. Contact with a radiator or oil cooler can result in minor or moderate burns. (00141b)

NOTICE

Using a pressure washer to clean radiators or oil coolers can damage cooling fins and reduce airflow. Reduced airflow can lead to overheating, resulting in engine damage and could void your engine warranty. (00056b)

1. See Figure 2-22. Remove radiator shroud.
   a. Remove screws (5) and washers (4).
   b. Remove radiator shroud (3) from mounting tab (1).

NOTICE

Clean the inlet surface of the radiator regularly. Leaves and other debris can collect on the radiator surface and degrade radiator performance which could lead to engine overheating and engine damage. (00197c)

2. Clean debris from radiator fins (2).
3. Install radiator shroud.
   a. Align top of radiator shroud to mounting tab.
   b. Install washers and screws. Tighten to 9.0-11.0 Nm (80-97 **in-lbs**).

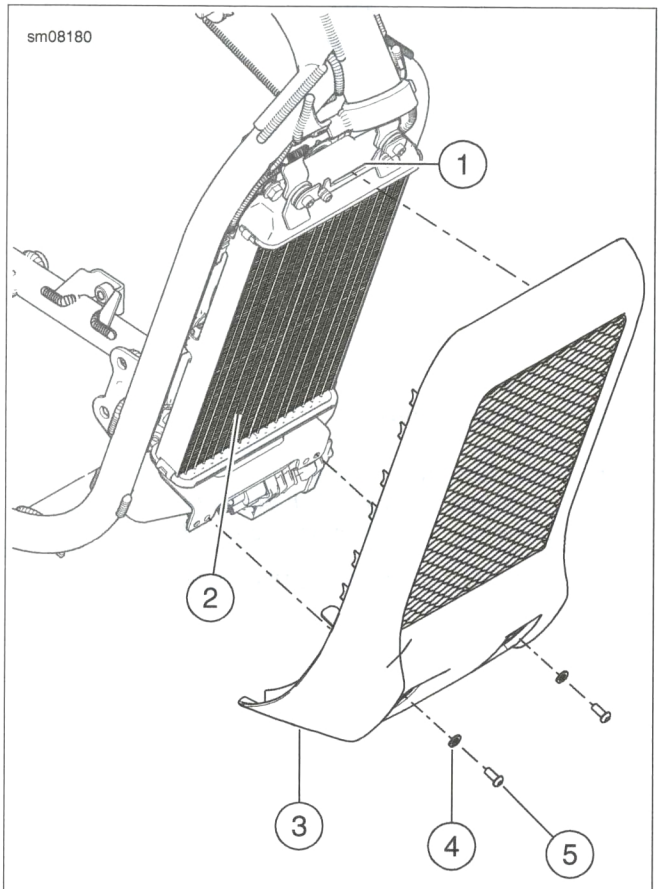

1. **Mounting tab**
2. **Radiator fins**
3. **Radiator shroud**
4. **Washer (2)**
5. **Screw (2)**

Figure 2-22. Radiator Shroud

INSPECT

Check Freeze Point

For this scheduled maintenance procedure, see 7.4 DIAGNOSE AND TEST.

Check for Leaks

For this scheduled maintenance procedure, see 7.4 DIAGNOSE AND TEST.

Check Clamps

For this scheduled maintenance procedure, see 7.9 COOLANT HOSES.

REPLACE

For this scheduled maintenance procedure, see 7.5 COOLANT.

COMPLETE

1. Install left side cover. See 3.17 SIDE COVERS.

INSPECT FUEL LINES AND FITTINGS 2.16

INSPECT

For this scheduled maintenance procedure, see 6.6 FUEL LINE.

INSPECT JIFFY STAND 2.17

INSPECT AND LUBRICATE

For this scheduled maintenance procedure, see 3.37 JIFFY STAND.

INSPECT REAR FORK BEARING 2.18

INSPECT

For this scheduled maintenance procedure, see 3.20 REAR FORK.

INSPECT

Sprockets

NOTE

If chrome chips or gouges to rear sprocket are large enough to be harmful, they will leave a pattern on the belt face.

1. See Figure 2-23. Inspect each tooth (1) of rear sprocket for:

- major tooth damage
- large chrome chips with sharp edges
- gouges caused by hard objects
- excessive loss of chrome plating

2. To check if chrome plating has worn off, drag a scribe or sharp knife point across the bottom of a groove (2) (between two teeth) with medium pressure.
   a. If scribe or knife point slides across groove without digging in or leaving a visible mark, chrome plating is still good.
   b. If scribe or knife points digs in and leaves a visible mark, it is cutting the bare aluminum. A knife point will not penetrate the chrome plating.

3. Replace rear sprocket if major tooth damage or loss of chrome exists.

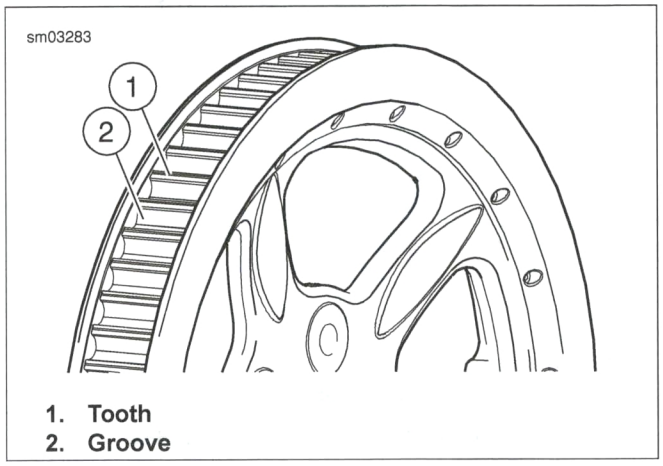

1. **Tooth**
2. **Groove**

Figure 2-23. Rear Sprocket

Drive Belt

See Figure 2-24. Inspect drive belt for:

- Cuts or unusual wear patterns.
- Outside edge beveling (8). Some beveling is common, but it indicates that sprockets are misaligned.
- Outside ribbed surface for signs of stone puncture (7). If cracks or other damage exists near edge of belt, replace belt immediately. Damage to center of belt will require belt replacement eventually. However, when cracks extend to edge of belt, failure is imminent.
- Inside (toothed portion) of belt for exposed tensile cords (normally covered by nylon layer and polyethylene layer). This condition will result in belt failure and indicates worn transmission sprocket teeth. Replace belt and transmission sprocket.
- Signs of puncture or cracking at the base of the belt teeth. Replace belt if either condition exists.
- Replace belt if conditions 2, 3, 6 or 7 (on edge of belt) exist.

NOTE

Condition 1 may develop into 2 or 3 over time. Condition 1 is not grounds for replacing the belt, but it should be watched closely before condition 2 develops which will require belt replacement.

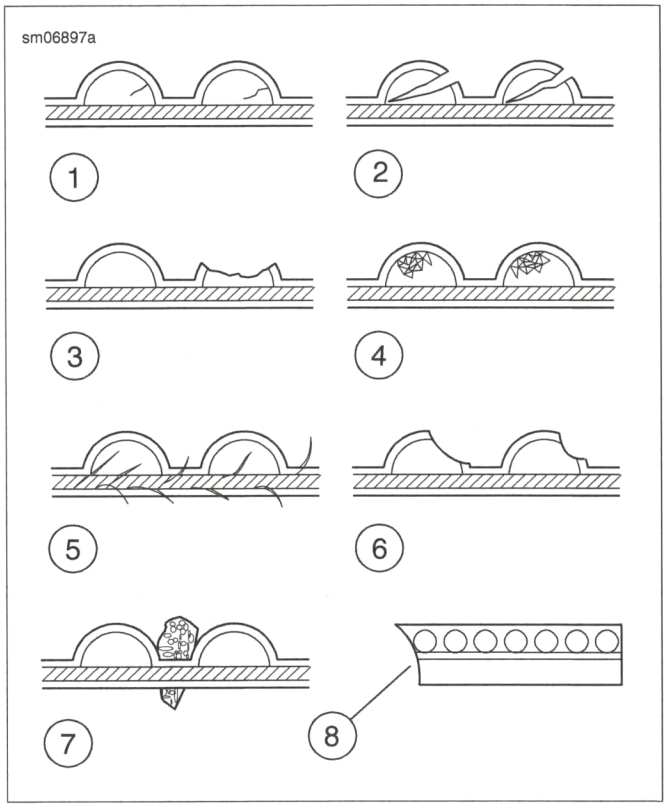

Figure 2-24. Drive Belt Wear Patterns

Table 2-8. Drive Belt Wear Analysis

NO.*	CONDITION	REQUIRED ACTION
1	Internal tooth cracks (hairline)	OK to run, but monitor condition.
2	External tooth cracks	Replace belt.
3	Missing teeth	Replace belt.
4	Chipping (not serious)	OK to run, but monitor condition.
5	Fuzzy edge cord	OK to run, but monitor condition.
6	Hook wear	Replace belt and sprocket.
7	Stone damage	Replace belt if damage is on the edge.
8	Bevel wear (outboard edge only)	OK to run, but monitor condition.
* See Figure 2-24.		

MEASURE DRIVE BELT DEFLECTION

PART NUMBER	TOOL NAME
HD-35381-A	BELT TENSION GAUGE

NOTE

Always use BELT TENSION GAUGE (Part No. HD-35381-A) to measure belt deflection. Failure to use tension gauge may cause under-tensioned belts. Loose belts can fail due to "ratcheting" (jumping a tooth) which causes tensile cord crimping and breakage.

1. Measure drive belt deflection.
   a. Set motorcycle upright or on jiffy stand and unladen.
   b. See Figure 2-25. Use H-D BELT TENSION GAUGE (Part No. HD-35381-A).
   c. Slide O-ring (4) to 0 kg (0 lbs) mark (3).
   d. Fit belt cradle (2) against bottom of drive belt inline with belt deflection window.
   e. Press upward on knob (6) until O-ring slides down to 4.5 kg (10 lbs) mark (5) and hold steady.
   f. See Figure 2-26. Measure belt deflection as viewed through belt deflection viewing window while holding gauge steady. Each deflection graduation is 1.59 mm (0.0625 in).
2. Compare with specifications listed in Table 2-9.
3. Adjust as necessary.

Table 2-9. Belt Deflection Specifications*

MODELS	mm	in
XG500	12.7-15.9	0.50-0.62
XG750	12.7-15.9	0.50-0.62
* Deflection measured at 4.5 kg (10 lb) tension.		

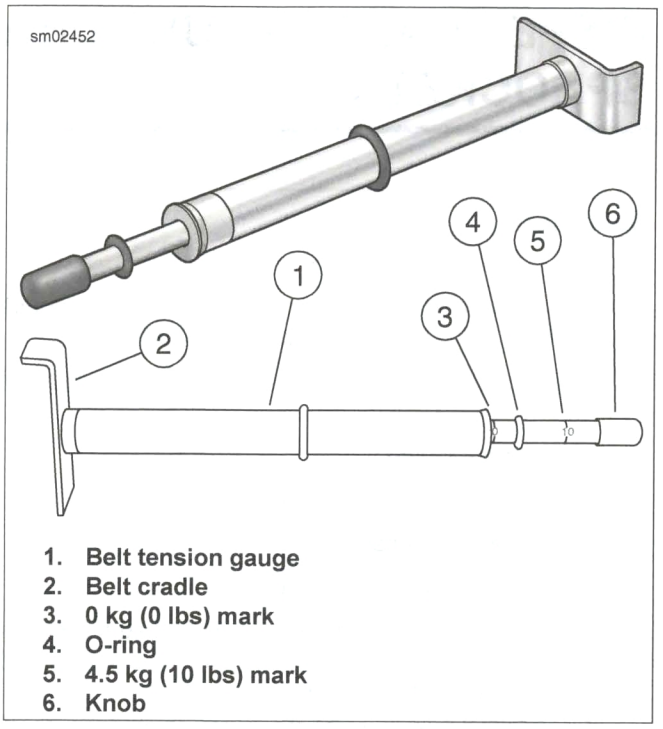

1. **Belt tension gauge**
2. **Belt cradle**
3. **0 kg (0 lbs) mark**
4. **O-ring**
5. **4.5 kg (10 lbs) mark**
6. **Knob**

Figure 2-25. Belt Tension Gauge

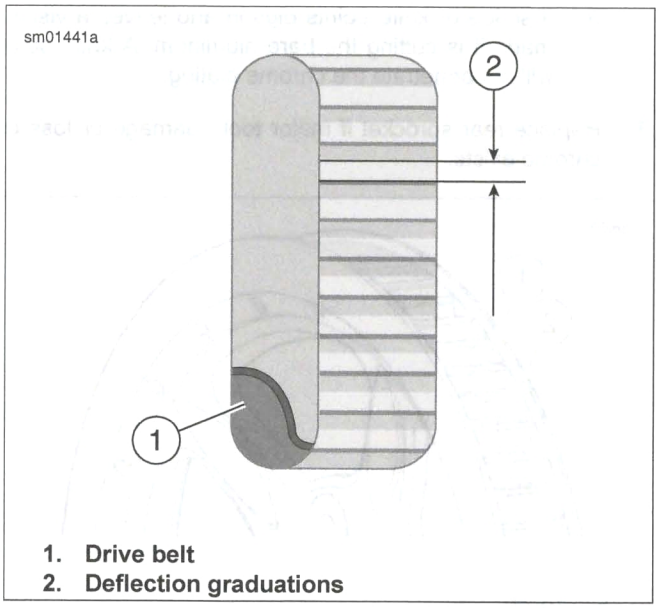

1. **Drive belt**
2. **Deflection graduations**

Figure 2-26. Belt Deflection Window

ADJUST BELT

1. See Figure 2-27. Adjust rear axle.
   a. Loosen rear axle nut (1).

NOTE

Turn both adjuster nuts same number of turns in order to maintain approximate alignment of rear wheel.

b. Turn axle adjuster nuts (2) clockwise to decrease belt deflection (increase tension), or counterclockwise to increase belt deflection (decrease tension).

c. Check rear wheel alignment. See 3.10 WHEEL ALIGNMENT.

d. Tighten rear axle nut. See 3.5 REAR WHEEL.

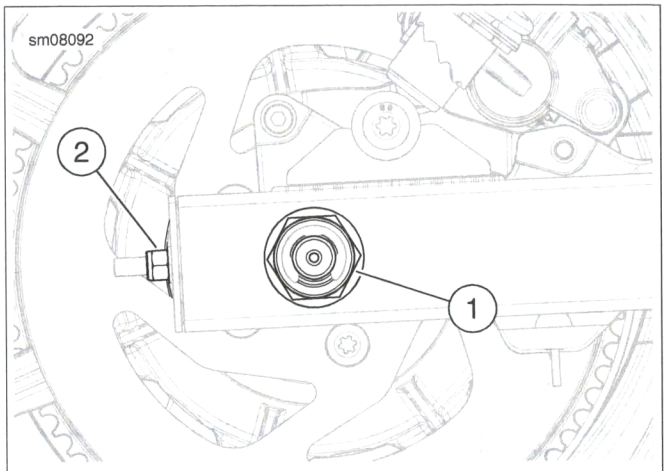

1. **Axle nut**
2. **Axle adjuster nut**

Figure 2-27. Axle Adjuster

INSPECT

1. See Figure 2-28. Check rear wheel compensator wear.
   a. Hang a weighted string (1) on the left axle spacer.

   NOTE
   Do not allow the rear wheel to rotate when rotating the sprocket. A false measurement will occur.

   b. Rotate the rear sprocket by hand in one direction until it stops.
   c. Hold sprocket in place and mark face of sprocket along the string.
   d. Rotate the rear sprocket by hand in the opposite direction until it stops.
   e. Hold sprocket in place and mark face of sprocket along the string.
   f. Measure the distance (2) between the marks. If the measurement exceeds 10.2 mm (0.400 in) replace the rubber isolator. See 3.6 REAR WHEEL COMPENSATOR.

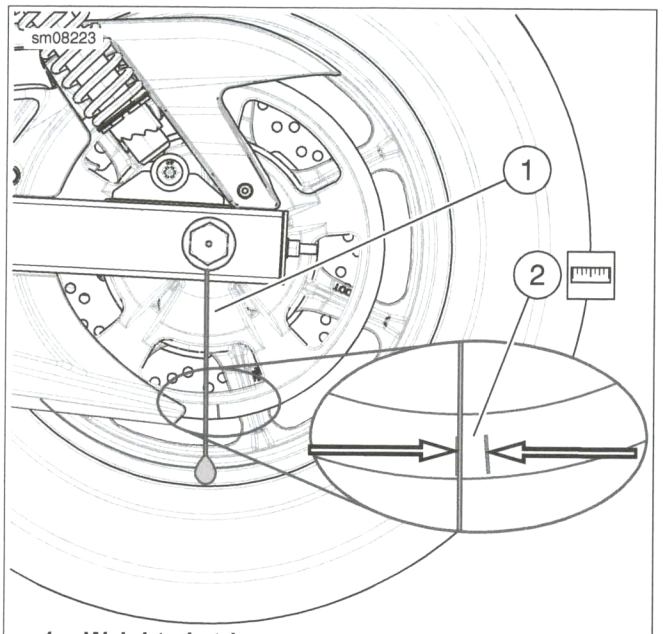

1. **Weighted string**
2. **Measured distance**

Figure 2-28. Check Compensator Wear

INSPECT REAR SHOCK ABSORBER BUSHINGS 2.21

INSPECT

For this scheduled maintenance procedure, see 3.22 SHOCK ABSORBERS.

LEAK CHECK

1. Check exhaust system for obvious signs of leakage such as carbon tracks and marks at pipe joints.
   a. Check for loose or missing fasteners. Tighten or replace as necessary.
   b. Check for cracked pipe clamps or brackets. Replace or repair as necessary.
   c. Check for loose or cracked exhaust shields. Replace or repair as necessary.
2. Check exhaust system for audible signs of leakage.
   a. Start engine.
   b. Cover end of muffler with clean, dry shop towel.
   c. Listen for audible signs of exhaust leakage.
3. Correct any detected leaks.
   a. See 6.18 EXHAUST SYSTEM. Disassemble exhaust system.
   b. Clean all mating surfaces.
   c. Repair or replace damaged components.
   d. Assemble exhaust system.

NOTE

If leak continues, disassemble and apply Permatex Ultra Copper or LOCTITE 5920 FLANGE SEALANT or equivalent oxygen sensor/catalyst-safe alternative to mating surfaces.

REMOVE

1. See Figure 2-29. Remove air cleaner cover.
   a. Remove screw (1).
   b. Remove cover (2).
2. Remove filter element.
   a. Remove nuts (3).
   b. Remove bracket (4).
   c. Remove filter element (5).
   d. Remove washers (7).

INSTALL

FASTENER	TORQUE VALUE	
Air filter bracket nuts	6.0-8.0 Nm	54-70 **in-lbs**
Air filter cover screw	6.0-8.0 Nm	54-70 **in-lbs**

1. See Figure 2-29. Install filter element.
   a. Install washers (7).
   b. Install filter element (5).
   c. Install bracket (4).
   d. Install nuts (3). Tighten to 6.0-8.0 Nm (54-70 **in-lbs**).
2. Install air cleaner cover.
   a. Install cover (2).
   b. Install screw (1). Tighten to 6.0-8.0 Nm (54-70 **in-lbs**).

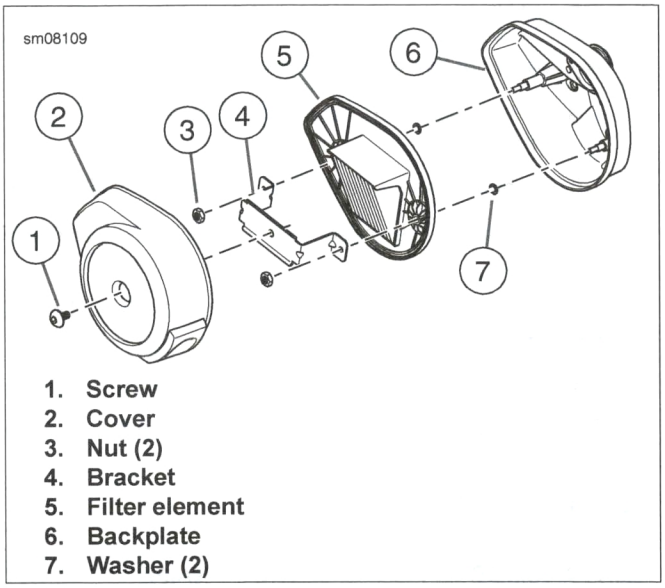

1. **Screw**
2. **Cover**
3. **Nut (2)**
4. **Bracket**
5. **Filter element**
6. **Backplate**
7. **Washer (2)**

Figure 2-29. Air Cleaner

INSPECT

1. Inspect air filter element.
   a. Hold the filter element up to a strong light source.
   b. Replace the filter element if light is not uniformly visible through the filter element.

PREPARE

1. Remove front belt guard. See 3.21 BELT GUARDS.
2. Disconnect negative battery cable. See 8.4 POWER DISCONNECT.
3. Lift rear of fuel tank. See 6.4 LIFT REAR OF FUEL TANK.
4. Remove air cleaner assembly. See 6.3 AIR CLEANER ASSEMBLY.
5. Remove cylinder head covers. See 4.12 CYLINDER HEAD COVERS.
6. Remove spark plugs. See 2.26 REPLACE SPARK PLUGS.
7. Raise rear wheel. See 2.2 GENERAL, Secure the Motorcycle for Service.

INSPECT AND ADJUST

PART NUMBER	TOOL NAME
HD-51502	TAPPET ADJUSTING WRENCH

FASTENER	TORQUE VALUE	
Valve adjuster jamnut	10.0-12.0 Nm	89-106 **in-lbs**

1. Rotate engine so that the measured cylinder is at TDC.
   a. Shift transmission into sixth gear.
   b. See Figure 2-30. Rotate rear wheel toward front of motorcycle until cam sprocket timing arrow (1) is perpendicular and the timing lines (2) are parallel to the cylinder head.

Measure

1. See Figure 2-31. Measure valve lash (3).
2. Record lash of each valve of one cylinder head.
3. Compare measurements with specifications. Refer to Table 4-5.
4. Repeat valve lash measurements on other cylinder head and record measurements.

Adjust

1. See Figure 2-31. Loosen jamnut (2) using TAPPET ADJUSTING WRENCH (Part No. HD-51502).
2. Adjust valve lash (3) to specifications. Refer to Table 4-5.
   a. Turn valve adjuster (1) clockwise to reduce valve lash. Turn valve adjuster counter-clockwise to increase valve lash.
3. Holding valve adjuster in position, tighten jamnut to 10.0-12.0 Nm (89-106 **in-lbs**).

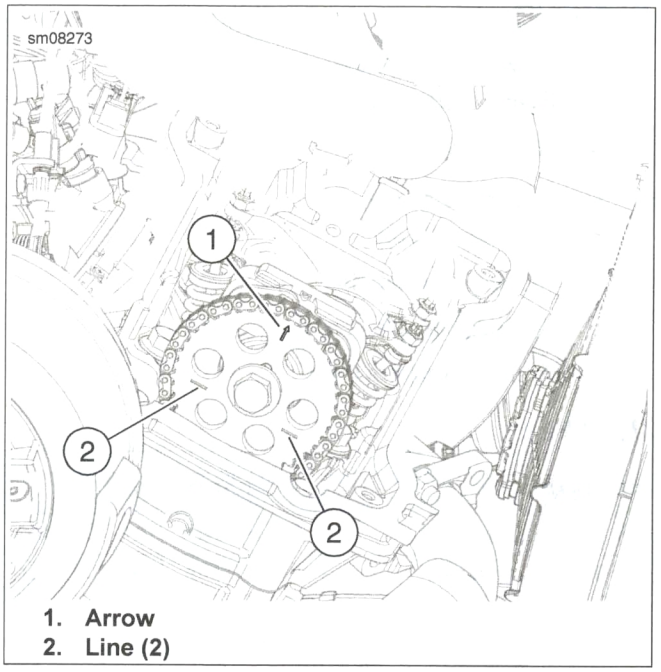

1. Arrow
2. Line (2)

Figure 2-30. Cam Timing Marks

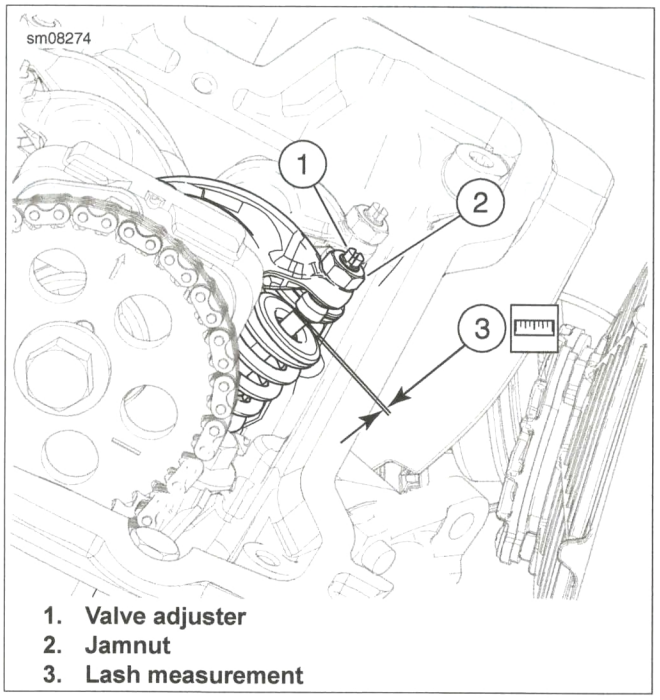

1. Valve adjuster
2. Jamnut
3. Lash measurement

Figure 2-31. Valve Lash

COMPLETE

1. Shift transmission into NEUTRAL.
2. Lower rear wheel.
3. Install spark plugs. See 2.26 REPLACE SPARK PLUGS.
4. Install cylinder head covers. See 4.12 CYLINDER HEAD COVERS.

5. Install air cleaner assembly. See 6.3 AIR CLEANER ASSEMBLY.
6. Secure rear of fuel tank. See 6.4 LIFT REAR OF FUEL TANK.
7. Connect negative battery cable. See 8.4 POWER DISCONNECT.
8. Install front belt guard. See 3.21 BELT GUARDS.

PREPARE

1. Remove left and right side covers. See 3.17 SIDE COVERS.
2. Remove main fuse. See 8.4 POWER DISCONNECT.
3. Remove vapor valve. See 6.10 VAPOR VALVE.
4. Remove front belt guard. See 3.21 BELT GUARDS.

REMOVE

1. See Figure 2-33. Remove electrical panel.
   a. Remove screws (3).
   b. Remove electrical panel (1).

⚠WARNING

Disconnect negative (-) battery cable first. If positive (+) cable should contact ground with negative (-) cable connected, the resulting sparks can cause a battery explosion, which could result in death or serious injury. (00049a)

2. Remove battery.
   a. See Figure 2-32. Disconnect negative battery cable (1) from ground stud (2).
   b. See Figure 2-33. Disconnect positive battery cable (6) from positive battery terminal (5).
   c. Remove battery (4).

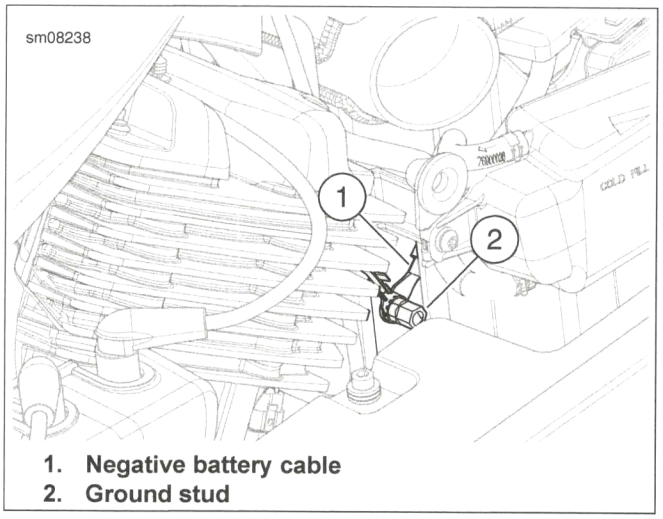

1. **Negative battery cable**
2. **Ground stud**

Figure 2-32. Battery Ground Cable

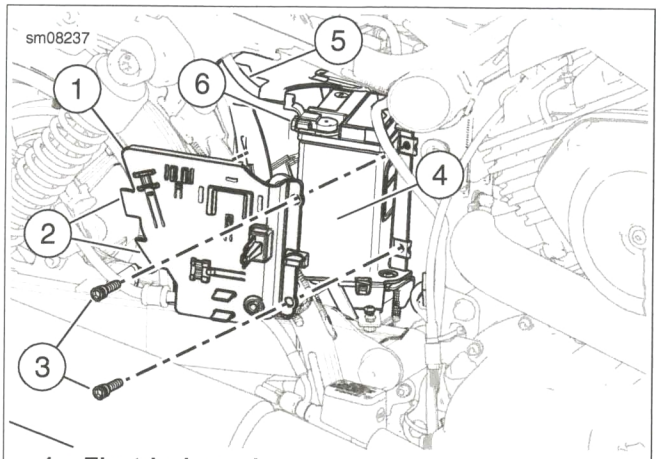

1. **Electrical panel**
2. **Tabs**
3. **Screw (2)**
4. **Battery**
5. **Positive battery cable**
6. **Positive battery terminal**

Figure 2-33. Battery

INSTALL

FASTENER	TORQUE VALUE	
Negative battery terminal screw	6.8-7.9 Nm	60-70 **in-lbs**
Positive battery terminal screw	6.8-7.9 Nm	60-70 **in-lbs**
Battery ground stud	6.0-10.0 Nm	54-88 **in-lbs**
Electrical panel screw	2.3-3.3 Nm	21-29 **in-lbs**

⚠WARNING

Connect positive (+) battery cable first. If positive (+) cable should contact ground with negative (-) cable connected, the resulting sparks can cause a battery explosion, which could result in death or serious injury. (00068a)

NOTICE

Connect the cables to the correct battery terminals. Failure to do so could result in damage to the motorcycle electrical system. (00215a)

1. See Figure 2-33. Install negative battery cable.
   a. Install negative battery cable to negative battery terminal. Tighten to 6.8-7.9 Nm (60-70 **in-lbs**).
   b. Cover negative battery terminal with rubber boot.
   c. Route negative battery cable through battery box.

2. Install battery.
   a. Install battery (4) in battery box.
   b. Connect the positive battery cable (6) to the positive battery terminal (5). Tighten to 6.8-7.9 Nm (60-70 **in-lbs**).
   c. Cover positive battery terminal with rubber boot.
   d. See Figure 2-32. Connect negative battery cable (1) to ground stud (2). Tighten to 6.0-10.0 Nm (54-88 **in-lbs**).
3. See Figure 2-33. Install electrical panel.
   a. Install electrical panel (1).
   b. Verify electrical panel tabs (2) are inserted into slots.
   c. Install screws (3). Tighten to 2.3-3.3 Nm (21-29 **in-lbs**).

CLEAN AND INSPECT

NOTE

Battery top must be clean and dry. Dirt and electrolyte on top of the battery causes battery to self-discharge.

1. Clean battery top.
   a. Mix a solution of five teaspoons of baking soda (sodium bicarbonate) per liter or quart of water.
   b. Apply to battery top.
2. When the solution stops bubbling, rinse off the battery with clean water.
3. Clean cable connectors and battery terminals using a wire brush or sandpaper. Remove any oxidation.
4. Inspect the battery screws, and cables for breakage, loose connections and corrosion.
5. Check the battery terminals for melting or damage.
6. Inspect the battery for discoloration, raised top or a warped or distorted case. Replace as necessary.
7. Inspect the battery case for cracks or leaks.

VOLTAGE TEST

⚠WARNING

Never remove warning label attached to top of battery. Failure to read and understand all precautions contained in warning, could result in death or serious injury. (00064a)

The voltage test provides a general indicator of battery condition. Check the voltage of the battery to verify that it is fully charged.

1. If the open circuit (disconnected) voltage reading is below 12.6 V:
   a. Charge the battery.
   b. Check the voltage after the battery has set for at least one hour.
2. If the voltage reading is 12.7 V or above:
   a. Perform a battery diagnostic test. See the electrical diagnostic manual for the load test procedure.
   b. Refer to Table 2-10.

Table 2-10. Voltage Test For Battery Charge Conditions

VOLTAGE (OCV)	STATE OF CHARGE
12.7 V	100%
12.6 V	75%
12.3 V	50%
12.0 V	25%
11.8 V	0%

STORAGE

PART NUMBER	TOOL NAME
99863-01A	GLOBAL BATTERY CHARGER

See Figure 2-34. A battery is affected by self-discharge whether stored in or out of the vehicle. A battery that is stored in the vehicle is also affected by parasitic loads. A parasitic load is caused by things like diode leakage or maintaining computer memory with the vehicle turned off.

Batteries self-discharge at a faster rate at higher ambient temperatures. To reduce the self-discharge rate, store battery in a cool, dry place.

Charge the battery every two weeks if stored in the vehicle. Charge the battery once per month if removed the vehicle.

NOTE

Use the GLOBAL BATTERY CHARGER (Part No. 99863-01A) to maintain battery charge for extended periods of time without risk of overcharging or boiling.

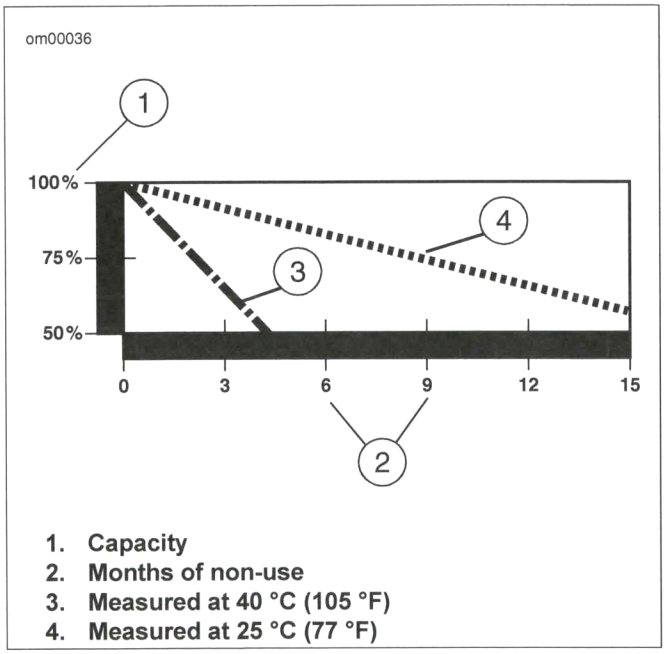

1. **Capacity**
2. **Months of non-use**
3. **Measured at 40 °C (105 °F)**
4. **Measured at 25 °C (77 °F)**

Figure 2-34. Effective Rate of Temperature on Battery Self-discharging Rate

COMPLETE

1. Install front belt guard. See 3.21 BELT GUARDS.
2. Install vapor valve. See 6.10 VAPOR VALVE.
3. Install main fuse. See 8.4 POWER DISCONNECT.
4. Install side covers. See 3.17 SIDE COVERS.

PREPARE

1. Remove main fuse. See 8.4 POWER DISCONNECT.

REMOVE

⚠WARNING

Disconnecting spark plug cable with engine running can result in electric shock and death or serious injury. (00464b)

1. See Figure 2-35. Remove spark plug cables from spark plugs.
2. Thoroughly clean around spark plug base.
3. Remove spark plugs.

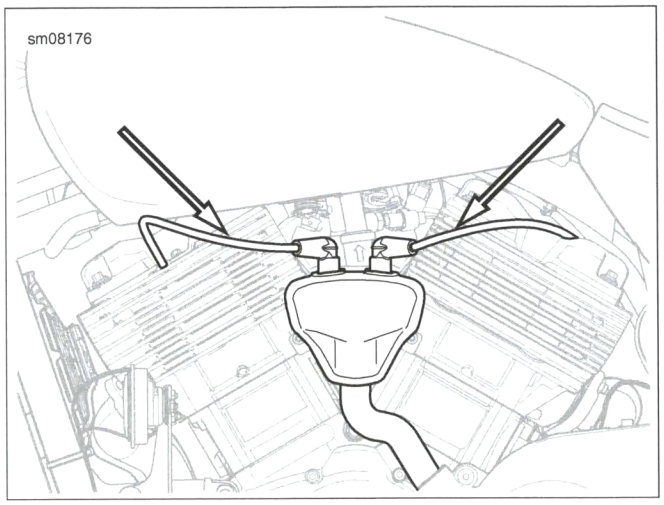

Figure 2-35. Spark Plug Cable Routing: Street Models

INSTALL

FASTENER	TORQUE VALUE	
Spark plug	10.0-12.0 Nm	89-106 **in-lbs**

NOTE

The spark plug gap is within specification when there is a slight drag on the gauge.

1. Verify proper gap before installing **new** or cleaned spark plugs.
   a. Select a wire-type feeler gauge within specification. Refer to Table 2-11.
   b. Pass the wire gauge between the center and the outer electrodes.
   c. Adjust gap to within specification as necessary.
2. Verify spark plug threads are clean and dry.
3. Install spark plugs. Tighten to 10.0-12.0 Nm (89-106 **in-lbs**).
4. See Figure 2-35. Install spark plug cables.

Table 2-11. Spark Plug Gap

MODEL	TYPE	mm	in
XG500	RG6HCC	0.8-0.9	0.31-0.35
XG750	RG6HCC	0.8-0.9	0.31-0.35

CLEAN AND INSPECT

Spark Plugs

NOTE

Discard plugs with eroded electrodes, heavy deposits or a cracked insulator.

1. Inspect spark plugs. Compare plug deposits to Table 2-12.

Table 2-12. Spark Plug Deposit Analysis

DEPOSITS	POSSIBLE CAUSE
Wet, black and shiny	Worn pistons Worn piston rings Worn valves Worn valve guides Worn valve seals Weak battery Faulty ignition system
Dry, fluffy or sooty and black	Air-fuel mixture too rich
Light brown and glassy* May be accompanied by cracks in the insulator or by electrode erosion.	Air-fuel mixture too lean Hot running engine Valves not seating Improper ignition timing
White, gray or tan and powdery	Balanced combustion Clean off deposits at regular intervals.
* The glassy deposit on a spark plug may cause high-speed misfiring.	

Spark Plug Cables

1. Inspect spark plug cables. Replace as necessary.
   a. Check for cracks or loose terminals.
   b. Check for loose fit on ignition coil and spark plugs.
2. Check cable boots/caps for cracks or tears. Replace as necessary.
3. Check spark plug cable resistance with an ohmmeter.
   a. See Figure 2-36.
   b. Replace cables not meeting resistance specifications. Refer to Table 8-3.

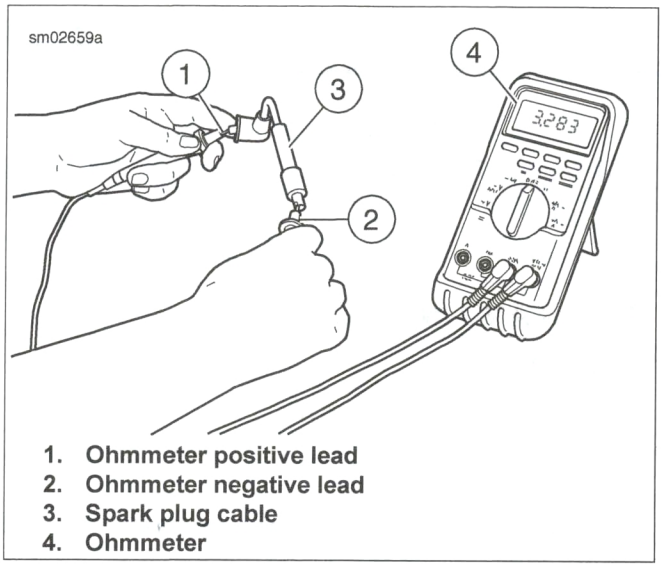

1. Ohmmeter positive lead
2. Ohmmeter negative lead
3. Spark plug cable
4. Ohmmeter

Figure 2-36. Testing Resistance

COMPLETE

1. Install main fuse. See 8.4 POWER DISCONNECT.

PLACE IN STORAGE

PART NUMBER	TOOL NAME
98716-87A	STORAGE COVER

NOTE

If the motorcycle will be stored for an extended period of time, securely support the motorcycle under the frame so that all weight is off the tires.

1. See 2.5 REPLACE ENGINE OIL AND FILTER. Replace the engine oil and filter.
2. See 7.5 COOLANT. Replace the engine coolant.

⚠WARNING

Do not store motorcycle with gasoline in tank within the home or garage where open flames, pilot lights, sparks or electric motors are present. Gasoline is extremely flammable and highly explosive, which could result in death or serious injury. (00003a)

3. See 2.4 FUEL AND OIL. Fill fuel tank. Add fuel stabilizer following manufacturer's instructions.
4. Lubricate cylinders.
   a. See 2.26 REPLACE SPARK PLUGS. Remove the spark plugs.
   b. Inject three squirts of engine oil into each cylinder.
   c. Raise rear wheel.
   d. Shift transmission into sixth gear.
   e. Rotate engine through rear wheel six revolutions.
   f. Replace the spark plugs.
5. See 2.7 LUBRICATE CABLE AND CHASSIS. Lubricate cables and levers.
6. Wash painted and chrome-plated surfaces. Apply a light film of oil to exposed unpainted surfaces.
7. See 2.25 INSPECT BATTERY. Remove and charge battery.
8. If the motorcycle is to be covered, use a material that will breathe, such as STORAGE COVER (Part No. 98716-87A) or light canvas. Plastic materials that do not breathe promote the formation of condensation. Condensation leads to corrosion.

REMOVE FROM STORAGE

1. See 2.25 INSPECT BATTERY. Install fully charged battery.
2. See 2.26 REPLACE SPARK PLUGS. Inspect spark plugs.
3. See 2.23 INSPECT AIR FILTER. Inspect air filter element. Replace if necessary.
4. See 2.19 INSPECT AND ADJUST DRIVE BELT AND SPROCKETS. Inspect drive belt and sprockets. Check drive belt deflection.
5. See 2.4 FUEL AND OIL. Fill fuel tank if necessary.

⚠WARNING

The clutch failing to disengage can cause loss of control, which could result in death or serious injury. Prior to starting after extended periods of storage, place transmission in gear and push vehicle back and forth several times to assure proper clutch disengagement. (00075a)

6. Start the engine. Run motorcycle until engine is at normal operating temperature.
7. Perform all of the other checks in the PRE-RIDING CHECKLIST in the owner's manual.

GENERAL

⚠WARNING

The Troubleshooting section of this manual is a guide to diagnose problems. Read the appropriate sections of this manual before performing any work. Improper repair and/or maintenance could result in death or serious injury. (00528b)

Use the symptoms listed for general troubleshooting. More than one condition may be present at a time. Check all possible items to keep motorcycle in good operating condition.

NOTE

See the electrical diagnostic manual for additional information.

ENGINE

Starter Motor Does Not Operate or Does Not Turn Engine Over

1. Ignition switch not in ON position.
2. Engine run switch in OFF position.
3. Main fuse not in place.
4. Discharged battery, loose or corroded connections (solenoid chatters).
5. Starter control circuit, relay, or solenoid faulty.
6. Electric starter shaft pinion gear not engaging or over-running clutch slipping.
7. Starter limiter gear seized.
8. TSM/TSSM/HFSM Bank Angle Sensor tripped and ignition switch not cycled OFF then ON.

Engine Turns Over but Does Not Start

1. Engine run switch in OFF position.
2. Fuel tank empty.
3. Fuel filter clogged.
4. Fouled spark plugs.
5. Sticking or damaged valve.
6. Discharged battery, loose or inoperative battery terminal connections.
7. Engine lubricant too heavy (winter operation).

NOTE

For cold weather starts, always disengage clutch.

8. Loose wire connection at coil(s), battery or ECM connector.
9. Ignition timing incorrect due to faulty coil(s), ECM or sensors (MAP, CKP and/or TSM/TSSM/HFSM).
10. Bank Angle Sensor tripped and ignition switch not cycled OFF then ON.

Starts Hard

1. Spark plugs in bad condition or have improper gap or are partially fouled.
2. Battery nearly discharged.
3. Loose wire connection at one of the battery terminals, coil(s) or ECM connector.
4. Water or dirt in fuel system.
5. Intake air leak.
6. Fuel tank vent hose and vapor valve plugged, or fuel line closed off, restricting fuel flow.
7. Engine lubricant too heavy (winter operation).

NOTE

For cold weather starts, always disengage clutch.

8. Ignition not functioning properly (possible sensor failure).
9. Faulty ignition coil(s).
10. Valves sticking or valves too tight.
11. Rotor key sheared.

Starts But Runs Irregularly or Misses

1. Spark plugs in bad condition or partially fouled.
2. Spark plug gap too close or too wide.
3. Faulty ignition coil(s), ECM, or sensor.
4. Battery nearly discharged.
5. Damaged wire or loose connection at battery terminals, coil(s) or ECM connector.
6. Intermittent short circuit due to damaged wire insulation.
7. Water or dirt in fuel system.
8. Fuel tank vent system plugged.
9. Air leak at intake manifold or air filter.
10. Loose or dirty ECM connector.
11. Faulty Sensor(s): Manifold Absolute Pressure (MAP) or Crank Position (CKP).
12. Incorrect valve timing.
13. Weak or inoperative valve springs.
14. Damaged intake or exhaust valve.

Spark Plug Fouls Repeatedly

1. Fuel mixture too rich.
2. Incorrect spark plug for the kind of service.
3. Piston rings badly worn or inoperative.
4. Valve guides or seals badly worn.

Pre-Ignition or Detonation (Knocks or Pings)

1. Fuel octane rating too low.
2. Faulty spark plugs.

3. Incorrect spark plug.
4. Excessive carbon deposit on piston head or in combustion chamber.
5. Ignition timing advanced due to faulty sensors (MAP and/or CKP).
6. Air leak.

Overheating

1. Insufficient oil supply or oil not circulating.
2. Insufficient air flow over engine.
3. Heavy carbon deposit.
4. Ignition timing retarded due to faulty sensor(s): Manifold Absolute Pressure (MAP) and/or Crank Position (CKP).
5. Leaking valve.
6. Radiator dirty, plugged.
7. Insufficient coolant supply.
8. Vent hose crimped.
9. Air in cooling system.

Valve Train Noise

1. Low oil pressure caused by oil feed pump not functioning properly or oil passages obstructed.
2. Valve sticking in guide.
3. Chain tensioning spring or shoe worn.
4. Cam timing incorrect.
5. Secondary cam tensioner out of range.

Excessive Vibration

1. Wheels and/or tires worn or damaged.
2. Engine/transmission/rear wheel not aligned properly.
3. Upper engine mounting bracket loose/inoperative or mounting bracket pre-loaded.
4. Ignition timing advanced due to faulty sensor inputs (MAP and/or CKP)/poorly tuned engine.
5. Internal engine problem.
6. Inoperative frame.
7. Engine counterbalancer out of time or bearing failed.
8. Exhaust system binding or hitting frame.

Check Engine Light Illuminates During Operation

Fault detected. See the electrical diagnostic manual.

LUBRICATION SYSTEM

Engine Uses Too Much Oil or Smokes Excessively

1. Restricted breather operation.
2. Restricted oil filter.
3. Piston rings badly worn or broken.
4. Valve guides or seals worn.
5. Oil diluted with gas.

Engine Leaks Oil from Cases, Hoses, etc.

1. Loose parts.
2. Imperfect seal at gaskets, washers, etc.
3. Restricted breather hose to air filter.
4. Restricted oil filter.
5. Porosity.

Low Oil Pressure

1. Oil sump underfilled.
2. Faulty low oil pressure switch.
3. Oil pump O-ring damaged or missing.
4. Bypass valve stuck in open position.
5. Oil diluted with gas.
6. Open in oiling circuit.

High Oil Pressure

1. Oil sump overfilled.
2. Bypass valve stuck in closed position.

ELECTRICAL SYSTEM

NOTE

For diagnostic information see the electrical diagnostic manual.

Alternator Does Not Charge

1. Voltage regulator module not grounded.
2. Engine ground wire loose or damaged.
3. Faulty voltage regulator module.
4. Loose or damaged wires in charging circuit.
5. Faulty stator and/or rotor.

Alternator Charge Rate is Below Normal

1. Weak or damaged battery.
2. Loose connections.
3. Faulty voltage regulator module.
4. Faulty stator and/or rotor.

Speedometer Operates Erratically

1. Contaminated vehicle speed sensor (remove sensor and clean off metal particles).
2. Loose connections.

TRANSMISSION

Shifts Hard

1. Clutch dragging slightly.
2. Shifter return spring (inside transmission) bent or inoperative.
3. Bent shifter rod.

4. Shifter forks (inside transmission) sprung.
5. Corners worn off shifter clutch dogs (inside transmission).
6. Hydraulic clutch circuit not bled correctly.

Jumps Out of Gear

1. Shifter rod improperly adjusted.
2. Shifter drum (inside transmission) damaged.
3. Shifter engaging parts (inside transmission) badly worn and rounded.
4. Shifter forks bent.
5. Damaged gears.

Clutch Slips

1. Insufficient clutch spring tension.
2. Worn friction discs.

Clutch Drags or Does Not Release

1. Clutch spring tension.
2. Clutch discs warped.
3. Clutch spacer missing or installed backwards.

Clutch Chatters

Friction discs or steel discs worn or warped.

HANDLING

Irregularities

1. Improperly loaded motorcycle. Non-standard equipment on the front end such as heavy radio receivers, extra lighting equipment or luggage tends to cause unstable handling.
2. Damaged tire(s) or improper front-rear tire combination.
3. Irregular or peaked front tire tread wear.
4. Incorrect tire pressure. See 3.9 TIRES.
5. Shock absorber not functioning normally.
6. Loose wheel axle nuts. Tighten to recommended torque specification.
7. Excessive wheel hub bearing play.
8. Rear wheel out of alignment with frame and front wheel.
9. Steering head bearings improperly adjusted. Correct adjustment and replace pitted or worn bearings and races. See 2.14 ADJUST STEERING HEAD BEARINGS.
10. Tire and wheel unbalanced.
11. Rims and tires out-of-round or eccentric with hub.
12. Rims and tires out-of-true sideways.
13. Rear fork loose on pivot shaft.

BRAKES

Brake Does Not Hold Normally

1. Brake fluid reservoir low, system leaking or pads worn.
2. Brake system contains air bubbles.
3. Master cylinder/caliper piston seals worn or parts damaged.
4. Brake pads contaminated with grease or oil.
5. Brake pads worn.
6. Brake disc worn or warped.
7. Brake drags - insufficient brake pedal or hand lever free play, caliper piston worn or damaged, or excessive brake fluid in reservoir.
8. Brake fades due to heat build up - brake pads dragging or excessive braking.
9. Brake fluid leak when under pressure.

SUBJECT	PAGE NO.
3.1 FASTENER TORQUE VALUES	3-1
3.2 SPECIFICATIONS	3-3
3.3 VEHICLE IDENTIFICATION NUMBER (VIN)	3-5
3.4 FRONT WHEEL	3-7
3.5 REAR WHEEL	3-10
3.6 REAR WHEEL COMPENSATOR	3-14
3.7 WHEEL RUNOUT	3-16
3.8 SEALED WHEEL BEARINGS	3-17
3.9 TIRES	3-20
3.10 WHEEL ALIGNMENT	3-23
3.11 FRONT BRAKE MASTER CYLINDER	3-24
3.12 FRONT BRAKE CALIPER	3-26
3.13 REAR BRAKE MASTER CYLINDER	3-27
3.14 REAR BRAKE CALIPER	3-29
3.15 BRAKE LINES	3-30
3.16 BLEED BRAKES	3-32
3.17 SIDE COVERS	3-34
3.18 FRONT FORK	3-35
3.19 STEERING HEAD/FORK STEM AND BRACKET ASSEMBLY	3-40
3.20 REAR FORK	3-42
3.21 BELT GUARDS	3-44
3.22 SHOCK ABSORBERS	3-46
3.23 CLUTCH CONTROL	3-48
3.24 THROTTLE CONTROL	3-51
3.25 HEADLAMP FAIRING	3-54
3.26 HAND GRIPS	3-56
3.27 HANDLEBAR	3-57
3.28 MIRRORS	3-59
3.29 FRONT FENDER	3-60
3.30 REAR FENDER	3-61
3.31 SAREE GUARD	3-62
3.32 FRONT LICENSE PLATE BRACKET	3-63
3.33 REAR LICENSE PLATE BRACKET	3-64
3.34 RIDER FOOT CONTROLS	3-65
3.35 PASSENGER FOOTPEGS	3-69
3.36 SEAT	3-70
3.37 JIFFY STAND	3-72

NOTES

FASTENER TORQUE VALUES IN THIS CHAPTER

The table below lists torque values for all fasteners presented in this chapter.

FASTENER	TORQUE VALUE		NOTES
Brake caliper bleeder screw	3.9-6.9 Nm	35-61 **in-lbs**	3.16 BLEED BRAKES, Drain
Brake caliper bleeder screw	3.9-6.9 Nm	35-61 **in-lbs**	3.16 BLEED BRAKES, Fill and Bleed
Brake master cylinder reservoir cover screw	2.0-4.0 Nm	18-35 **in-lbs**	3.16 BLEED BRAKES, Fill and Bleed
Clutch hand control bracket screw	4.9-6.1 Nm	44-53 **in-lbs**	3.23 CLUTCH CONTROL, Install
Engine mount screw	22.0-29.0 Nm	17-21 ft-lbs	3.34 RIDER FOOT CONTROLS, Install
Fork slider tube screw	14.9-24.4 Nm	11-17 ft-lbs	3.18 FRONT FORK, Assemble
Fork stem pinch screw	50.0-60.0 Nm	37-44 ft-lbs	3.19 STEERING HEAD/FORK STEM AND BRACKET ASSEMBLY, Install
Fork stem screw, first torque	22.6 Nm	200**in-lbs**	3.19 STEERING HEAD/FORK STEM AND BRACKET ASSEMBLY, Install
Fork stem screw, second torque	8.5 Nm	75**in-lbs**	3.19 STEERING HEAD/FORK STEM AND BRACKET ASSEMBLY, Install
Fork tube cap	24.5-28.5 Nm	18-21 ft-lbs	3.18 FRONT FORK, Install
Fork tube cap	24.5-28.5 Nm	18-21 ft-lbs	3.18 FRONT FORK, Drain and Fill Forks
Front axle nut	81.3-88.1 Nm	60-64 ft-lbs	3.4 FRONT WHEEL, Install
Front axle pinch bolt	12.5-14.4 Nm	111-127 **in-lbs**	3.4 FRONT WHEEL, Install
Front belt guard bracket to engine screw	10.0-12.0 Nm	89-106 **in-lbs**	3.21 BELT GUARDS, Install
Front belt guard screw	9.0-11.0 Nm	80-97 **in-lbs**	3.21 BELT GUARDS, Install
Front brake caliper banjo bolt	17.0-20.0 Nm	13-14 ft-lbs	3.12 FRONT BRAKE CALIPER, Install
Front brake caliper mounting screw	20.0-24.0 Nm	15-17 ft-lbs	3.12 FRONT BRAKE CALIPER, Install
Front brake disc screw	21.7-32.5 Nm	16-24 ft-lbs	3.4 FRONT WHEEL, Assemble
Front brake line clamp screw	7.2-8.8 Nm	64-77 **in-lbs**	3.15 BRAKE LINES, Install
Front brake master cylinder banjo bolt	17.0-20.0 Nm	13-14 ft-lbs	3.11 FRONT BRAKE MASTER CYLINDER, Install
Front brake master cylinder clamp screw	9.0-12.0 Nm	80-106 **in-lbs**	3.11 FRONT BRAKE MASTER CYLINDER, Install
Front fender screw	22.9-28.1 Nm	17-20 ft-lbs	3.29 FRONT FENDER, Install
Front license plate bracket screw	6.2-6.8 Nm	55-60 **in-lbs**	3.32 FRONT LICENSE PLATE BRACKET, Install
Headlamp fairing screw	2.3-3.3 Nm	21-29 **in-lbs**	3.25 HEADLAMP FAIRING, Install
Jiffy stand sensor screw	9.0-11.0 Nm	80-97 **in-lbs**	3.34 RIDER FOOT CONTROLS, Install
Left side rider foot control screw	22.0-29.0 Nm	17-21 ft-lbs	3.34 RIDER FOOT CONTROLS, Install
License plate module screw	2.3-3.3 Nm	21-29 **in-lbs**	3.33 REAR LICENSE PLATE BRACKET, Install
Lower belt guard screw	2.3-3.3 Nm	21-29 **in-lbs**	3.21 BELT GUARDS, Install
Lower fork bracket pinch screw	34.3-39.2 Nm	26-28 ft-lbs	3.18 FRONT FORK, Install
Lower handlebar riser screw	42.7-47.3 Nm	32-34 ft-lbs	3.27 HANDLEBAR, Install
Mirror mount	11.7-14.3 Nm	104-126 **in-lbs**	3.28 MIRRORS, Install
Mirror tube nut	11.7-14.3 Nm	104-126 **in-lbs**	3.28 MIRRORS, Install
Rear axle nut	190.0-203.0 Nm	140-150 ft-lbs	3.5 REAR WHEEL, Install
Rear brake caliper banjo bolt	17.0-20.0 Nm	13-14 ft-lbs	3.14 REAR BRAKE CALIPER, Install
Rear brake caliper mounting screw	20.0-24.0 Nm	15-17 ft-lbs	3.14 REAR BRAKE CALIPER, Install
Rear brake disc screw	40.7-61.0 Nm	30-45 ft-lbs	3.5 REAR WHEEL, Assemble

FASTENER	TORQUE VALUE		NOTES
Rear brake lever screw	7.0-9.0 Nm	62-79 **in-lbs**	3.34 RIDER FOOT CONTROLS, Assemble
Rear brake line clamp screw	7.2-8.8 Nm	64-77 **in-lbs**	3.15 BRAKE LINES, Install
Rear brake master cylinder banjo bolt	17.0-20.0 Nm	13-14 ft-lbs	3.13 REAR BRAKE MASTER CYLINDER, Install
Rear brake master cylinder mounting screw	9.5-10.5 Nm	84-92 **in-lbs**	3.13 REAR BRAKE MASTER CYLINDER, Install
Rear fender screw	45.0-55.0 Nm	34-40 ft-lbs	3.30 REAR FENDER, Install
Rear fender screw	45.0-55.0 Nm	34-40 ft-lbs	3.31 SAREE GUARD, Install
Rear fender screw	45.0-55.0 Nm	34-40 ft-lbs	3.31 SAREE GUARD, Install
Rear fork pivot shaft nut	110.0-120.0 Nm	82-88 ft-lbs	3.20 REAR FORK, Install
Screw, cable retaining plate	0.9-1.1 Nm	8-9 **in-lbs**	3.24 THROTTLE CONTROL, Install
Screw, switch housing	0.9-1.1 Nm	8-9 **in-lbs**	3.24 THROTTLE CONTROL, Install
Screw, switch housing	0.9-1.1 Nm	8-9 **in-lbs**	3.24 THROTTLE CONTROL, Install
Seat retention screw	2.3-4.5 Nm	21-39 **in-lbs**	3.36 SEAT, Install
Seat strap screw	9.0-11.0 Nm	80-97 **in-lbs**	3.36 SEAT, Install
Shift lever rod assembly screw	4.6-6.1 Nm	41-53 **in-lbs**	3.34 RIDER FOOT CONTROLS, Install
Shift lever rod assembly screw	4.6-6.1 Nm	41-53 **in-lbs**	3.34 RIDER FOOT CONTROLS, Assemble
Shock absorber lower screw	61.0-68.0 Nm	45-50 ft-lbs	3.22 SHOCK ABSORBERS, Install
Shock absorber upper screw	61.0-68.0 Nm	45-50 ft-lbs	3.22 SHOCK ABSORBERS, Install
Upper belt guard screw	2.3-3.3 Nm	21-29 **in-lbs**	3.21 BELT GUARDS, Install
Upper fork bracket pinch screw	50.0-60.0 Nm	37-44 ft-lbs	3.18 FRONT FORK, Install
Upper handlebar riser screw	22.8-25.2 Nm	17-18 ft-lbs	3.27 HANDLEBAR, Install
Valve stem nut	1.4-1.7 Nm	12-15 **in-lbs**	3.4 FRONT WHEEL, Assemble
Valve stem nut	1.4-1.7 Nm	12-15 **in-lbs**	3.5 REAR WHEEL, Assemble

CHASSIS

General

Table 3-1. Dimensions

ITEM	XG500		XG750	
	MM	IN	MM	IN
Length	2226	87.6	2226	87.6
Overall width	815	32.1	815	32.1
Overall height	1058	41.7	1058	41.7
Wheelbase	1535	60.4	1535	60.4
Road clearance	144	5.7	144	5.7
Seat height*	654	25.7	654	25.7
*With 81.7 kg (180 lb.) rider on seat.				

⚠WARNING

Do not exceed the motorcycle's Gross Vehicle Weight Rating (GVWR) or Gross Axle Weight Rating (GAWR). Exceeding these weight ratings can lead to component failure and adversely affect stability, handling and performance, which could result in death or serious injury. (00016f)

- GVWR is sum of weight of motorcycle, accessories and maximum weight of rider, passenger and cargo that can be safely carried.
- GAWR is maximum amount of weight that can be safely carried on each axle.
- The GVWR and GAWR are shown on information plate, on frame downtube.

NOTE

The maximum additional weight allowed on motorcycle equals Gross Vehicle Weight Rating (GVWR) minus running weight. For example, a motorcycle with GVWR of 544 kg (1200 lbs) having a running weight of 363 kg (800 lbs), would allow a maximum of an additional 181 kg (400 lbs) combined weight of rider, passenger, riding gear, cargo and installed accessories.

Table 3-2. Weights

ITEM	XG500		XG750	
	KG	LB	KG	LB
Running weight*	218	480	218	480
Maximum added weight allowed**	182	402	182	402
GVWR	400	882	400	882
GAWR Front	114	252	114	252
GAWR Rear	286	630	286	630
*The total weight of the motorcycle as delivered with oil/fluids and approximately 90% of fuel. **The total weight of accessories, cargo, riding gear, passenger and rider must not exceed this weight.				

Table 3-3. Capacities

ITEM	CAPACITY
Fuel tank	13.2 L (3.5 gal)
Low fuel indicator	3.02 L (0.8 gal) (approximate)
Engine oil (wet)	3.0 L (3.2 qt)
Engine oil (dry)	3.1 L (3.3 qt)
Coolant	1.3 L (1.4 qt gal)

Wheels and Tires

⚠WARNING

Use only Harley-Davidson specified tires. See a Harley-Davidson dealer. Using non-specified tires can adversely affect stability, handling or braking, which could result in death or serious injury. (00024b)

See 3.9 TIRES for important information regarding tire data and tire inflation.

Table 3-4. Wheel, Brake Disc and Tire Runout

RUNOUT	MM	IN
Wheel - rim lateral	0.76	0.030
Wheel - rim radial	0.76	0.030
Front brake disc - lateral	0.2	0.008
Rear brake disc - lateral	0.2	0.008
Tire - lateral	2.29	0.090
Tire - radial	2.29	0.090

Table 3-5. Tires and Tire Pressure

MODEL	MOUNT	SIZE	SPECIFIED TIRE	PRESSURE (COLD)	
				kPa	PSI
XG500/XG750	Front	17 in	MRF Zapper (India only): 100/80-17	207	30
XG500/XG750	Rear	15 in	MRF Zapper (India only): 150/70/15 67H	276	40
XG500/XG750	Front	17 in	Michelin Scorcher 11: 100/80 R17	234	34
XG500/XG750	Rear	15 in	Michelin Scorcher 11: 140/75 R15	290	42

Table 3-6. Fork Oil Level

MODEL	mm	in
XG500	160	6.30
XG750	160	6.30

VEHICLE IDENTIFICATION NUMBER (VIN)

General

A unique 17-digit serial or Vehicle Identification Number (VIN) is assigned to each motorcycle. Refer to Table 3-7.

Location

See Figure 3-1. The full 17-digit VIN is stamped on the right side of the frame near the steering head. In some destinations, a printed VIN label is also attached on the front downtube.

Abbreviated VIN

An abbreviated VIN showing the vehicle model, engine type, model year, and sequential number is stamped on the left side of the crankcase between the engine cylinders.

NOTE

Always give the full 17-digit Vehicle Identification Number when ordering parts or making any inquiry about your motorcycle.

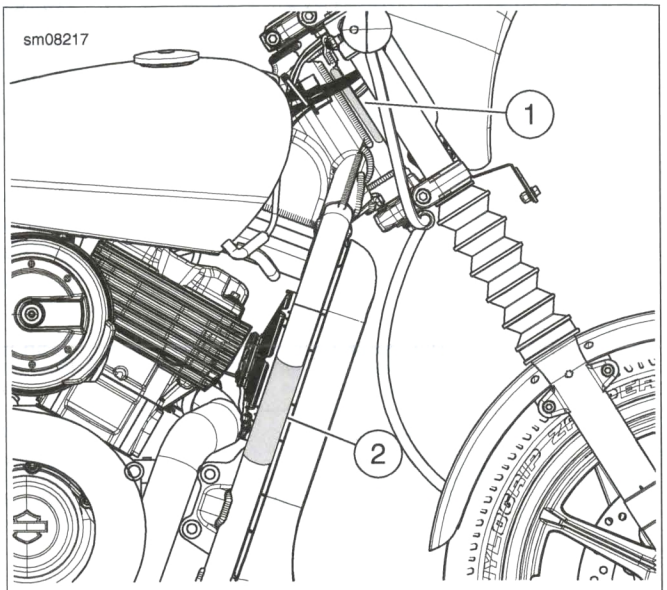

1. **Stamped VIN**
2. **VIN label**

Figure 3-1. VIN Locations

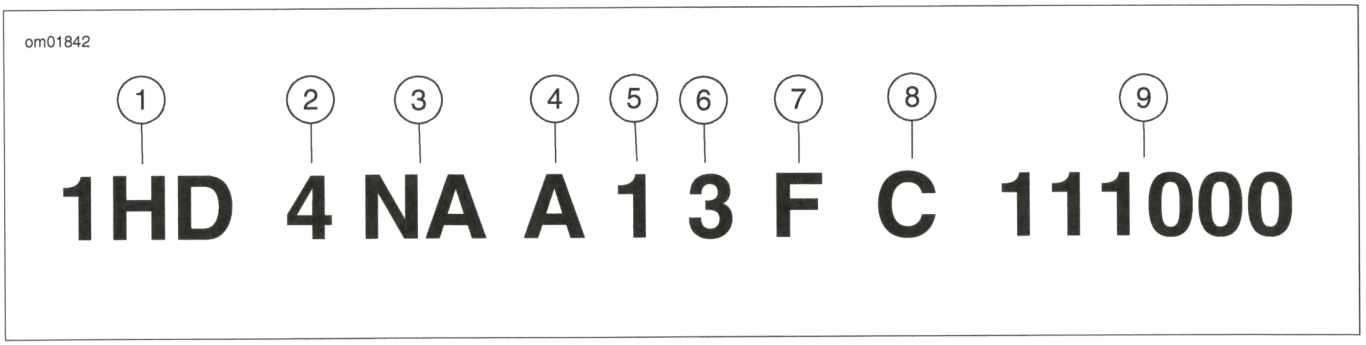

Figure 3-2. Typical Harley-Davidson VIN: 2015 Street Models

Table 3-7. Harley-Davidson VIN Breakdown: 2015 Street Models

POSITION	DESCRIPTION	POSSIBLE VALUES
1	World manufacturer identifier	1HD=Originally manufactured in the United States 5HD=Originally manufactured in the United States for sale outside the United States MEG=Originally manufactured in India
2	Motorcycle type	4=Middleweight motorcycle (351 cm^3 to 900 cm^3)
3	Model	NA=XG500 NB=XG750
4	Engine type	A=Revolution X™ 500 cm^3 liquid-cooled, fuel-injected B=Revolution X™ 750 cm^3 liquid-cooled, fuel-injected

Table 3-7. Harley-Davidson VIN Breakdown: 2015 Street Models

POSITION	DESCRIPTION	POSSIBLE VALUES	
5	Configuration/calibration, introduction	**Normal Introduction** 1=Domestic (DOM) 3=California (CAL) A=Canada (CAN) C=HDI E=Japan (JPN) G=Australia (AUS) J=Brazil (BRZ) L=Asia Pacific (APC) N=India (IND)	**Mid-year or Special Introduction** 2, 4=Domestic (DOM) 5, 6=California (CAL) B=Canada (CAN) D=HDI F=Japan (JPN) H=Australia (AUS) K=Brazil (BRZ) M=Asia Pacific (APC) P=India (IND)
6	VIN check digit	Can be 0-9 or X	
7	Model year	F=2015	
8	Assembly plant	C=Kansas City, MO U.S.A. N=Haryana India (Bawal District Rewari)	
9	Sequential number	Varies	

PREPARE

1. Raise front wheel. See 2.2 GENERAL, Secure the Motorcycle for Service.
2. Check wheel bearing end play. See 3.8 SEALED WHEEL BEARINGS.

REMOVE

1. See Figure 3-3. Remove front wheel.
   a. Loosen pinch bolt (2).
   b. Remove nut (10) and washer (9).
   c. Remove front axle (4), left external spacer (7) and right external spacer (6).
   d. Remove front wheel (1).

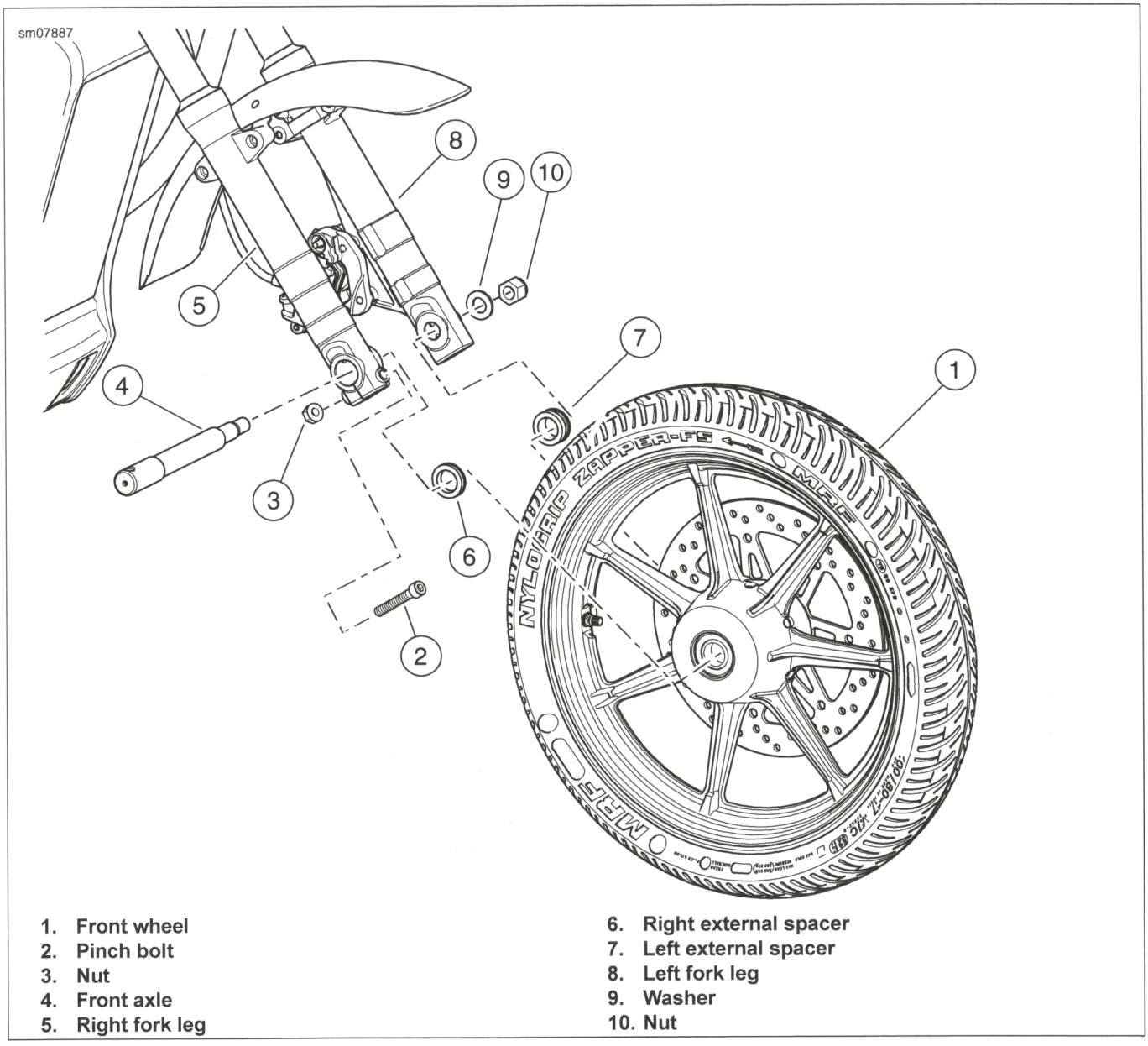

1. **Front wheel**
2. **Pinch bolt**
3. **Nut**
4. **Front axle**
5. **Right fork leg**
6. **Right external spacer**
7. **Left external spacer**
8. **Left fork leg**
9. **Washer**
10. **Nut**

Figure 3-3. Front Wheel

INSTALL

FASTENER	TORQUE VALUE	
Front axle nut	81.3-88.1 Nm	60-64 ft-lbs
Front axle pinch bolt	12.5-14.4 Nm	111-127 **in-lbs**

1. See Figure 3-3. Install front wheel.
   a. Apply a light coat of ANTI-SEIZE LUBRICANT to front axle (4), wheel bearing bores, and bore of the inner sleeve.
   b. Align front wheel (1) between front fork legs (5, 8).
   c. Install front axle through right fork leg (5), right external spacer (6), front wheel, left external spacer (7) and left fork leg (8).
   d. Install washer (9) and nut (10).
2. Tighten front axle nut to 81.3-88.1 Nm (60-64 ft-lbs).
3. See Figure 3-3. Tighten pinch bolt (2) to 12.5-14.4 Nm (111-127 **in-lbs**).

DISASSEMBLE

1. See Figure 3-4. Remove front brake disc.
   a. Discard screws (3).
   b. Remove front brake disc (2).
2. Remove front tire. See 3.9 TIRES.
3. See Figure 3-5. Remove valve stem.
   a. Remove valve stem cap (5).
   b. Remove nut (4).
   c. Remove washer (3).
   d. Remove valve stem (1) from wheel (2).
4. Remove sealed wheel bearings. See 3.8 SEALED WHEEL BEARINGS.
5. See Figure 3-6. Remove front axle spacer (3).

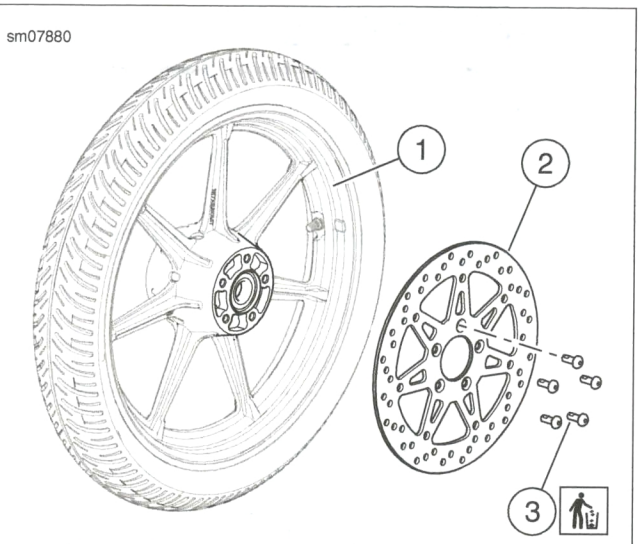

1. **Front wheel**
2. **Front brake disc**
3. **Screw (5)**

Figure 3-4. Front Brake Disc

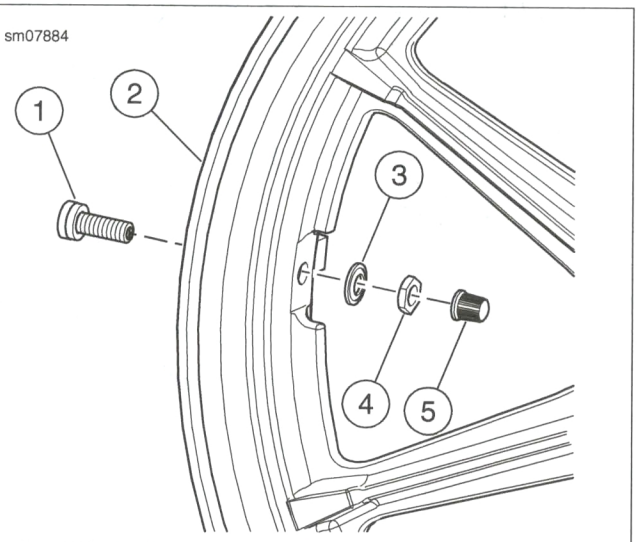

1. **Valve stem**
2. **Wheel**
3. **Washer**
4. **Nut**
5. **Valve stem cap**

Figure 3-5. Tire Valve Stem

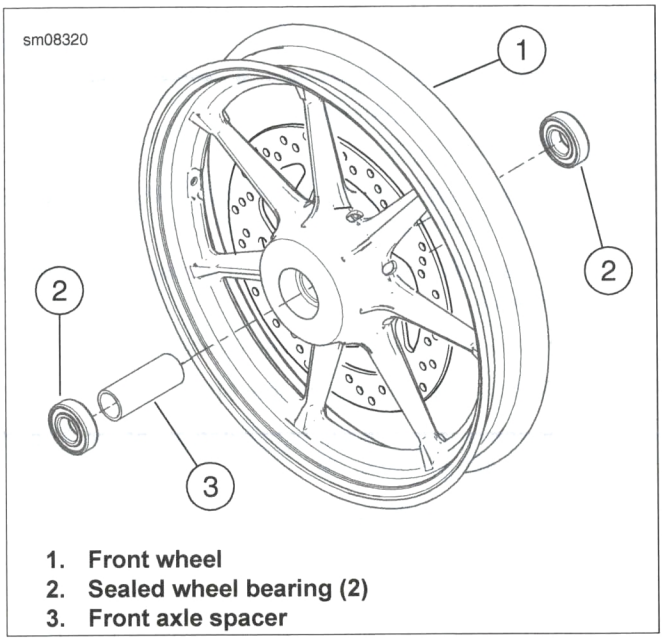

1. **Front wheel**
2. **Sealed wheel bearing (2)**
3. **Front axle spacer**

Figure 3-6. Front Wheel Asssembly

CLEAN AND INSPECT

1. Clean all parts thoroughly.
2. Inspect front wheel for damage. Replace or repair as necessary.
3. Check wheel runout. See 3.7 WHEEL RUNOUT.

ASSEMBLE

FASTENER	TORQUE VALUE	
Valve stem nut	1.4-1.7 Nm	12-15 **in-lbs**
Front brake disc screw	21.7-32.5 Nm	16-24 ft-lbs

1. See Figure 3-5. Install valve stem.
   a. Install valve stem (1) in wheel (2).
   b. Install washer (3).
   c. Install nut (4). Tighten to 1.4-1.7 Nm (12-15 **in-lbs**)
   d. Install valve stem cap (5).
2. Install tire. See 3.9 TIRES.
3. See Figure 3-6. Install front axle spacer (3).
4. Install sealed wheel bearings. See 3.8 SEALED WHEEL BEARINGS.

NOTICE

Do not re-use brake disc/rotor screws. Re-using these screws can result in torque loss and damage to brake components. (00319c)

5. See Figure 3-4. Install front brake disc.
   a. Align front brake disc (2) with front wheel (1).
   b. Install **new** screws (3). Tighten to 21.7-32.5 Nm (16-24 ft-lbs).

COMPLETE

1. Lower front wheel.

PREPARE

1. Raise rear wheel. See 2.2 GENERAL, Secure the Motorcycle for Service.
2. Check wheel bearing end play. See 3.8 SEALED WHEEL BEARINGS.
3. Check compensator sprocket isolator wear. See 2.20 INSPECT REAR WHEEL COMPENSATOR.

REMOVE

PART NUMBER	TOOL NAME
HD-47925	AXLE NUT TORQUE ADAPTER

NOTE

The AXLE NUT TORQUE ADAPTER allows the axle nut to be loosened and tightened without removing the muffler.

1. See Figure 3-7. Remove rear wheel.
   a. Remove clip (2).
   b. Loosen axle nut (3) using AXLE NUT TORQUE ADAPTER (Part No. HD-47925).
   c. Loosen axle adjuster nuts (12) and slide rear wheel forward.
   d. Remove drive belt from rear sprocket.
   e. Remove axle nut and washer (4).
   f. Remove rear axle (9), right external spacer (7) and left external spacer (8).
   g. Remove rear wheel (1).

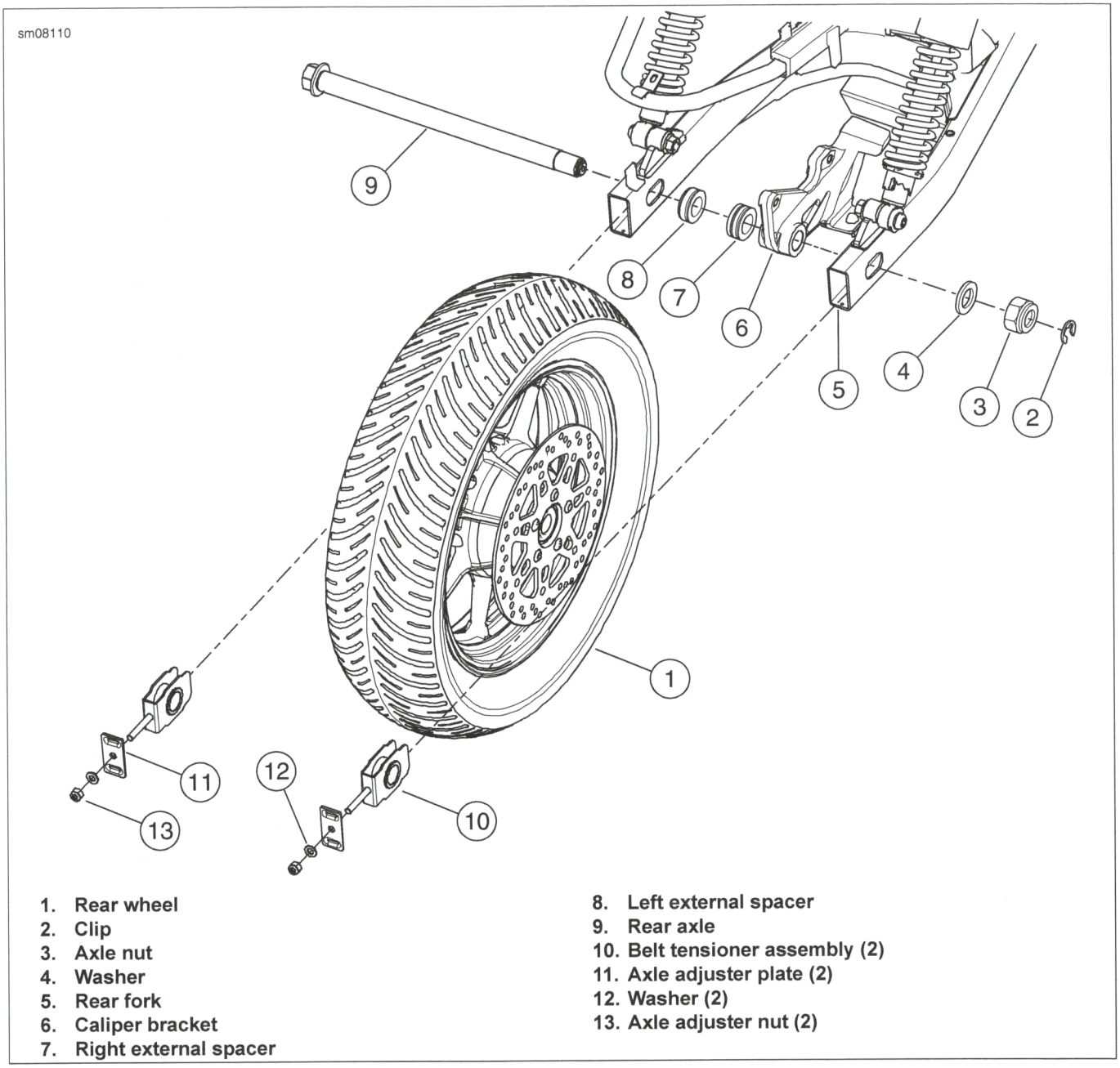

1. Rear wheel
2. Clip
3. Axle nut
4. Washer
5. Rear fork
6. Caliper bracket
7. Right external spacer
8. Left external spacer
9. Rear axle
10. Belt tensioner assembly (2)
11. Axle adjuster plate (2)
12. Washer (2)
13. Axle adjuster nut (2)

Figure 3-7. Rear Wheel

INSTALL

PART NUMBER	TOOL NAME
HD-47925	AXLE NUT TORQUE ADAPTER

FASTENER	TORQUE VALUE	
Rear axle nut	190.0-203.0 Nm	140-150 ft-lbs

1. See Figure 3-7. Install rear wheel.
   a. Apply a light coat of ANTI-SEIZE LUBRICANT to rear axle (9), wheel bearing bores, and bore of the inner sleeve.
   b. Install rear axle through left leg of rear fork, drive belt and left external spacer (8).
   c. Align rear wheel (1) to rear fork (5).
   d. Install rear axle through rear wheel.
   e. Install rear axle through right external spacer (7), caliper mount (6) and right leg of rear fork.
   f. Install washer (4) and axle nut (3). Hand-tighten.
   g. Slide rear axle forward. Install drive belt on front and rear sprockets.
2. Align rear wheel. See 3.10 WHEEL ALIGNMENT.
3. Adjust drive belt deflection. See 5.4 DRIVE BELT.
4. See Figure 3-7. Tighten rear axle nut (3) to 190.0-203.0 Nm (140-150 ft-lbs) using AXLE NUT TORQUE ADAPTER (Part No. HD-47925).
5. Install clip (2).

DISASSEMBLE

1. See Figure 3-8. Remove rear brake disc.
   a. Discard screws (3).
   b. Remove rear brake disc (2).
2. Remove rear wheel compensator. See 3.6 REAR WHEEL COMPENSATOR.
3. Remove rear tire. See 3.9 TIRES.
4. See Figure 3-9. Remove valve stem.
   a. Remove valve stem cap (5).
   b. Remove nut (4).
   c. Remove washer (3).
   d. Remove valve stem (1) from wheel (2).
5. Remove sealed wheel bearings. See 3.8 SEALED WHEEL BEARINGS.
6. See Figure 3-10. Remove rear axle spacer (3).

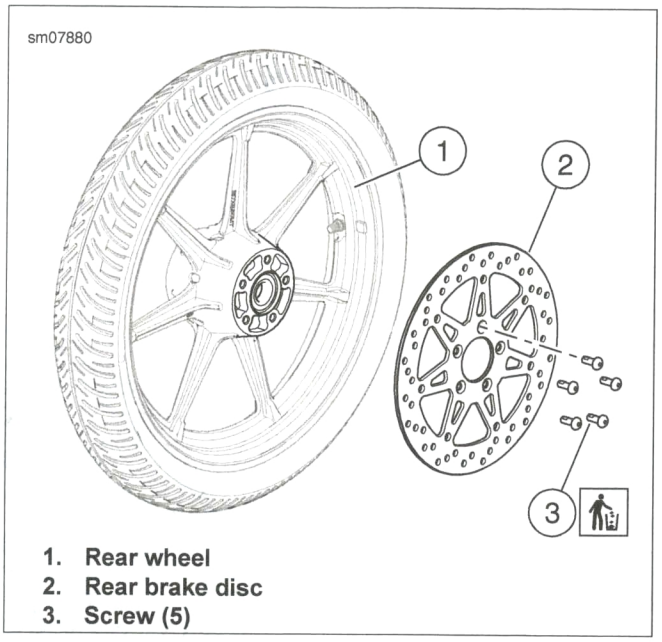

1. **Rear wheel**
2. **Rear brake disc**
3. **Screw (5)**

Figure 3-8. Rear Brake Disc

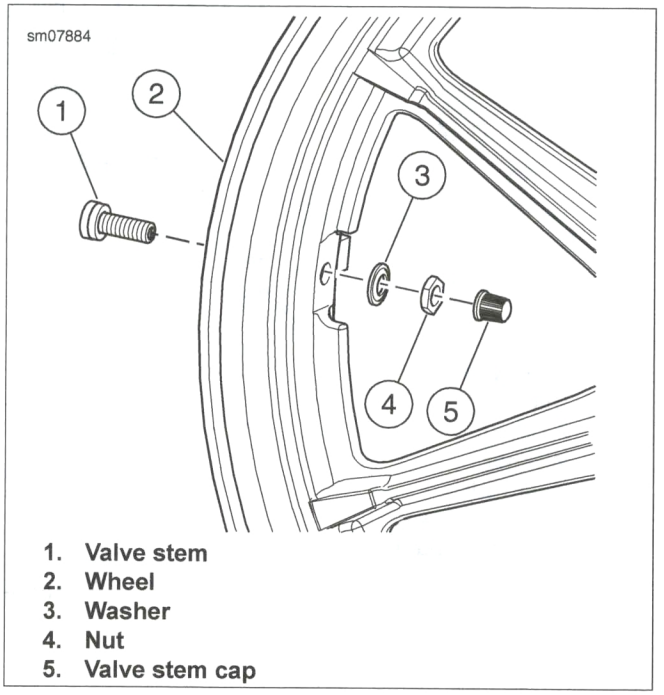

1. **Valve stem**
2. **Wheel**
3. **Washer**
4. **Nut**
5. **Valve stem cap**

Figure 3-9. Tire Valve Stem

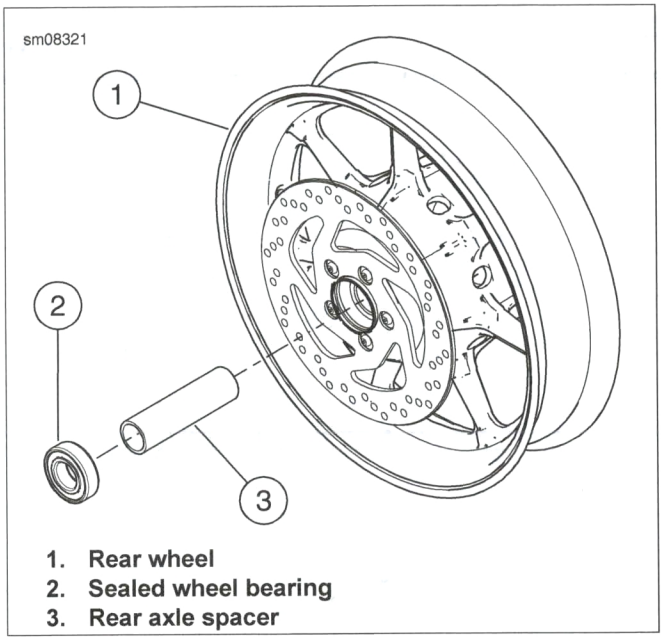

1. **Rear wheel**
2. **Sealed wheel bearing**
3. **Rear axle spacer**

Figure 3-10. Rear Wheel Assembly

CLEAN AND INSPECT

1. Clean all parts thoroughly.
2. Inspect rear wheel for damage. Replace or repair as necessary.
3. Check wheel runout. See 3.7 WHEEL RUNOUT.

ASSEMBLE

FASTENER	TORQUE VALUE	
Valve stem nut	1.4-1.7 Nm	12-15 **in-lbs**
Rear brake disc screw	40.7-61.0 Nm	30-45 ft-lbs

1. See Figure 3-9. Install valve stem.
   a. Install valve stem (1) in wheel (2).
   b. Install washer (3).
   c. Install nut (4). Tighten to 1.4-1.7 Nm (12-15 **in-lbs**)
   d. Install valve stem cap (5).
2. Install tire. See 3.9 TIRES.
3. See Figure 3-10. Install rear axle spacer (3).
4. Install sealed wheel bearings. See 3.8 SEALED WHEEL BEARINGS.
5. Install rear wheel compensator. See 3.6 REAR WHEEL COMPENSATOR.

NOTICE

Do not re-use brake disc/rotor screws. Re-using these screws can result in torque loss and damage to brake components. (00319c)

6. See Figure 3-8. Install rear brake disc.
   a. Align rear brake disc (2) with rear wheel (1).
   b. Install **new** screws (3). Tighten to 40.7-61.0 Nm (30-45 ft-lbs).

COMPLETE

1. Lower rear wheel.

PREPARE

1. Check compensator sprocket isolator for wear. See 2.20 INSPECT REAR WHEEL COMPENSATOR.
2. Remove rear wheel. See 3.5 REAR WHEEL.

REMOVE

1. See Figure 3-11. Remove rear wheel compensator.
   a. Pull sprocket (1) from rear wheel (3).
   b. Remove isolator (2) from wheel. Discard isolator.

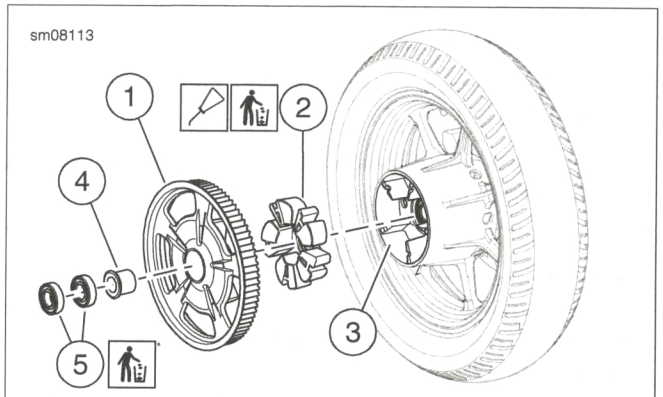

1. **Rear sprocket**
2. **Isolator**
3. **Rear wheel**
4. **Spacer**
5. **Sprocket bearing (2)**

Figure 3-11. Rear Wheel Compensator

INSTALL

1. Install **new** rear wheel compensator.
   a. See Figure 3-12. Lubricate each segment (2) of **new** isolator with equal mix of isopropyl alcohol and water.
   b. Push **new** isolator into wheel. Verify that each isolator segment is completely installed and is flush with each rib (1).
   c. See Figure 3-11. Push sprocket (1) onto wheel (3).

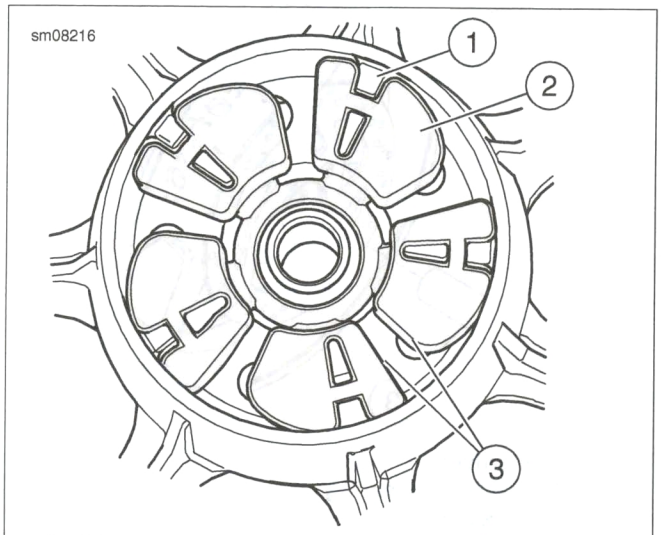

1. **Rib**
2. **Isolator segment**
3. **Sprocket lug gap**

Figure 3-12. Install Isolator in Wheel

DISASSEMBLE

PART NUMBER	TOOL NAME
HD-48921	REAR WHEEL COMPENSATOR SPROCKET BEARING REMOVER/INSTALLER

1. See Figure 3-11. Remove rear wheel compensator bearings (5).
   a. See Figure 3-13. Support the base (1) of REAR WHEEL COMPENSATOR SPROCKET BEARING REMOVER/INSTALLER (Part No. HD-48921) on a suitable press with the large OD facing up and the long pin facing down.
   b. Slide sleeve (2) over the short pin.
   c. With the inboard side facing up, slide the sprocket over the sleeve until it rests on the base.
   d. Slide the small OD of driver (3) over the sleeve until it contacts the spacer.
   e. Apply pressure to the driver until bearings drop into base.
2. Disassemble tool.
3. See Figure 3-11. Discard bearings (5).

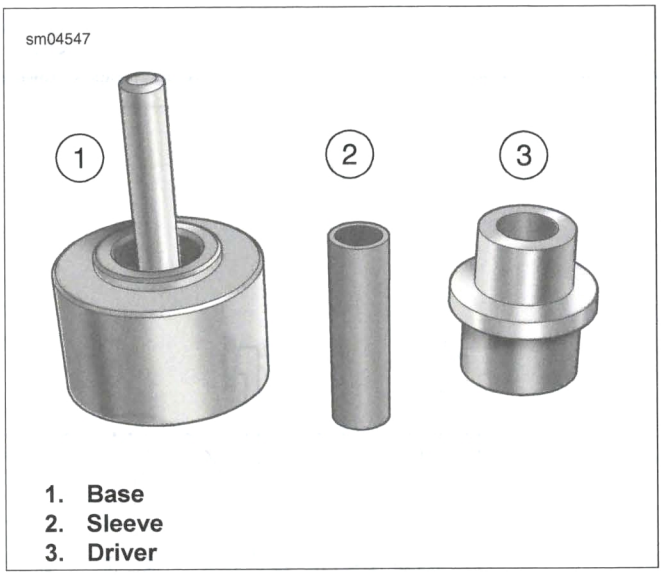

1. **Base**
2. **Sleeve**
3. **Driver**

Figure 3-13. Rear Wheel Compensator Bearing Remover/Installer (HD-48921)

CLEAN AND INSPECT

1. Clean all parts thoroughly. Verify that sprocket bearing bore is clean and dry.
2. Inspect each tooth of the rear wheel sprocket for wear or damage. See 2.20 INSPECT REAR WHEEL COMPENSATOR..

ASSEMBLE

PART NUMBER	TOOL NAME
HD-48921	REAR WHEEL COMPENSATOR SPROCKET BEARING REMOVER/INSTALLER

1. See Figure 3-11. Install spacer (4) and **new** rear wheel compensator bearings (5).
   a. See Figure 3-13. Support the base (1) of REAR WHEEL COMPENSATOR SPROCKET BEARING REMOVER/INSTALLER (Part No. HD-48921) on a suitable press with the large OD facing up and the long pin facing down.
   b. Slide sleeve (2) over the short pin.
   c. With the outboard side facing up, slide the sprocket over the sleeve until it rests on the base.
   d. Install spacer in the sprocket with the small diameter facing down.
   e. Set first **new** bearing in place.
   f. Center the large OD of driver (3) onto the bearing. Verify that the driver contacts complete radius of the outer bearing race.
   g. Apply pressure to the driver until the bearing is firmly seated in the counterbore of the sprocket.
   h. Repeat for second **new** bearing.

COMPLETE

1. Install rear wheel. See 3.5 REAR WHEEL.

PREPARE

1. Remove wheel. See 3.4 FRONT WHEEL or 3.5 REAR WHEEL.
2. Check wheel bearings. See 3.8 SEALED WHEEL BEARINGS.

INSPECT

PART NUMBER	TOOL NAME
HD-99500-80	WHEEL TRUING AND BALANCING STAND

Wheel Stand

1. Mount wheel in a WHEEL TRUING AND BALANCING STAND (Part No. HD-99500-80).
   a. Install the truing arbor in the wheel hub so that the hub spins freely on its bearings.
2. Mount a gauge rod or a dial indicator to the base of the truing stand.

Lateral Runout

1. Check lateral wheel runout.
   a. See Figure 3-14. Point the gauge rod or indicator at the rim bead flange.
   b. Rotate the wheel and measure the lateral distance at several locations.
   c. Compare readings to specifications. Refer to Table 3-4.
   d. Replace as necessary.

Radial Runout

1. Check radial wheel runout.
   a. See Figure 3-15. Point the gauge rod or indicator at the rim tire bead safety hump.
   b. Rotate the wheel and measure the lateral distance at several locations.
   c. Replace as necessary.

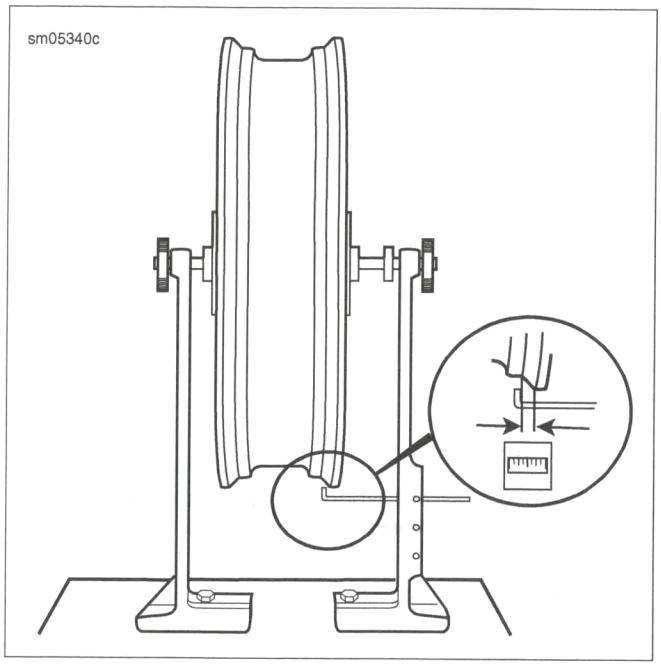

Figure 3-14. Lateral Runout

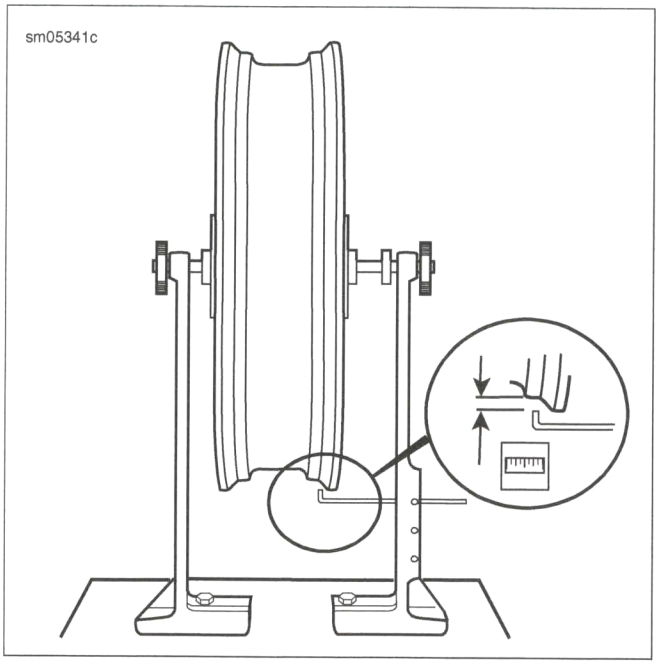

Figure 3-15. Radial Runout

COMPLETE

1. Install wheel. See 3.4 FRONT WHEEL or 3.5 REAR WHEEL.

PREPARE

1. Raise front or rear wheel. See 2.2 GENERAL, Secure the Motorcycle for Service.

INSPECT

Lateral End Play

NOTE

Lateral end play inspection is the same for both the front and rear wheels.

1. See Figure 3-16. Mount a magnetic base dial indicator on the brake disc.
2. Measure bearing end play.
   a. Set the dial indicator contact point on the end of the axle.
   b. Rotate the wheel clockwise as far as the magnetic base allows.
   c. Hold the wheel in position. Zero the dial indicator.
   d. Rotate the wheel clockwise as far as the magnetic base allows. Note the reading of the dial indicator. Verify the reading.
   e. Compare reading to specifications. See Table 3-9.
   f. Replace as necessary.

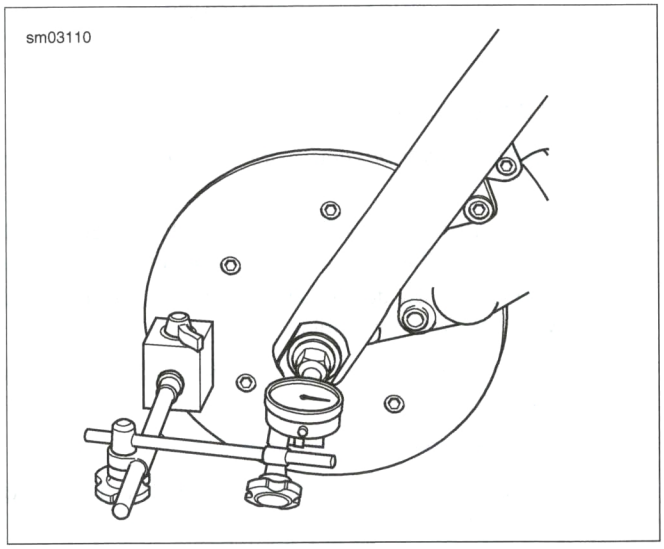

Figure 3-16. Measuring Lateral End Play (Front Wheel) (typical)

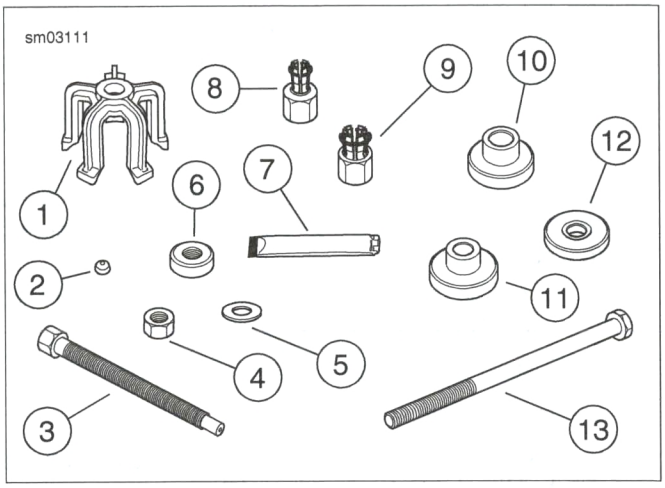

Figure 3-17. HD-44060 Wheel Bearing Tools

Table 3-8. HD-44060 Wheel Bearing Tools

NO.	DESCRIPTION	PART NO.
1	Bridge	HD-44060-5
2	Steel ball	12547
3	Forcing screw	HD-44060-4
4	Nut	10210
5	Washer	12004
6	Bearing	RS25100-200
7	Lubricant	J-23444A
8	Collet, 3/4 in	HD-44060-3
9	Collet, 1.0 in	HD-44060-7
10	Pilot, 1.0 in	HD-44060-8
11	Pilot, 3/4 in	HD-44060-6
12	Support plate	HD-44060-1
13	Threaded rod	280856
Parts 1-7 common to removal/installation.		
Parts 8-9 used for removal only.		
Parts 10-13 used for installation only.		

Table 3-9. Wheel Bearing End Play

DIRECTION	mm	in
Lateral	0.05	0.002

General Inspection

1. Rotate the inner bearing race and check for abnormal noise. Bearing must rotate smoothly.
2. Check wheel bearings and axle spacers for wear and corrosion. Replace as necessary.

REMOVE

PART NUMBER	TOOL NAME
HD-44060C	WHEEL BEARING INSTALLER/REMOVER

1. Remove wheel. See 3.4 FRONT WHEEL or 3.4 FRONT WHEEL.
2. See Figure 3-18. Assemble WHEEL BEARING INSTALLER/REMOVER (Part No. HD-44060C) as required for bearing removal.
   a. Lubricate draw down bolt or a suitable threaded rod with double locking nuts.
   b. Install nut (2), washer (3) and bearing (4) on screw.
   c. Insert assembly through hole in bridge (6).
   d. Install ball bearing inside collet (5). Fasten collet and ball bearing to forcing screw (1).
3. Remove bearings.
   a. Hold end of forcing screw (1) and turn collet (5) to expand edges of collet.
   b. See Figure 3-19. Hold end of forcing screw (1) and turn nut (2) to remove bearing from wheel.
   c. Remove spacer from inside wheel hub.
   d. Repeat on opposite side.
4. Discard all bearings.

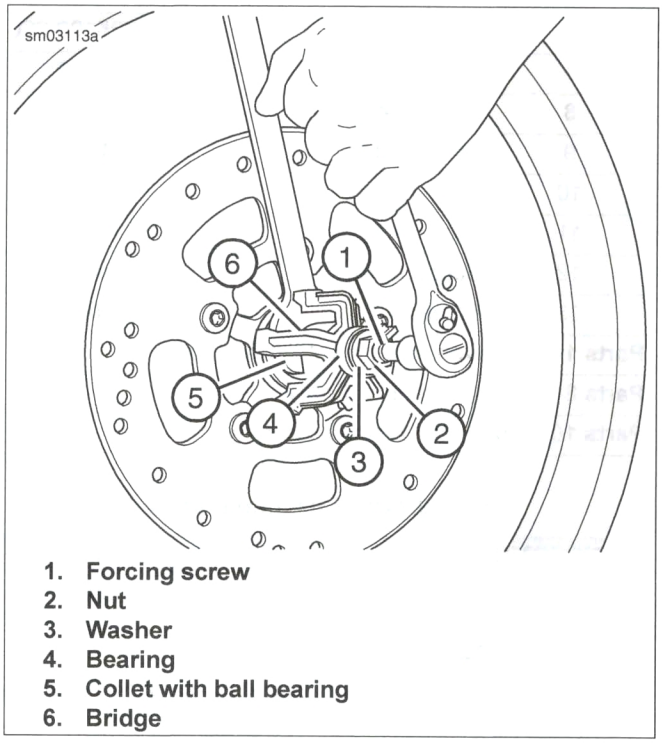

1. **Forcing screw**
2. **Nut**
3. **Washer**
4. **Bearing**
5. **Collet with ball bearing**
6. **Bridge**

Figure 3-18. Gripping Bearing

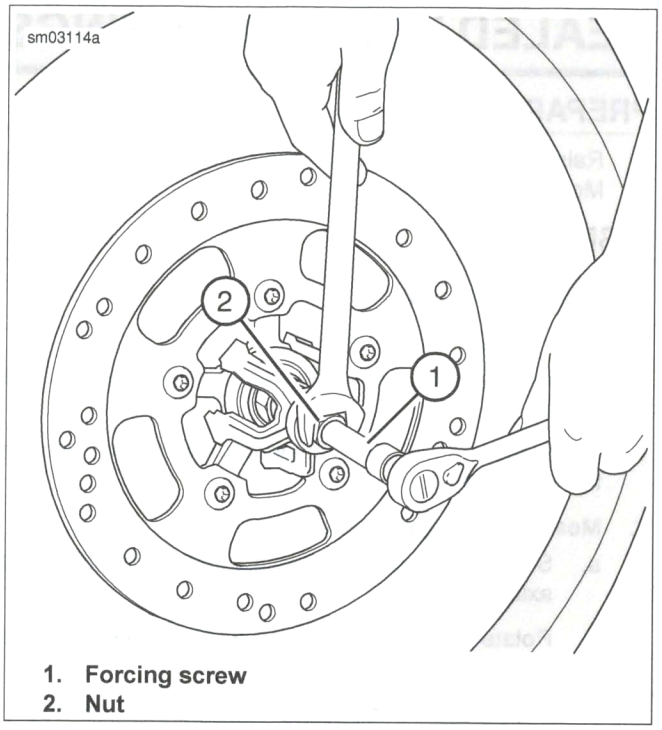

1. **Forcing screw**
2. **Nut**

Figure 3-19. Removing Bearing

INSTALL

PART NUMBER	TOOL NAME
HD-44060C	WHEEL BEARING INSTALLER/REMOVER

NOTES

- ***Front Wheel:*** *Install bearing on the left side first.*
- ***Rear Wheel:*** *Install bearing on the brake disc or right side first.*

1. Assemble WHEEL BEARING INSTALLER/REMOVER (Part No. HD-44060C) as required for bearing installation.
   a. Lubricate draw down bolt or a suitable threaded rod with double locking nuts.
   b. See Figure 3-20. Place threaded rod (1) through support plate (2).
   c. Insert assembly through wheel.
   d. Place **new** bearing on threaded rod (1) with lettered side facing out.
   e. Install pilot (6), bearing (5), washer (4) and nut (3) over rod.

NOTICE

Replace both bearing assemblies even if one assembly appears to be good. Mismatched bearings can lead to excessive wear and premature replacement. (00532c)

2. Install bearings.
   a. Hold hex end of threaded rod (1) and turn nut (3).
   b. Bearing is fully seated when nut can no longer be turned.
   c. Remove tool.
   d. Install spacer sleeve inside wheel hub.
   e. Reverse tool and install opposite side bearing.
3. Install wheel. See 3.4 FRONT WHEEL or 3.5 REAR WHEEL.

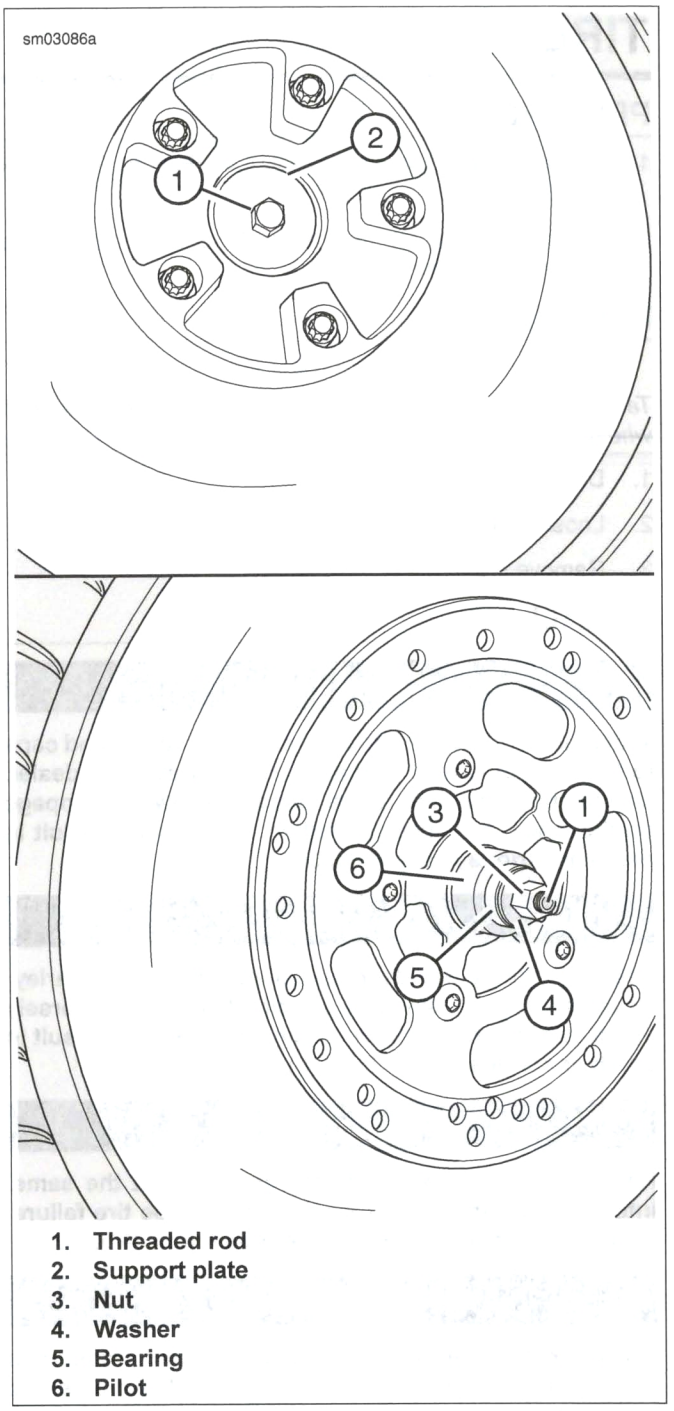

1. **Threaded rod**
2. **Support plate**
3. **Nut**
4. **Washer**
5. **Bearing**
6. **Pilot**

Figure 3-20. Installing Wheel Bearing

COMPLETE

1. Lower wheel.

PREPARE

1. Remove wheel. See 3.4 FRONT WHEEL or 3.5 REAR WHEEL.
2. Check wheels for lateral and radial runout. See 3.7 WHEEL RUNOUT.

REMOVE

NOTE

Take care when replacing tire to prevent cosmetic damage to wheel.

1. Deflate tire.
2. Loosen both tire beads from rim flange.
3. Remove tire.

INSTALL

⚠WARNING

Match tires, tubes, rim strips or seals, air valves and caps to the correct wheel. Contact a Harley-Davidson dealer. Mismatching can lead to tire damage, allow tire slippage on the wheel or cause tire failure, which could result in death or serious injury. (00023c)

⚠WARNING

Use only Harley-Davidson specified tires. See a Harley-Davidson dealer. Using non-specified tires can adversely affect stability, handling or braking, which could result in death or serious injury. (00024b)

⚠WARNING

Harley-Davidson front and rear tires are not the same. Interchanging front and rear tires can cause tire failure, which could result in death or serious injury. (00026a)

⚠WARNING

Do not exceed manufacturer's recommended pressure to seat beads. Exceeding recommended bead seat pressure can cause tire rim assembly to burst, which could result in death or serious injury. (00282a)

⚠WARNING

Be sure tires are properly inflated, balanced, undamaged, and have adequate tread. Inspect your tires regularly and see a Harley-Davidson dealer for replacements. Riding with excessively worn, unbalanced, improperly inflated, overloaded or damaged tires can lead to tire failure and adversely affect stability and handling, which could result in death or serious injury. (00014b)

⚠WARNING

Only install original equipment tire valves and valve caps. A valve, or valve and cap combination, that is too long or too heavy can strike adjacent components and damage the valve, causing rapid tire deflation. Rapid tire deflation can cause loss of vehicle control, which could result in death or serious injury. (00281a)

NOTES

- *Mount tires with arrows molded into the tire sidewall with the arrow pointing in the direction of forward rotation.*
- *If a tire has a colored balance dot on the sidewall, locate the balance dot next to the valve stem.*

1. Install tire.
2. Inflate tire. For tire pressures, see 2.6 INSPECT TIRES.
3. Balance tire.

CLEAN AND INSPECT

General

⚠WARNING

Replace punctured or damaged tires. In some cases, small punctures in the tread area may be repaired from within the removed tire by a Harley-Davidson dealer. Speed should NOT exceed 50 mph (80 km/h) for the first 24 hours after repair, and the repaired tire should NEVER be used over 80 mph (130 km/h). Failure to follow this warning could lead to tire failure and result in death or serious injury. (00015b)

1. Clean the inside of tire.
2. Clean rim as necessary.
3. Inspect the tire for wear and damage.
4. Inspect tread depth. see 2.6 INSPECT TIRES, Replace.
5. Replace as necessary.

Tire Runout

NOTE

Avoid measuring tire runout on raised letters or vents.

1. Check tire pressure. See 2.6 INSPECT TIRES, Replace.
2. Check lateral tire runout.
   a. Mount the wheel and tire in a wheel stand.
   b. See Figure 3-21. Spin the wheel and measure tire lateral runout from a fixed point to a smooth area on the tire sidewall.
   c. Compare reading to specifications. Refer to Table 3-4.
   d. If tire runout exceeds specification, remove tire and check wheel lateral runout. See 3.7 WHEEL RUNOUT. If wheel is within specification, replace tire.

3. Check radial tire runout.
   a. Mount the wheel and tire in a wheel stand.
   b. See Figure 3-22. Spin the wheel and measure tire radial runout at the tread centerline.
   c. Compare reading to specifications. Refer to Table 3-4.
   d. If tire runout exceeds specification, remove tire and check wheel radial runout. See 3.7 WHEEL RUNOUT. If wheel is within specification, replace tire.

Table 3-10. Tire Runout

RUNOUT	mm	in
Lateral	2.29	0.090
Radial	2.29	0.090

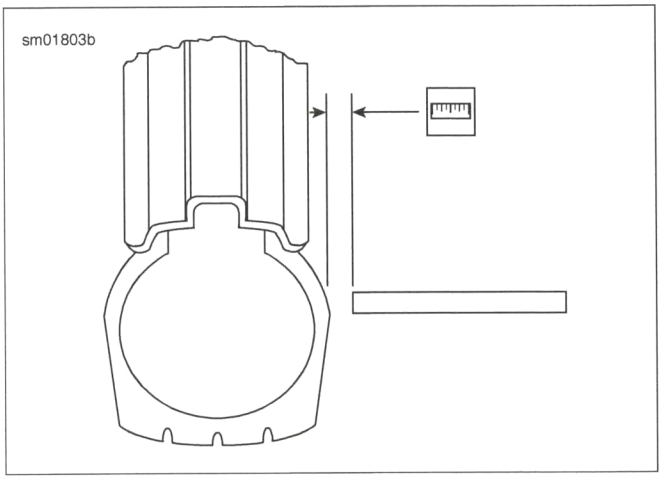

Figure 3-21. Checking Tire Lateral Runout

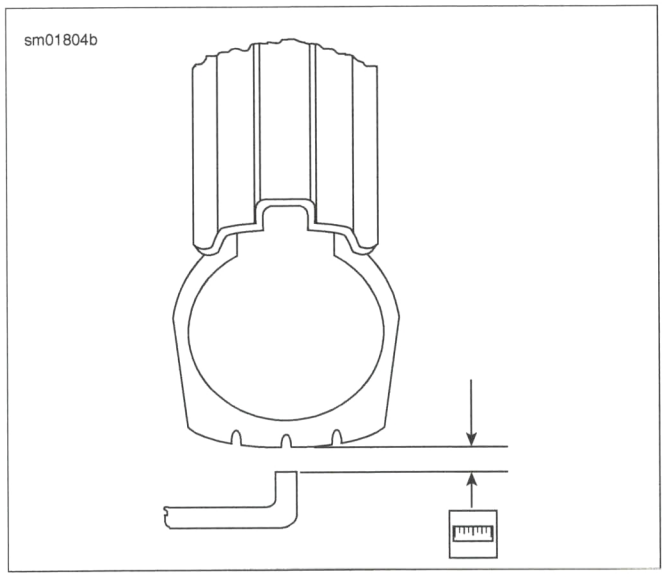

Figure 3-22. Checking Tire Radial Runout

BALANCE

Static vs Dynamic

Wheel balancing is recommended to improve handling. Balancing wheels reduces vibration especially at high speeds. Static balancing will produce satisfactory results for normal highway speeds. Dynamic balancing can produce better results for deceleration.

Weights

The maximum weight permissible to accomplish balance is 99.2 g (3.5 oz) (total weight applied to the rim). If more than 99.2 g (3.5 oz) of weight is required, rotate the tire 180 degrees on the rim and again balance the assembly. Balance wheels to within 14 g (0.5 oz).

All wheel weights currently supplied by Harley-Davidson are made from zinc which is lighter than lead. The weight of each zinc segment is 5 g (0.18 oz) as compared to 7 g (0.25 oz) for lead. Weights are stamped for easy identification.

NOTES

- *If adding more than 43 g (1.5 oz) of weight at one location, divide the amount so that half is applied to each side of rim.*
- *On cast wheels without a flat area near the bead, place the weights crosswise through the opening.*

1. See Figure 3-24. Place weights on a smooth surface of the wheel rim such that centrifugal force will help keep them in place. Make sure the area of application is completely clean, dry, and free of oil and grease.

NOTE

See Figure 3-23. When installing wheel weights, consider cosmetics. Keep snaking (1) within 1.02 mm (0.040 in) (2) of straight. Also keep the angle alignment of individual segments (3) within 3 degrees.

2. Remove paper backing from the weight. Press firmly in place and hold for ten seconds.

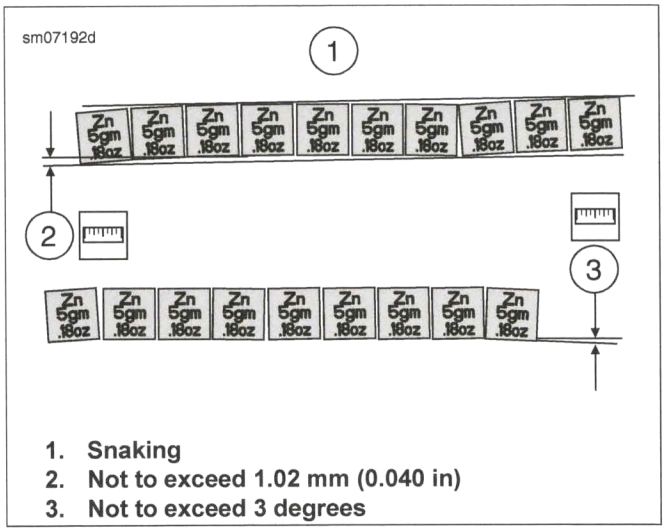

1. **Snaking**
2. **Not to exceed 1.02 mm (0.040 in)**
3. **Not to exceed 3 degrees**

Figure 3-23. Weight Segment Alignment

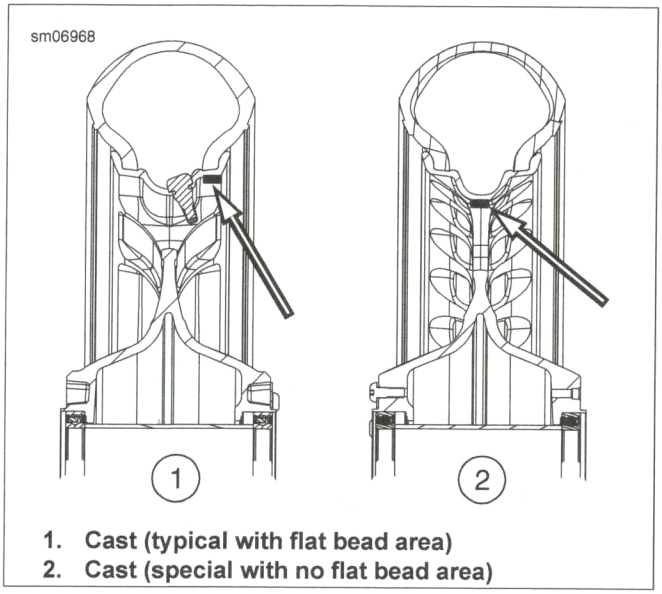

1. Cast (typical with flat bead area)
2. Cast (special with no flat bead area)

Figure 3-24. Wheel Weight Placement

COMPLETE

1. Install wheel. See 3.4 FRONT WHEEL or 3.5 REAR WHEEL.

PREPARE

1. Remove muffler. See 6.17 MUFFLER.

INSPECT

⚠WARNING

Only a Harley-Davidson dealer should perform vehicle alignment. Improper alignment can adversely affect stability and handling, which could result in death or serious injury. (00060a)

⚠WARNING

Check vehicle alignment according to following procedures. Incorrect alignment can adversely affect stability and handling, which could result in death or serious injury. (00287a)

1. See Figure 3-25. Fabricate an alignment tool using a piece of 3.175 mm (0.12 in) diameter aluminum welding rod approximately 558.8 mm (22.0 in) long:
   a. Grind one end to a blunt point (1).
   b. Bend rod at a 90 degree angle (3), 38.1 mm (1.5 in) from the blunt point.
   c. Place a snug-fitting rubber grommet (2) on rod to act as an indicator.
2. Measure distance between rear fork pivot bolt and rear axle alignment plug center:
   a. See Figure 3-26. Place blunt point of alignment tool (1) in the center of the rear fork pivot bolt (2).
   b. Slide rubber grommet (3) along tool shaft until it aligns with hole in center of rear axle (4).
   c. Without moving grommet, position alignment tool on left side of rear fork.
3. Check measurements on both sides of vehicle.
   a. Left and right measurements must be equal within 0.50 mm (0.02 in) on both sides of vehicle.
   b. Adjust if necessary.

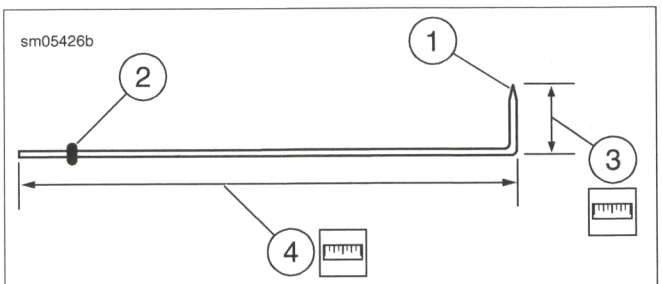

1. **Blunt point**
2. **Rubber grommet**
3. **38.1 mm (1.5 in)**
4. **520.7 mm (19.5 in)**

Figure 3-25. Axle Alignment Tool

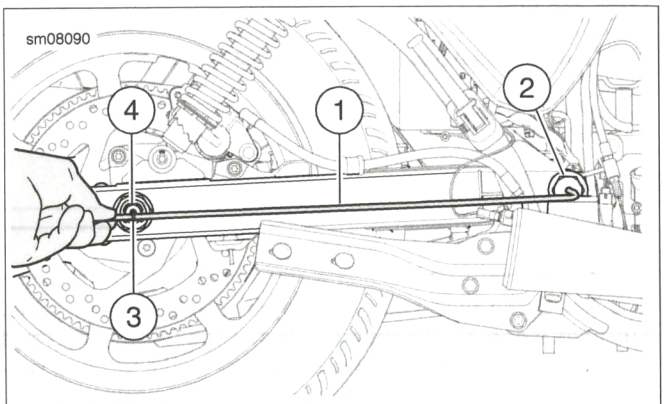

1. **Axle alignment tool**
2. **Rear fork pivot bolt**
3. **Rubber grommet**
4. **Rear axle**

Figure 3-26. Rear Axle Alignment

ADJUST

1. See Figure 3-27. Loosen rear axle nut (1).
2. Adjust rear axle.
   a. Measure the distance from the pivot bolt to axle center on each side.
   b. Turn nut on axle adjuster (2) counterclockwise to shorten distance on the side with the longer distance.
   c. Adjust axle until left and right side alignment measurements are equal.
3. Verify drive belt deflection. See 2.19 INSPECT AND ADJUST DRIVE BELT AND SPROCKETS.
4. Tighten rear axle nut. See 3.5 REAR WHEEL.

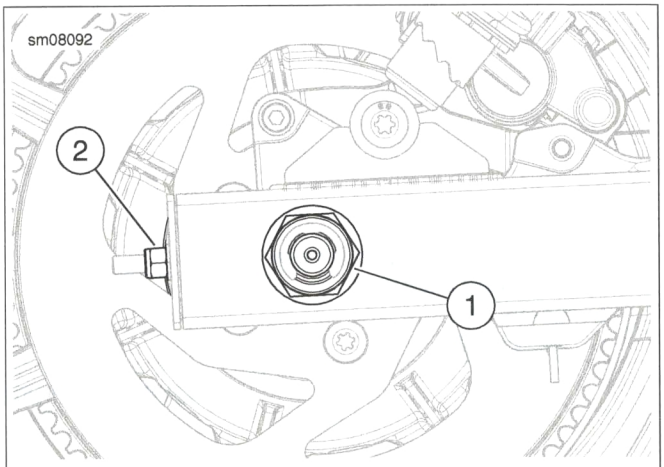

1. **Axle nut**
2. **Axle adjuster nut**

Figure 3-27. Axle Adjuster

COMPLETE

1. Install muffler. See 6.17 MUFFLER.

PREPARE

1. Remove main fuse. See 8.4 POWER DISCONNECT.
2. Drain brake fluid from front brake system. See 3.16 BLEED BRAKES.

REMOVE

NOTICE

D.O.T. 4 brake fluid will damage painted and body panel surfaces it comes in contact with. Always use caution and protect surfaces from spills whenever brake work is performed. Failure to comply can result in cosmetic damage. (00239b)

1. See Figure 3-28. Disconnect brake line from master cylinder.
   a. Remove banjo bolt (6).
   b. Discard washers (4).
   c. Set brake line (5) aside.
2. Remove front brake master cylinder.
   a. Disconnect front brake lamp switch connector (7).
   b. Remove clamp screws (3) and mounting clamp (2).
   c. Remove front brake master cylinder assembly (1) from handlebar (8).

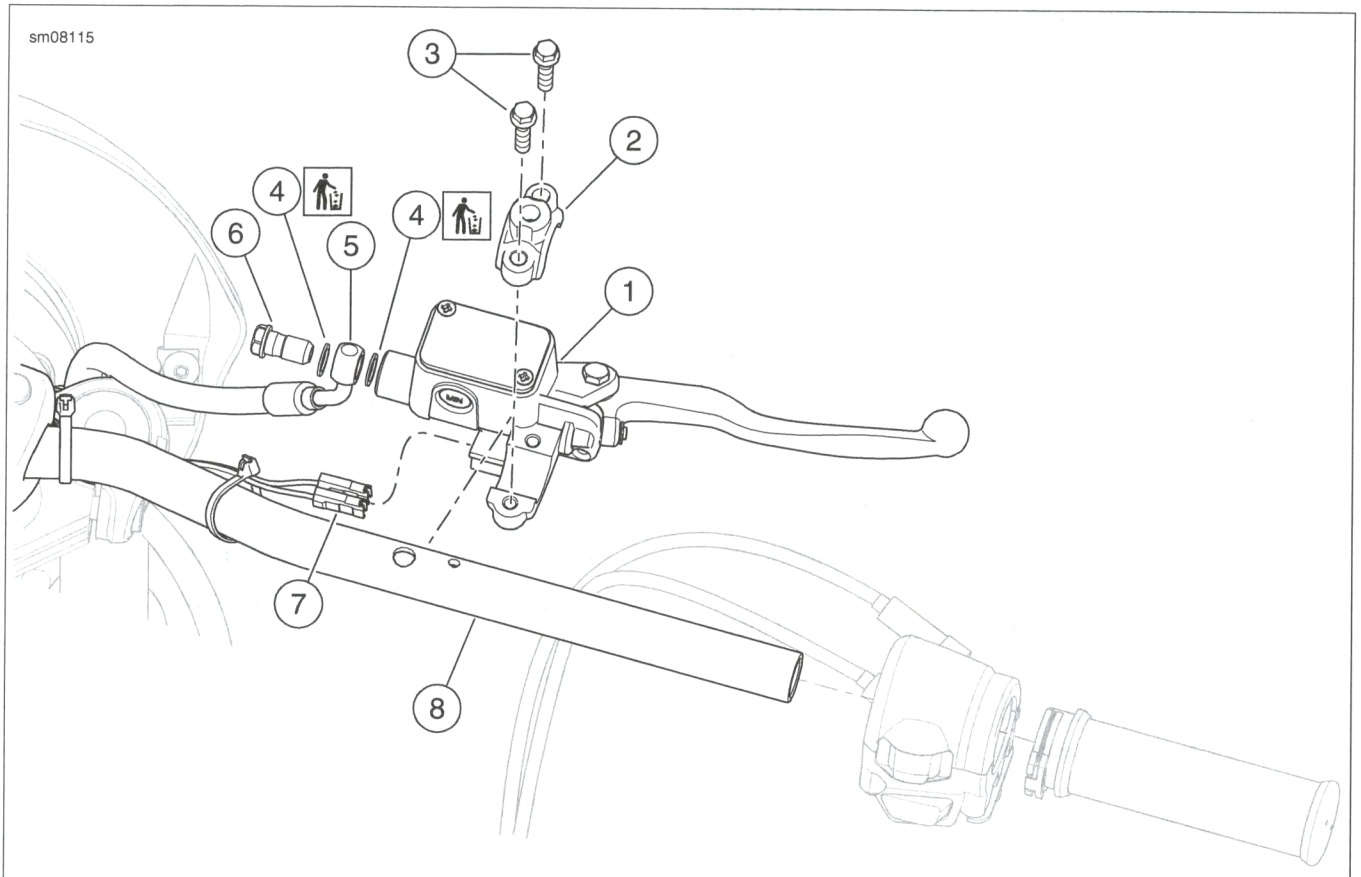

1. **Brake master cylinder assembly**
2. **Mounting clamp**
3. **Screw (2)**
4. **Washer (2)**
5. **Brake line**
6. **Banjo bolt**
7. **Brake lamp switch connector (2)**
8. **Handlebar**

Figure 3-28. Front Brake Master Cylinder

INSTALL

FASTENER	TORQUE VALUE	
Front brake master cylinder clamp screw	9.0-12.0 Nm	80-106 **in-lbs**
Front brake master cylinder banjo bolt	17.0-20.0 Nm	13-14 ft-lbs

1. See Figure 3-28. Install front brake master cylinder.
   a. Align front brake master cylinder assembly (1) to handlebar (8).
   b. Install mounting clamp (2) and clamp screws (3). Tighten to 9.0-12.0 Nm (80-106 **in-lbs**).
   c. Connect front brake lamp switch connector (7).

NOTICE

Avoid leakage. Be sure gaskets, banjo bolt(s), brake line and master cylinder bore are clean and undamaged before assembly. (00322a)

2. Install front brake line.
   a. Install banjo bolt (6), **new** washers (4) and brake line (5) to brake master cylinder. Tighten to 17.0-20.0 Nm (13-14 ft-lbs).

CLEAN AND INSPECT

⚠WARNING

Use denatured alcohol to clean brake system components. Do not use mineral-based solvents (such as gasoline or paint thinner), which will deteriorate rubber parts even after assembly. Deterioration of these components can cause brake failure, which could result in death or serious injury. (00291a)

1. Clean all parts thoroughly.
2. Inspect front brake master cylinder for leaks. Replace as necessary.
3. Inspect front brake lever for wear or damage. Replace as necessary

COMPLETE

1. Fill and bleed brake front brake system. See 3.16 BLEED BRAKES.
2. Install main fuse. See 8.4 POWER DISCONNECT.

PREPARE

1. Drain brake fluid from front brake system. See 3.16 BLEED BRAKES.

REMOVE

NOTICE

D.O.T. 4 brake fluid will damage painted and body panel surfaces it comes in contact with. Always use caution and protect surfaces from spills whenever brake work is performed. Failure to comply can result in cosmetic damage. (00239b)

1. See Figure 3-29. Disconnect brake line from caliper.
   a. Remove banjo bolt (2).
   b. Discard washers (4).
   c. Set brake line (3) aside.
2. Remove front brake caliper.
   a. Remove caliper mounting screws (5) and washers (6).
   b. Remove front brake caliper (1).

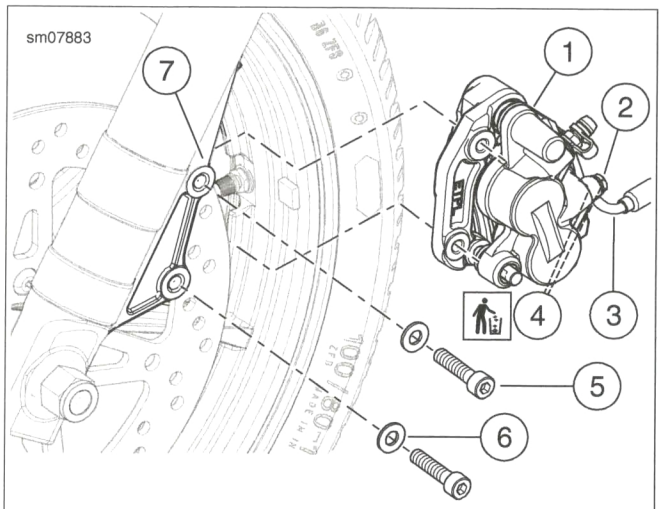

1. **Brake caliper**
2. **Banjo bolt**
3. **Brake line**
4. **Washer (2)**
5. **Caliper mounting screw (2)**
6. **Washer (2)**
7. **Caliper bracket**

Figure 3-29. Front Brake Caliper

INSTALL

FASTENER	TORQUE VALUE	
Front brake caliper mounting screw	20.0-24.0 Nm	15-17 ft-lbs
Front brake caliper banjo bolt	17.0-20.0 Nm	13-14 ft-lbs

1. See Figure 3-29. Install front brake caliper.
   a. Align front brake caliper (1) to caliper bracket (7) as shown.
   b. Install washers (6) and mounting screws (5). Tighten to 20.0-24.0 Nm (15-17 ft-lbs).

NOTICE

Avoid leakage. Be sure gaskets, banjo bolt(s), brake line and master cylinder bore are clean and undamaged before assembly. (00322a)

2. Install front brake line.
   a. Install banjo bolt (2), **new** washers (4) and brake line (3) to brake caliper. Tighten to 17.0-20.0 Nm (13-14 ft-lbs).

CLEAN AND INSPECT

⚠WARNING

Use denatured alcohol to clean brake system components. Do not use mineral-based solvents (such as gasoline or paint thinner), which will deteriorate rubber parts even after assembly. Deterioration of these components can cause brake failure, which could result in death or serious injury. (00291a)

1. Remove front brake pads. See 2.8 INSPECT BRAKES.
2. Clean all parts thoroughly.
3. Inspect and lubricate caliper pins.
   a. Inspect rubber boots for damage. Replace as necessary.
   b. Inspect pins and bushings for wear or corrosion. Replace as necessary.
   c. Lubricate pins and bushings with DOW CORNING MOLY 44 BRAKE PIN GREASE.

COMPLETE

1. Fill and bleed front brake system. See 3.16 BLEED BRAKES.

PREPARE

1. Remove main fuse. See 8.4 POWER DISCONNECT.
2. Remove exhaust system. See 6.18 EXHAUST SYSTEM.
3. Drain brake fluid from rear brake system. See 3.16 BLEED BRAKES.

REMOVE

1. See Figure 3-30. Disconnect brake line from master cylinder.
   a. Disconnect rear brake lamp switch connectors (6).
   b. Remove rear brake lamp switch (5).
   c. Discard washers (4).
   d. Set brake line (7) aside.
2. Remove rear brake master cylinder.
   a. Remove master cylinder mounting screws (3).
   b. Remove master cylinder (1) from pushrod (2).

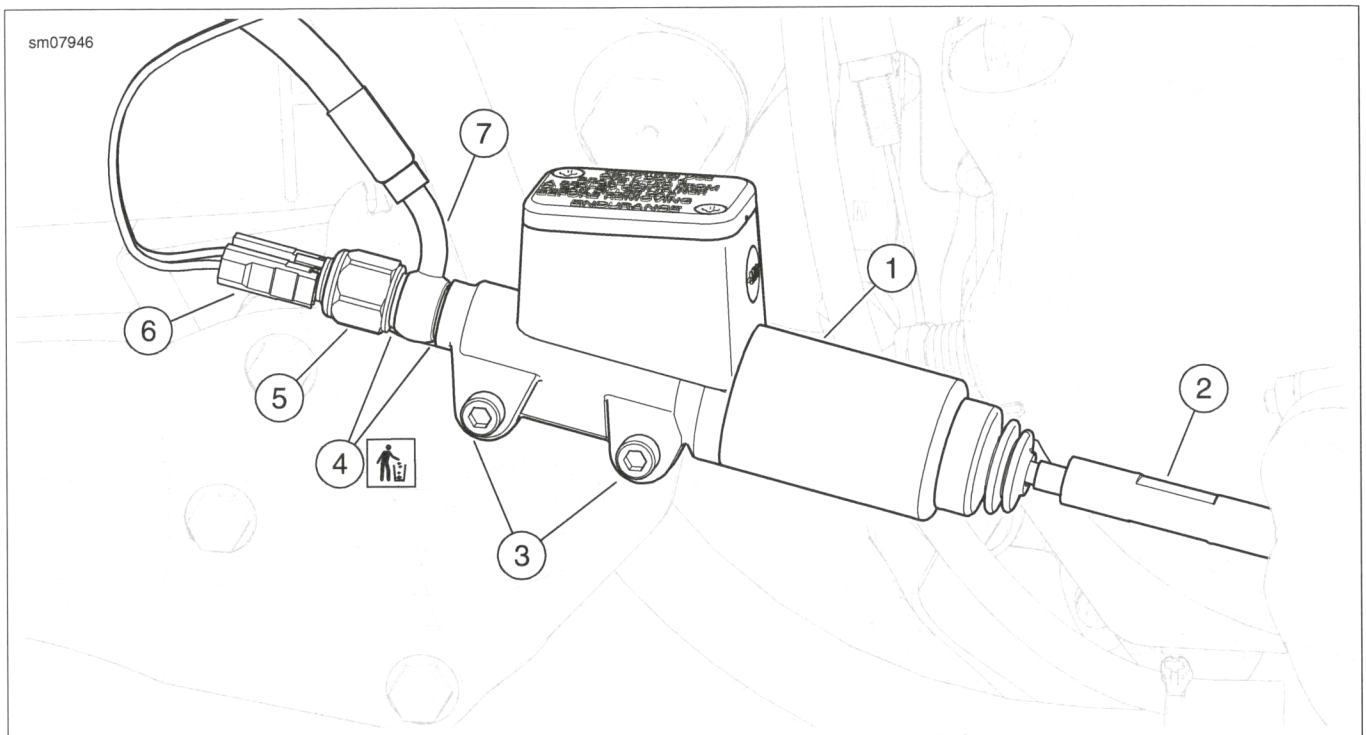

1. **Brake master cylinder assembly**
2. **Pushrod**
3. **Screw (2)**
4. **Washer (2)**
5. **Brake lamp switch**
6. **Brake lamp switch connector (2)**
7. **Brake line**

Figure 3-30. Rear Brake Master Cylinder

INSTALL

FASTENER	TORQUE VALUE	
Rear brake master cylinder mounting screw	9.5-10.5 Nm	84-92 **in-lbs**
Rear brake master cylinder banjo bolt	17.0-20.0 Nm	13-14 ft-lbs

1. See Figure 3-30 Install rear brake master cylinder.
   a. Install master cylinder (1) over pushrod (2)
   b. Align master cylinder to frame.
   c. Install master cylinder mounting screws (3). Tighten to 9.5-10.5 Nm (84-92 **in-lbs**)

NOTICE

Avoid leakage. Be sure gaskets, banjo bolt(s), brake line and master cylinder bore are clean and undamaged before assembly. (00322a)

2. Install rear brake line.
   a. Install rear brake lamp switch (5), **new** washers (4) and brake line (7) to rear brake master cylinder. Tighten to 17.0-20.0 Nm (13-14 ft-lbs).
3. Connect rear brake lamp switch connectors (6).

CLEAN AND INSPECT

⚠WARNING

Use denatured alcohol to clean brake system components. Do not use mineral-based solvents (such as gasoline or paint thinner), which will deteriorate rubber parts even after assembly. Deterioration of these components can cause brake failure, which could result in death or serious injury. (00291a)

1. Clean all parts thoroughly.
2. Inspect rubber boot for damage. Replace as necessary.

COMPLETE

1. Fill and bleed rear brake system. See 3.16 BLEED BRAKES.
2. Install exhaust system. See 6.18 EXHAUST SYSTEM.
3. Install main fuse. See 8.4 POWER DISCONNECT.

PREPARE

1. Drain brake fluid from rear brake system. See 3.16 BLEED BRAKES.

REMOVE

NOTICE

D.O.T. 4 brake fluid will damage painted and body panel surfaces it comes in contact with. Always use caution and protect surfaces from spills whenever brake work is performed. Failure to comply can result in cosmetic damage. (00239b)

1. See Figure 3-31. Disconnect brake line from caliper.
   a. Remove banjo bolt (2).
   b. Discard washers (3).
   c. Set brake line (4) aside.
2. See Figure 3-31. Remove rear brake caliper.
   a. Remove mounting screws (5).
   b. Remove rear brake caliper (1).

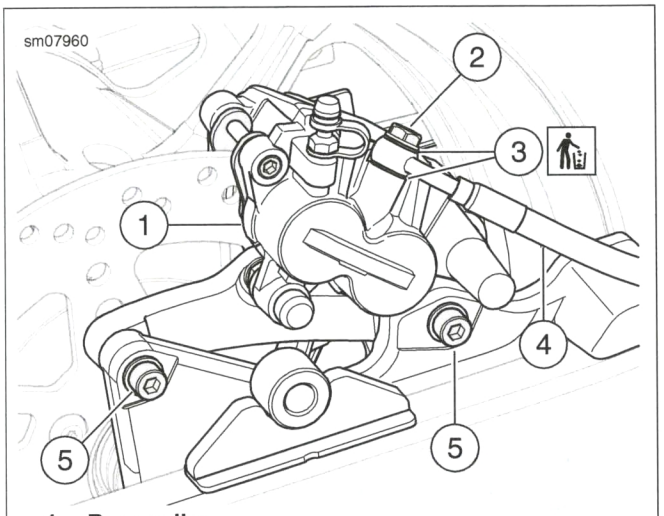

1. **Rear caliper**
2. **Banjo bolt**
3. **Washer (2)**
4. **Brake line**
5. **Caliper mounting screw (2)**

Figure 3-31. Rear Caliper

INSTALL

FASTENER	TORQUE VALUE	
Rear brake caliper mounting screw	20.0-24.0 Nm	15-17 ft-lbs
Rear brake caliper banjo bolt	17.0-20.0 Nm	13-14 ft-lbs

1. See Figure 3-31. Install rear brake caliper.
   a. Align rear caliper (1).
   b. Install caliper mounting screws (5). Tighten to 20.0-24.0 Nm (15-17 ft-lbs).

NOTICE

Avoid leakage. Be sure gaskets, banjo bolt(s), brake line and master cylinder bore are clean and undamaged before assembly. (00322a)

2. Install rear brake line.
   a. Install banjo bolt (2), **new** washers (3) and brake line (4) to brake caliper. Tighten to 17.0-20.0 Nm (13-14 ft-lbs).

CLEAN AND INSPECT

⚠WARNING

Use denatured alcohol to clean brake system components. Do not use mineral-based solvents (such as gasoline or paint thinner), which will deteriorate rubber parts even after assembly. Deterioration of these components can cause brake failure, which could result in death or serious injury. (00291a)

1. Remove rear brake pads. See 2.8 INSPECT BRAKES.
2. Clean all parts thoroughly.
3. Inspect and lubricate caliper pins.
   a. Inspect rubber boots for damage. Replace as necessary.
   b. Inspect pins and bushings for wear or corrosion. Replace as necessary.
   c. Lubricate pins and bushings with DOW CORNING MOLY 44 BRAKE PIN GREASE.

COMPLETE

1. Fill and bleed rear brake system. See 3.16 BLEED BRAKES.

PREPARE

1. Drain front or rear brake system. See 3.16 BLEED BRAKES.

REMOVE

Front Brake Line

NOTICE

D.O.T. 4 brake fluid will damage painted and body panel surfaces it comes in contact with. Always use caution and protect surfaces from spills whenever brake work is performed. Failure to comply can result in cosmetic damage. (00239b)

1. Remove headlamp fairing. See 3.25 HEADLAMP FAIRING.
2. Disconnect front brake line from front brake master cylinder. See 3.11 FRONT BRAKE MASTER CYLINDER.
3. Disconnect front brake line from front brake caliper. See 3.12 FRONT BRAKE CALIPER.
4. See Figure 3-32. Remove front brake line.
   a. Remove screw (4).
   b. Remove front brake line (1).
   c. Remove clamp (3) from front brake line.

Rear Brake Line

NOTICE

D.O.T. 4 brake fluid will damage painted and body panel surfaces it comes in contact with. Always use caution and protect surfaces from spills whenever brake work is performed. Failure to comply can result in cosmetic damage. (00239b)

1. Disconnect rear brake line from rear brake master cylinder. See 3.13 REAR BRAKE MASTER CYLINDER.
2. Disconnect rear brake line from rear brake caliper. See 3.14 REAR BRAKE CALIPER.
3. See Figure 3-33. Remove rear brake line.
   a. Remove screw (1).
   b. Remove rear brake line (2).
   c. Remove clamp (3) from rear brake line.

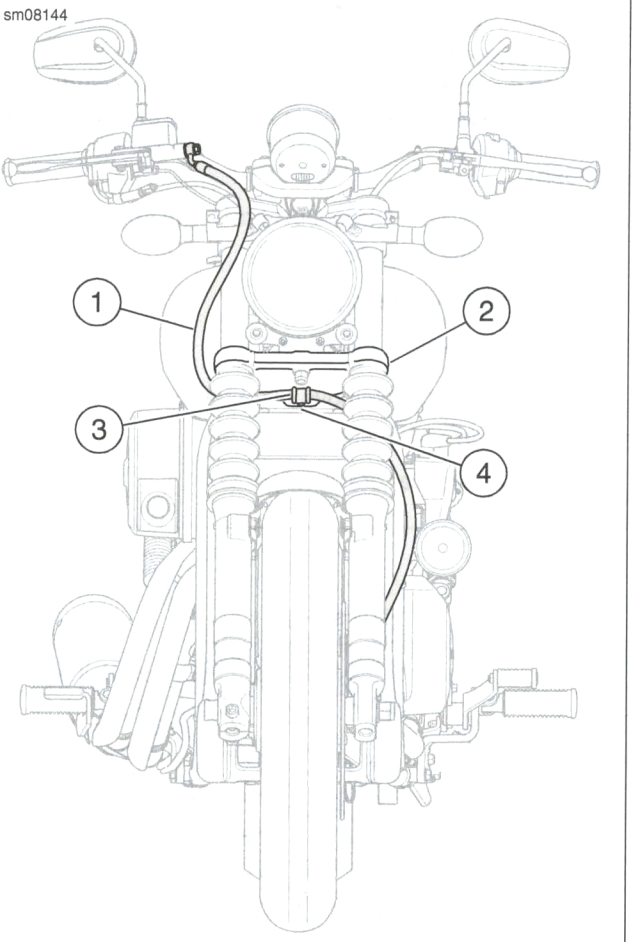

1. **Front brake line**
2. **Lower fork bracket**
3. **Clamp**
4. **Screw**

Figure 3-32. Front Brake Line

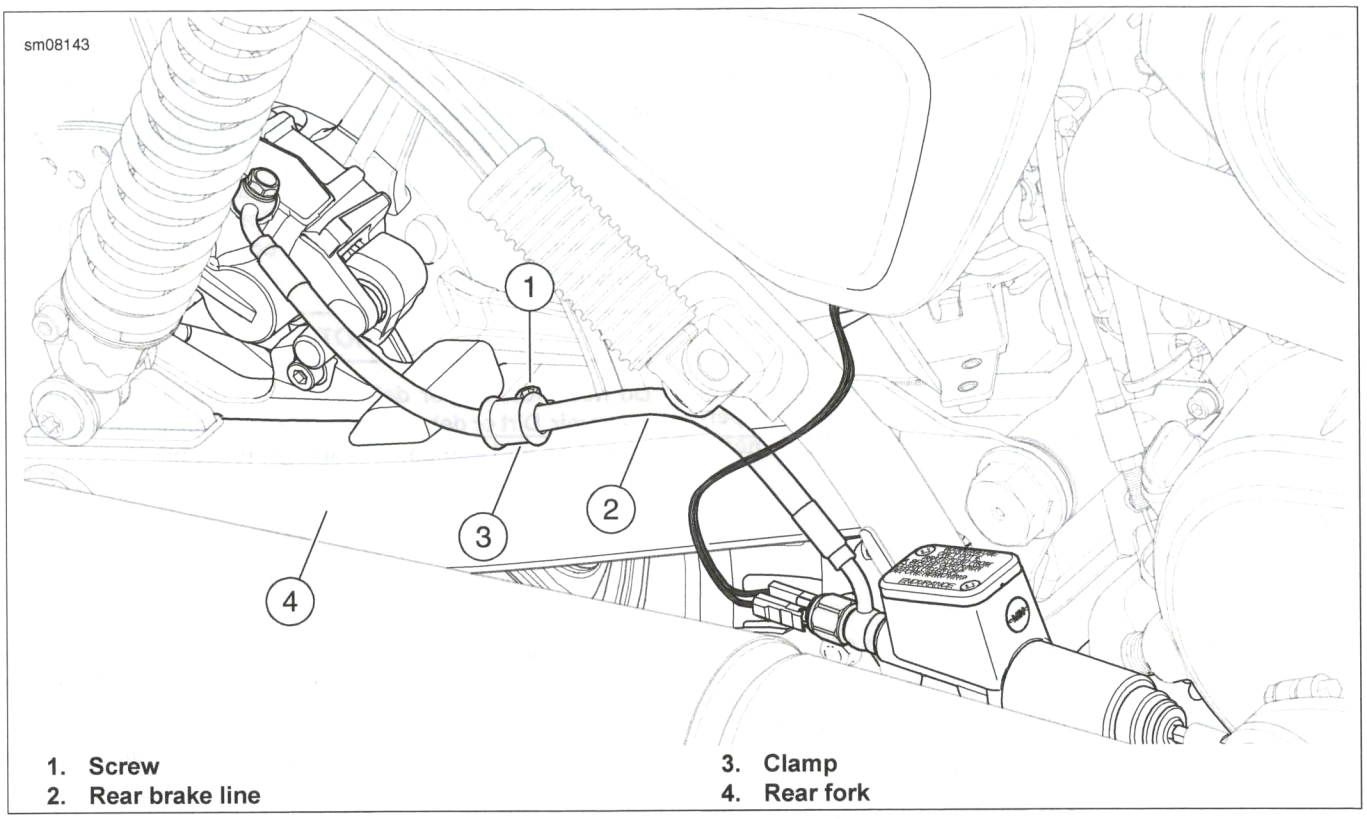

1. **Screw**
2. **Rear brake line**
3. **Clamp**
4. **Rear fork**

Figure 3-33. Rear Brake Line

INSTALL

FASTENER	TORQUE VALUE	
Front brake line clamp screw	7.2-8.8 Nm	64-77 **in-lbs**
Rear brake line clamp screw	7.2-8.8 Nm	64-77 **in-lbs**

NOTICE

Avoid leakage. Be sure gaskets, banjo bolt(s), brake line and master cylinder bore are clean and undamaged before assembly. (00322a)

Front Brake Line

1. Connect front brake line to front brake master cylinder. See 3.11 FRONT BRAKE MASTER CYLINDER.
2. See Figure 3-32. Install front brake line.
   a. Install clamp (3) to front brake line (1). Hand-tighten.
   b. Insert screw (4) through clamp.
   c. Install clamp to lower fork bracket (2). Tighten to 7.2-8.8 Nm (64-77 **in-lbs**).
3. Connect front brake line to front brake caliper. See 3.12 FRONT BRAKE CALIPER.
4. Install headlamp fairing. See 3.25 HEADLAMP FAIRING.

Rear Brake Line

1. Connect rear brake line to rear brake master cylinder. See 3.13 REAR BRAKE MASTER CYLINDER.
2. Connect rear brake line to rear brake caliper. See 3.14 REAR BRAKE CALIPER.
3. See Figure 3-33. Install rear brake line.
   a. Install clamp (3) to rear brake line (2). Hand-tighten.
   b. Insert screw (1) through clamp.
   c. Install clamp to rear fork (4). Tighten to 7.2-8.8 Nm (64-77 **in-lbs**).

CLEAN AND INSPECT

⚠WARNING

Use denatured alcohol to clean brake system components. Do not use mineral-based solvents (such as gasoline or paint thinner), which will deteriorate rubber parts even after assembly. Deterioration of these components can cause brake failure, which could result in death or serious injury. (00291a)

1. Clean all parts thoroughly.
2. Inspect brake lines.
   a. Inspect metal lines for wear. Replace as necessary.
   b. Inspect all fittings for wear. Replace as necessary.
   c. Inspect brake lines for wear or damage. Replace as necessary.

COMPLETE

1. Fill and bleed brake system. See 3.16 BLEED BRAKES.

DRAIN

FASTENER	TORQUE VALUE	
Brake caliper bleeder screw	3.9-6.9 Nm	35-61 **in-lbs**

NOTICE

D.O.T. 4 brake fluid will damage painted and body panel surfaces it comes in contact with. Always use caution and protect surfaces from spills whenever brake work is performed. Failure to comply can result in cosmetic damage. (00239b)

Front Brake System

1. Drain brake fluid.
   a. Remove cap from bleeder screw.
   b. Install end of a length of 7.9 mm (0.31 in) ID clear plastic tubing over bleeder screw.
   c. Place free end of tubing in a suitable container.
   d. Open bleeder screw one-half turn.
   e. Pump brake lever or pedal repeatedly to drain brake fluid.
   f. Close bleeder screw. Tighten to 3.9-6.9 Nm (35-61 **in-lbs**).

Rear Brake System

Procedure for draining brake fluid is the same for both the front and the rear brake systems.

FILL AND BLEED

PART NUMBER	TOOL NAME
SNAP-ON BB200A	BASIC VACUUM BRAKE BLEEDER

FASTENER	TORQUE VALUE	
Brake caliper bleeder screw	3.9-6.9 Nm	35-61 **in-lbs**
Brake master cylinder reservoir cover screw	2.0-4.0 Nm	18-35 **in-lbs**

If a brake system was drained, use BASIC VACUUM BRAKE BLEEDER (Part No. Snap-on BB200A). If a vacuum brake bleeder is not available, use the following procedure.

NOTICE

Do not allow dirt or debris to enter the master cylinder reservoir. Dirt or debris in the reservoir can cause improper operation and equipment damage. (00205c)

Front Brake System

⚠WARNING

A plugged or covered relief port can cause brake drag or lock-up, which could lead to loss of control, resulting in death or serious injury. (00288a)

⚠WARNING

Clean filler cap before removing. Use only D.O.T. 4 brake fluid from a sealed container. Contaminated fluid can adversely affect braking, which could result in death or serious injury. (00504c)

NOTICE

Do not allow dirt or debris to enter the master cylinder reservoir. Dirt or debris in the reservoir can cause improper operation and equipment damage. (00205c)

1. Verify brake system operation.
   a. Verify that the master cylinder is level.
   b. Remove cover from master cylinder reservoir.

   NOTE

   Monitor the fluid level in the master cylinder reservoir. Add fluid before it empties to avoid drawing air into the brake lines.

   c. Fill reservoir with DOT 4 BRAKE FLUID until fluid level reaches max fill level.

   NOTE

   Verify proper operation of the master cylinder relief port by actuating the brake pedal or lever. Fluid will break the fluid surface in the reservoir if internal components are working properly.

   d. Operate the brake lever or pedal to build hydraulic pressure.
2. Bleed front brake system.
   a. Remove bleeder screw cap from caliper.
   b. Install end of clear plastic tubing over bleeder screw.
   c. Place opposite end of clear plastic tubing in a clear container.
   d. Operate the brake lever or pedal to build hydraulic pressure.
   e. Hold pressure with the brake lever or pedal.
   f. Open bleeder screw three-quarters of a turn.
   g. Close bleeder screw as soon as the brake lever or pedal has moved full range of travel.
   h. Allow brake lever or pedal to return slowly to its released position.
   i. Repeat until all air bubbles are purged and a solid column of fluid is observed in the bleeder tube.
   j. Tighten bleeder screw to 3.9-6.9 Nm (35-61 **in-lbs**).
   k. Fill reservoir with DOT 4 brake fluid.
3. Check master cylinder cover gasket bellows.
   a. Verify that the master cylinder cover gasket bellows is not extended or brake fluid will be ejected from the reservoir.

4. Install master cylinder reservoir cover.
   a. Orient the cover with the vent holes facing the rear of the vehicle.
   b. Install cover screws. Tighten to 2.0-4.0 Nm (18-35 **in-lbs**).

⚠WARNING

Be sure that all lights and switches operate properly before operating motorcycle. Low visibility of rider can result in death or serious injury. (00316a)

5. Check operation of brake lamp.

⚠WARNING

After repairing the brake system, test brakes at low speed. If brakes are not operating properly, testing at high speeds can cause loss of control, which could result in death or serious injury. (00289a)

⚠WARNING

After servicing brakes and before moving motorcycle, pump brakes to build brake system pressure. Insufficient pressure can adversely affect brake performance, which could result in death or serious injury. (00279a)

6. Test ride motorcycle. Repeat the bleeding procedure if brakes feel spongy.

Rear Brake System

Procedure for bleeding brakes is the same for both the front and the rear brake systems.

REMOVE

Procedure for removing side covers is the same for both the right and left sides

1. See Figure 3-34. Remove side cover.
   a. Pull side cover (1) away to release posts from grommets (2).

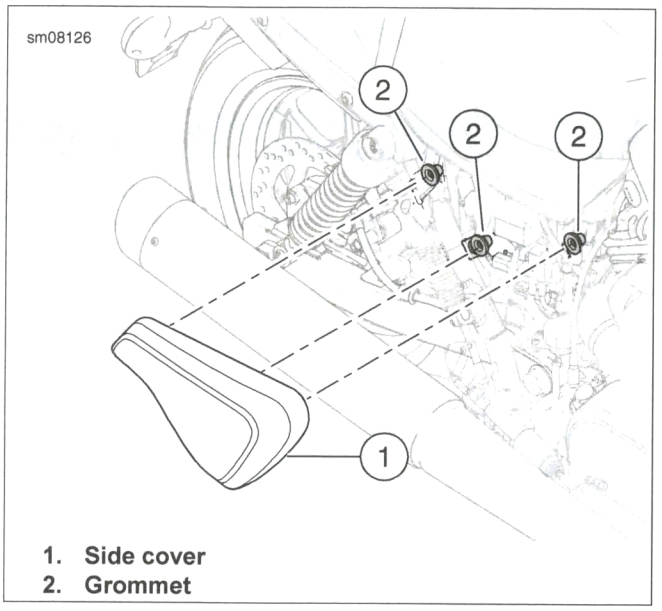

1. Side cover
2. Grommet

Figure 3-34. Right Side Cover

INSTALL

1. See Figure 3-34. Install side cover.
   a. Align side cover (1) posts with grommets (2).
   b. Press side cover until posts are fully seated in grommets.

FORK OIL LEAK CHECK

Fork Oil Seals

The fork oil seal is designed to allow a fine film of oil to lubricate the fork sliding surface.

- The oil film is more visible after continuous high-speed compression and rebound movement.
- Due to greater lubrication needs, larger forks have a greater amount of oil film than smaller forks.

Oil Leak Check

1. Observe oil-ring.
2. Wipe fork clean.
3. Ride motorcycle over bumpy road or complete 5-6 braking events.
4. See Figure 3-35. Check fork slider tube for oil.
   a. If a normal oil/dust film (1, 2) is present, there is no leak.
   b. If an oil run or drip (3) is present, perform procedure two or three more times to confirm oil leak.

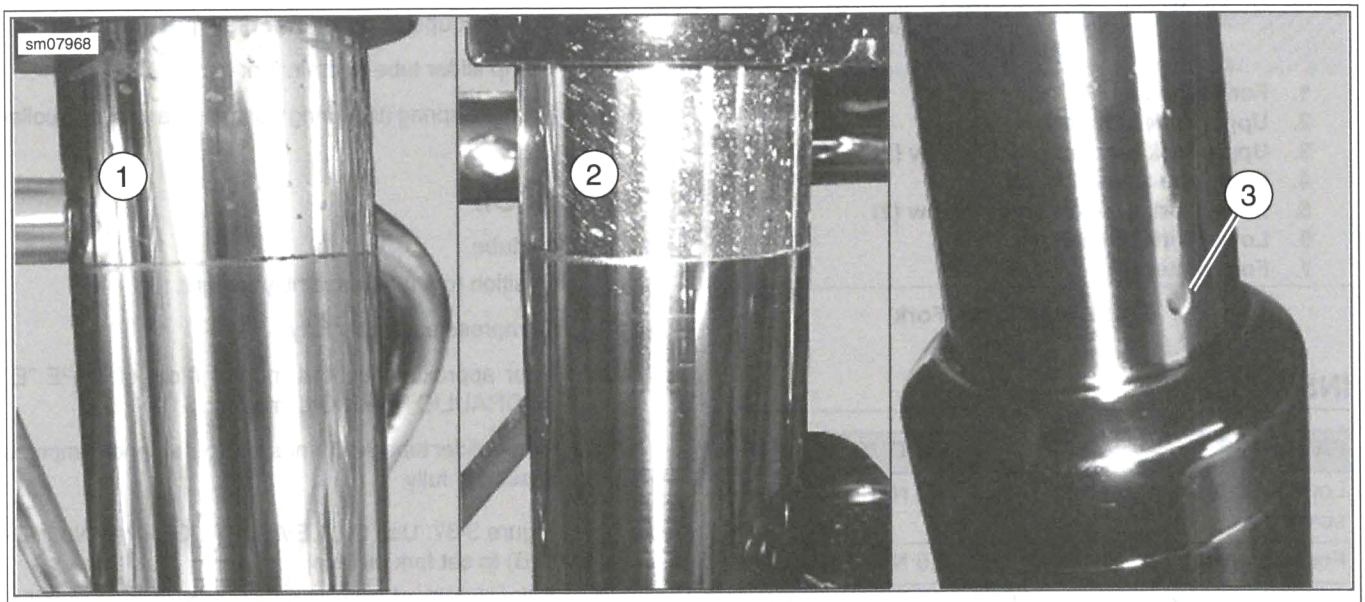

1. **Normal oil/dust film**
2. **Normal oil/dust film**
3. **Drip**

Figure 3-35. Front Forks

PREPARE

1. Remove main fuse. See 8.4 POWER DISCONNECT.
2. Remove front wheel. See 3.4 FRONT WHEEL.
3. Remove front fender. See 3.29 FRONT FENDER.
4. Remove headlamp fairing. See 3.25 HEADLAMP FAIRING.
5. Remove and set aside front brake caliper. See 3.12 FRONT BRAKE CALIPER.
6. Remove front turn signal lamps. See 8.19 FRONT TURN SIGNAL LAMPS.

REMOVE

1. See Figure 3-36. Remove front fork tube assemblies.
   a. Loosen the upper fork bracket pinch screws (3).
   b. Loosen the fork tube caps (1).
   c. Loosen the lower fork bracket pinch screws (5).
   d. Remove fork tube assemblies (4) from fork brackets (2, 6).

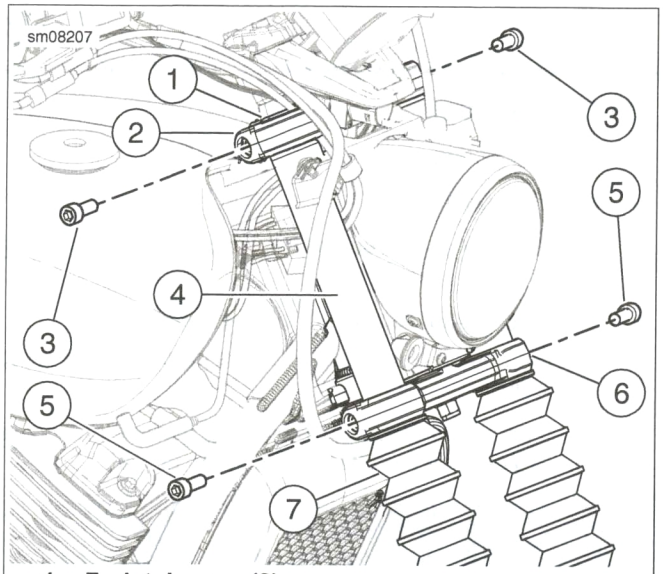

1. **Fork tube cap (2)**
2. **Upper fork bracket**
3. **Upper fork bracket pinch screw (2)**
4. **Fork tube assembly (2)**
5. **Lower fork bracket pinch screw (2)**
6. **Lower fork bracket**
7. **Fork gaiter (2)**

Figure 3-36. Front Fork

INSTALL

FASTENER	TORQUE VALUE	
Lower fork bracket pinch screw	34.3-39.2 Nm	26-28 ft-lbs
Fork tube cap	24.5-28.5 Nm	18-21 ft-lbs
Upper fork bracket pinch screw	50.0-60.0 Nm	37-44 ft-lbs

1. See Figure 3-36. Install front fork tube assemblies.
   a. Insert each fork tube assembly (4) through lower fork bracket (6) and upper fork bracket (2).
   b. Verify top of fork tube is flush with top of upper fork bracket.
   c. Install lower fork bracket pinch screws (5). Tighten to 34.3-39.2 Nm (26-28 ft-lbs).
   d. Tighten fork tube caps (1) to 24.5-28.5 Nm (18-21 ft-lbs).
   e. Install upper fork bracket pinch screws (3). Tighten to 50.0-60.0 Nm (37-44 ft-lbs).
   f. Slide upper end of fork gaiter (7) up until it contacts underside of lower fork bracket.

DRAIN AND FILL FORKS

PART NUMBER	TOOL NAME
HD-59000-B	OIL LEVEL GAUGE

FASTENER	TORQUE VALUE	
Fork tube cap	24.5-28.5 Nm	18-21 ft-lbs

Drain Fork Oil

1. See Figure 3-38. Drain fork tube.
   a. Remove cover (3).
   b. Remove fork tube cap (4) from slider tube (11). Discard O-ring (5).
   c. Turn fork upside down over drain pan.
   d. Pump slider tube to drain fork oil.
   e. Remove spring (8), spring washer (7) and spring collar (6).

Fill Fork Oil

1. Fill fork tube.
   a. Position fork tube assembly upright.
   b. Compress assembly fully.
   c. Pour approximately 414 mL (14 fl oz) of TYPE "E" HYDRAULIC FORK OIL into fork.
   d. Pump slider tube 8-10 times to expel air and compress assembly fully.
2. See Figure 3-37. Use OIL LEVEL GAUGE (Part No. HD-59000-B) to set fork oil level.
   a. Adjust length of draw off tube to fork oil level specification (1). Refer to Table 3-6.
   b. Lock tube (2) to collar (3) with thumb lock (4).
   c. Fit collar to fork tube.
   d. Draw off excess oil.
3. See Figure 3-38. Install spring (8), spring washer (7) and spring collar (6).
4. Install fork tube cap.
   a. Apply HARLEY-DAVIDSON SEAL GREASE to **new** O-ring.
   b. Install **new** O-ring (5) on fork tube cap (4).
   c. Install fork tube cap into slider tube (11). Tighten to 24.5-28.5 Nm (18-21 ft-lbs).
5. Install cover (3).

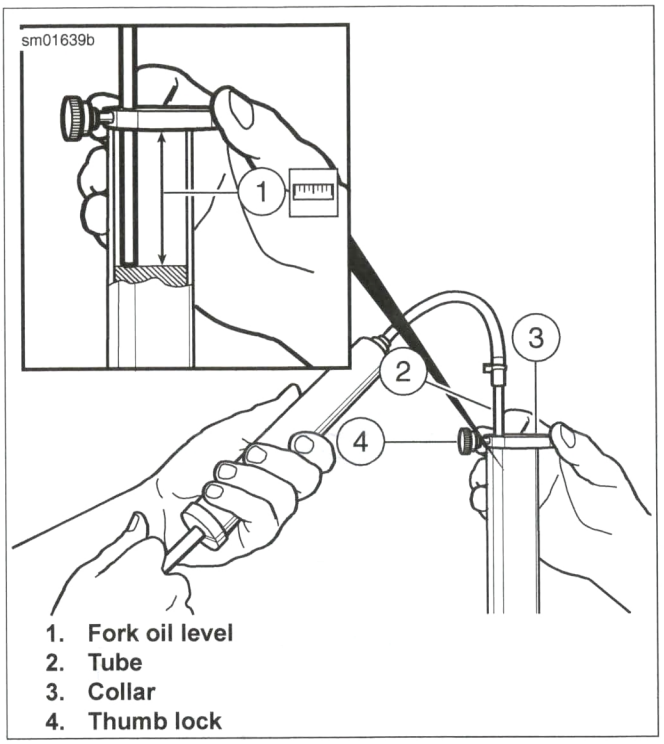

1. **Fork oil level**
2. **Tube**
3. **Collar**
4. **Thumb lock**

Figure 3-37. Oil Level Gauge

DISASSEMBLE

1. Drain front fork tube. See 3.18 FRONT FORK, Drain and Fill Forks.
2. See Figure 3-38. Disassemble fork leg.
   a. Remove fork gaiter (13).
   b. Remove dust seal (14).
   c. Remove internal circle clip (15)
   d. Remove screw (23) from bottom of slider (20).
   e. Withdraw slider tube (11) from slider.
   f. Remove fork seal (16), spacer (17) and upper bushing (18). Discard fork seal.
   g. Insert a small diameter rod through opening in bottom of slider tube to remove damper tube (9).
   h. Remove damper tube and rebound spring (10) from slider.
   i. Remove lower bushing (12) from slider tube.

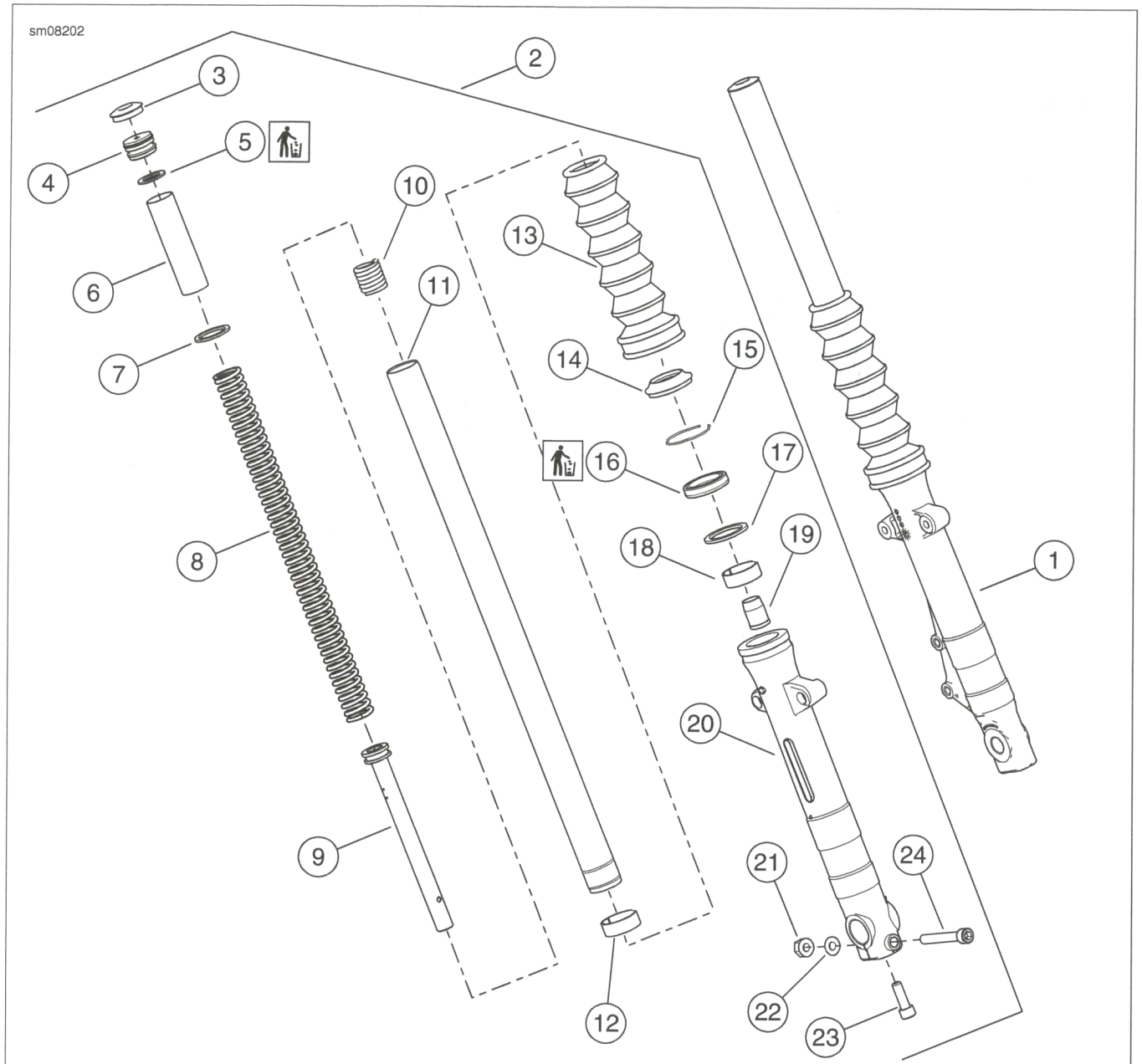

1. Left side fork leg assembly
2. Right side fork leg assembly
3. Cover
4. Fork tube cap
5. O-ring
6. Spring collar
7. Spring washer
8. Spring
9. Damper tube
10. Rebound spring
11. Slider tube
12. Lower bushing
13. Fork gaiter
14. Dust seal
15. Internal circle clip
16. Fork seal
17. Spacer
18. Upper bushing
19. Sleeve
20. Slider
21. Nut
22. Washer
23. Screw
24. Pinch bolt

Figure 3-38. Front Fork Assembly

CLEAN AND INSPECT

1. Clean all parts thoroughly. Verify that slider tube and slider tube bore is clean and dry.
2. Inspect all parts for wear or damage. Replace as necessary.

ASSEMBLE

PART NUMBER	TOOL NAME
HD-51462	FORK SEAL AND BUSHING INSTALLATION TOOL

FASTENER	TORQUE VALUE	
Fork slider tube screw	14.9-24.4 Nm	11-17 ft-lbs

1. See Figure 3-38. Install lower bushing (12) onto slider tube (11).
2. Install rebound spring (10) over damper tube (9).
3. Install damper tube and rebound spring into slider tube.
4. Insert spring (8), tight wound end first into slider tube.
5. Push damper tube through opening at bottom of slider tube using spring.
6. Install slider tube into slider (20). Install screw (23) through bottom of slider. Hand-tighten.
7. Move slider tube through its full range of travel several times to verify proper component alignment.
8. Apply downward force on spring and tighten screw to 14.9-24.4 Nm (11-17 ft-lbs).
9. Remove spring.
10. Install upper bushing (18) over slider tube and into slider.
11. Install spacer (17) over slider tube and into slider.
12. Place FORK SEAL AND BUSHING INSTALLATION TOOL (Part No. HD-51462) over slider tube.
13. Seat upper bushing into slider bore by tapping spacer downward with installation tool.
14. Remove fork seal and bushing installation tool.
15. See Figure 3-39. Coat lips (3) and inner diameter of fork seal with HARLEY-DAVIDSON SEAL GREASE.
16. See Figure 3-38. Install **new** fork seal (15) (lettering side up) over slider tube.
17. Place fork seal and bushing installation tool over slider tube.
18. Seat fork seal into slider bore by tapping oil seal downward with installation tool.
19. Remove fork seal and bushing installation tool.
20. Install internal circle clip (15) into groove in top of slider bore.
21. Install dust seal (14).
22. Install fork gaiter (13).
23. Fill fork tube with oil. See 3.18 FRONT FORK, Drain and Fill Forks.

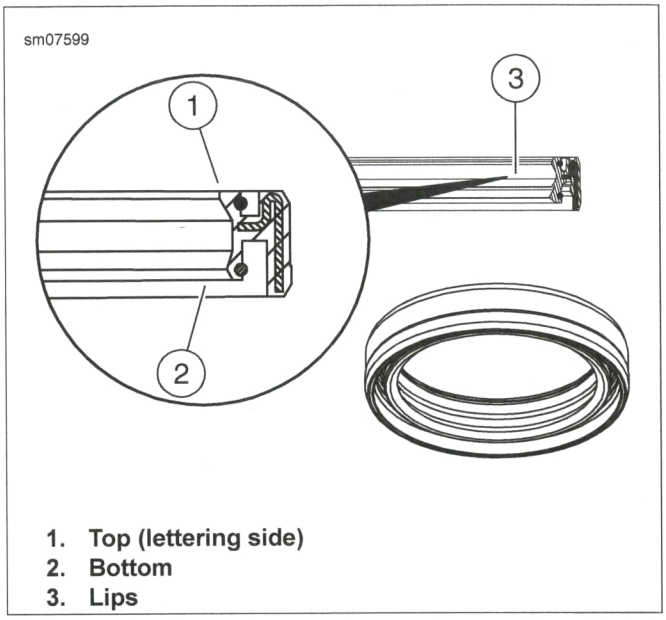

1. **Top (lettering side)**
2. **Bottom**
3. **Lips**

Figure 3-39. Fork Seal

COMPLETE

1. Install front turn signal lamps. See 8.19 FRONT TURN SIGNAL LAMPS.
2. Install front brake caliper. See 3.12 FRONT BRAKE CALIPER.
3. Install headlamp fairing. See 3.25 HEADLAMP FAIRING.
4. Install front fender. See 3.29 FRONT FENDER.
5. Install front wheel. See 3.4 FRONT WHEEL.
6. Install main fuse. See 8.4 POWER DISCONNECT.

STEERING HEAD/FORK STEM AND BRACKET ASSEMBLY 3.19

PREPARE

1. Remove headlamp fairing. See 3.25 HEADLAMP FAIRING.
2. Remove front brake line clamp from lower fork bracket. See 3.15 BRAKE LINES.
3. Remove front fork tubes. See 3.18 FRONT FORK.

REMOVE

1. See Figure 3-40. Remove front fork stem and lower fork bracket assembly.
   a. Support upper fork bracket (2).
   b. Remove fork stem pinch screw (9).
   c. Remove fork stem screw (4) and washer (3).
   d. Remove fork stem and lower fork bracket assembly (1) from steering head (7).
2. Remove lower steering head bearing (6) from fork stem and lower fork bracket assembly.
3. Remove upper steering head bearing.
4. Discard dust seals (5).

INSTALL

FASTENER	TORQUE VALUE	
Fork stem screw, first torque	22.6 Nm	200**in-lbs**
Fork stem screw, second torque	8.5 Nm	75**in-lbs**
Fork stem pinch screw	50.0-60.0 Nm	37-44 ft-lbs

⚠WARNING

Properly seat bearing cups in steering head bore. Improper seating can loosen fork stem bearings adversely affecting stability and handling, which could result in death or serious injury. (00302a)

⚠WARNING

Properly adjust fork stem bearings. Improper adjustments can adversely affect stability and handling, which could result in death or serious injury. (00301c)

1. See Figure 3-40. Install front fork stem and fork bracket assembly.
   a. Install **new** dust seal (5) and lower steering head bearing (6) over fork stem and lower fork bracket assembly (1).
   b. Install fork stem through steering head (7).
   c. Install upper steering head bearing and **new** dust seal.
   d. Align upper fork bracket (2) with fork stem.
   e. Install washer (3) and fork stem screw (4). Tighten fork stem screw to 22.6 Nm (200**in-lbs**).
   f. Loosen fork stem screw 90 degrees. Tighten to 8.5 Nm (75**in-lbs**).
   g. Tighten fork stem pinch screw to 50.0-60.0 Nm (37-44 ft-lbs).

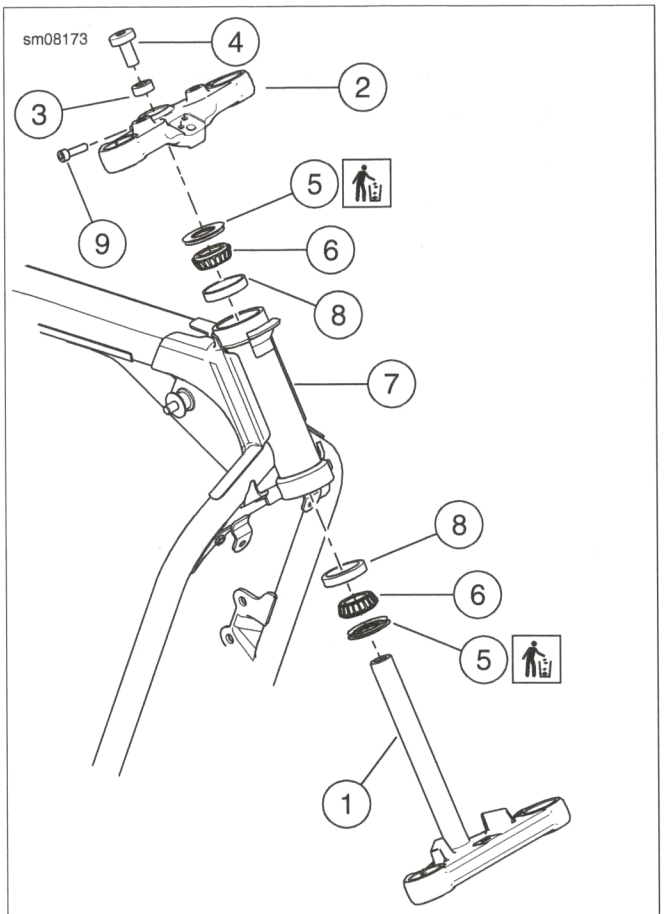

1. **Fork stem and lower fork bracket assembly**
2. **Upper fork bracket**
3. **Washer**
4. **Fork stem screw**
5. **Dust seal (2)**
6. **Steering head bearing (2)**
7. **Steering head**
8. **Bearing cup (2)**
9. **Fork stem pinch screw**

Figure 3-40. Fork Stem and Bracket Assembly

CLEAN AND INSPECT

PART NUMBER	TOOL NAME
HD-33416	UNIVERSAL DRIVER HANDLE
HD-39301-A	STEERING HEAD BEARING RACE REMOVAL TOOL

1. Clean all parts.
2. Inspect fork stem and upper and lower brackets. Replace as necessary.

NOTICE

Replace both bearing assemblies even if one assembly appears to be good. Mismatched bearings can lead to excessive wear and premature replacement. (00532c)

3. Inspect bearings for the conditions below. Replace as necessary.

- Pitting
- Wear
- Scoring

4. Inspect bearing cups. Replace as necessary
   a. Drive bearing cups from steering head using STEERING HEAD BEARING RACE REMOVAL TOOL (Part No. HD-39301-A) and UNIVERSAL DRIVER HANDLE (Part No. HD-33416).
   b. Install **new** steering head bearing cups.

COMPLETE

1. Install front fork tubes. See 3.18 FRONT FORK.
2. Install front brake line clamp to lower fork bracket. See 3.15 BRAKE LINES.
3. Check front fork fall away. See 2.14 ADJUST STEERING HEAD BEARINGS.
4. Install headlamp fairing. See 3.25 HEADLAMP FAIRING.

PREPARE

1. Remove muffler. See 6.17 MUFFLER.
2. Remove muffler bracket. See 6.18 EXHAUST SYSTEM.
3. Remove rear brake line clamp from rear fork. See 3.15 BRAKE LINES.
4. Remove rear wheel. See 3.5 REAR WHEEL.
5. Remove shock absorbers. See 3.22 SHOCK ABSORBERS.

REMOVE

1. See Figure 3-41. Support rear fork (4).
2. Remove rear fork.
   a. Remove nut (1) and washer (2).
   b. Remove pivot shaft (3).
   c. Remove rear fork (4) and spacer (5).

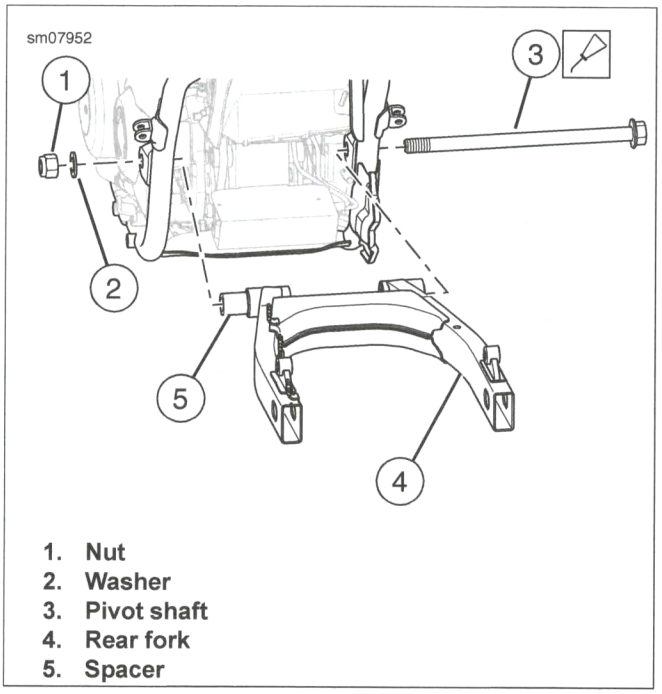

1. **Nut**
2. **Washer**
3. **Pivot shaft**
4. **Rear fork**
5. **Spacer**

Figure 3-41. Rear Fork

INSTALL

FASTENER	TORQUE VALUE	
Rear fork pivot shaft nut	110.0-120.0 Nm	82-88 ft-lbs

1. See Figure 3-41. Support rear fork (4) in position.
2. Install rear fork.
   a. Apply ANTI-SEIZE LUBRICANT to pivot shaft (3).
   b. Install pivot shaft (3) and spacer (5).
   c. Install washer (2) and nut (1). Tighten to 110.0-120.0 Nm (82-88 ft-lbs).

DISASSEMBLE

1. See Figure 3-42. Remove right side assembly.
   a. Discard seals (1).
   b. Remove spacer (3).
   c. If necessary, remove bushing (2) using a suitable press.
2. See Figure 3-43. Remove left side assembly.
   a. Discard seals (1).
   b. Remove spacers (2, 5).
   c. Discard retaining ring (4).
   d. If necessary, remove bearing (3) using a suitable press.

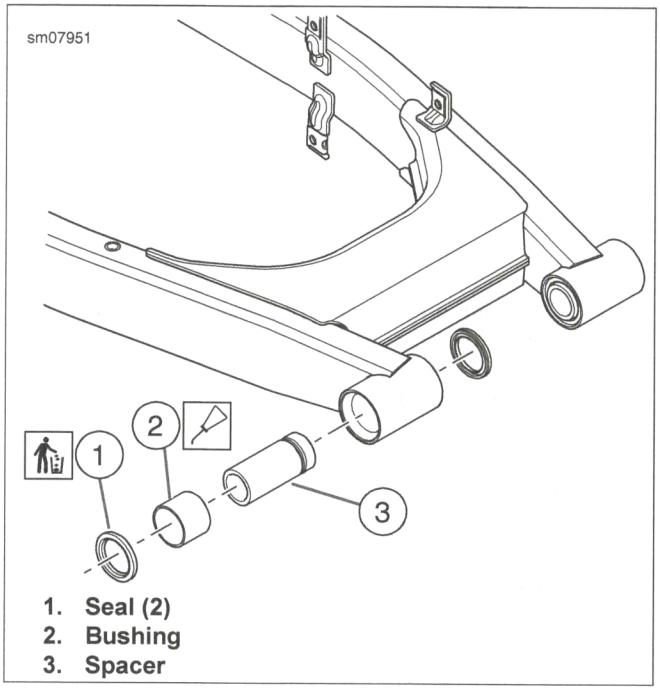

1. **Seal (2)**
2. **Bushing**
3. **Spacer**

Figure 3-42. Right Side Rear Fork Assembly

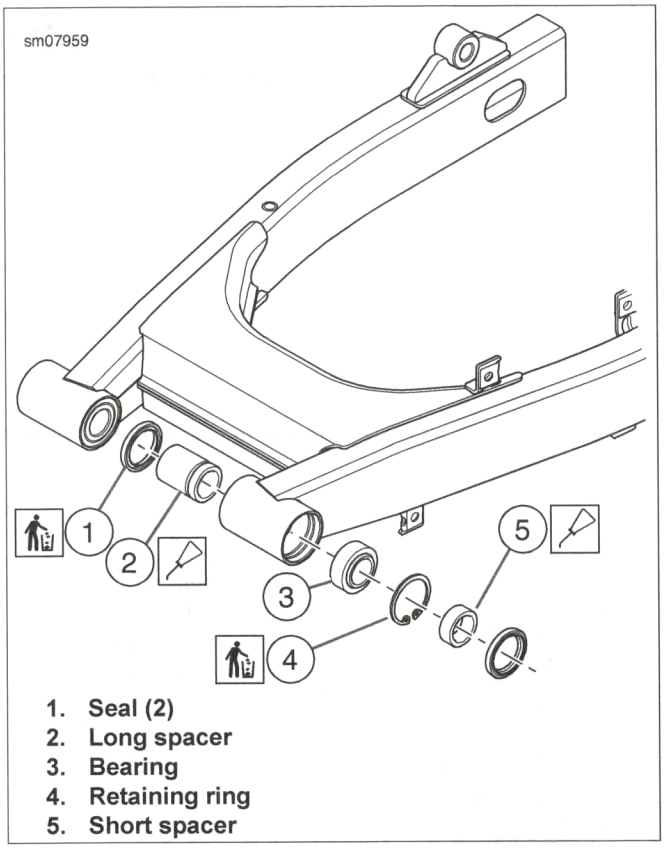

1. **Seal (2)**
2. **Long spacer**
3. **Bearing**
4. **Retaining ring**
5. **Short spacer**

Figure 3-43. Left Side Rear Fork Assembly

CLEAN AND INSPECT

1. Clean all components.
2. Carefully inspect bearings for wear and/or corrosion. Replace as necessary.
3. Verify that the bearing retaining rings are not bent or damaged. Replace as necessary.
4. Check that rear fork is not bent, twisted or cracked. Replace as necessary.

ASSEMBLE

1. See Figure 3-42. Install right side assembly.
   a. If removed, install bushing (2) using a suitable press.
   b. Apply ANTI-SEIZE LUBRICANT to inner and outer surface of spacer (3).

   NOTE

   Spacer (3) has three machined grooves on one end.

   c. Install spacer (3).
   d. Install **new** seals (1).
2. See Figure 3-43. Install left side assembly.
   a. If removed, install bearing (3) using a suitable press.
   b. Install **new** retaining ring (4).

   NOTES

   Long spacer (2) has two machined grooves on one end.

   Short spacer (5) has one machined grooves on one end.

   c. Apply ANTI-SEIZE LUBRICANT to inner and outer surfaces of spacers (2, 5).
   d. Install spacers (2, 5).
   e. Install **new** seals (1).

COMPLETE

1. Install shock absorbers. See 3.22 SHOCK ABSORBERS.
2. Install rear wheel. See 3.5 REAR WHEEL.
3. Attach rear brake line clamp from rear fork. See 3.15 BRAKE LINES.
4. Install muffler bracket. See 6.18 EXHAUST SYSTEM.
5. Install muffler. See 6.17 MUFFLER.

REMOVE

1. See Figure 3-44. Remove front belt guard.
   a. Remove screws (1).
   b. Remove front belt guard (2).
2. Remove screw (4) and bracket (3), if needed.
3. Disconnect negative battery cable. See 8.4 POWER DISCONNECT.
4. See Figure 3-45. Remove upper belt guard.
   a. Remove upper belt guard screws (2).
   b. Remove upper belt guard (1).
5. Remove lower belt guard.
   a. Remove lower belt guard screws (3).
   b. Remove lower belt guard (4).

INSTALL

FASTENER	TORQUE VALUE	
Lower belt guard screw	2.3-3.3 Nm	21-29 **in-lbs**
Upper belt guard screw	2.3-3.3 Nm	21-29 **in-lbs**
Front belt guard bracket to engine screw	10.0-12.0 Nm	89-106 **in-lbs**
Front belt guard screw	9.0-11.0 Nm	80-97 **in-lbs**

1. See Figure 3-45. Install lower belt guard.
   a. Install lower belt guard (4).
   b. Install lower belt guard screws (3). Tighten to 2.3-3.3 Nm (21-29 **in-lbs**).
2. Install upper belt guard.
   a. Install upper belt guard (1).
   b. Install upper belt guard screws (2). Tighten to 2.3-3.3 Nm (21-29 **in-lbs**).
3. Connect negative battery cable. See 8.4 POWER DISCONNECT.
4. See Figure 3-44. Install front belt guard.
5. Install bracket, if removed.
   a. Position bracket (3).
   b. Install screw (4). Tighten to 10.0-12.0 Nm (89-106 **in-lbs**).
6. Install front belt guard (2).
   a. Install screws (1). Tighten to 9.0-11.0 Nm (80-97 **in-lbs**).

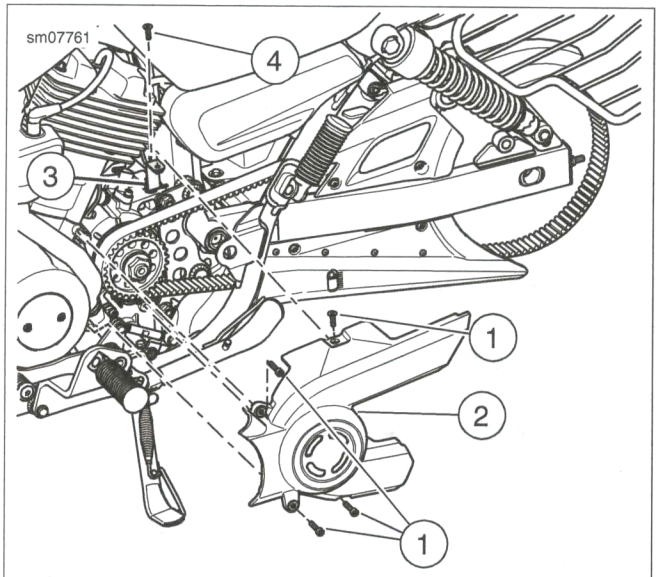

1. **Screw (4)**
2. **Front belt guard**
3. **Bracket**
4. **Screw**

Figure 3-44. Front Belt Guard

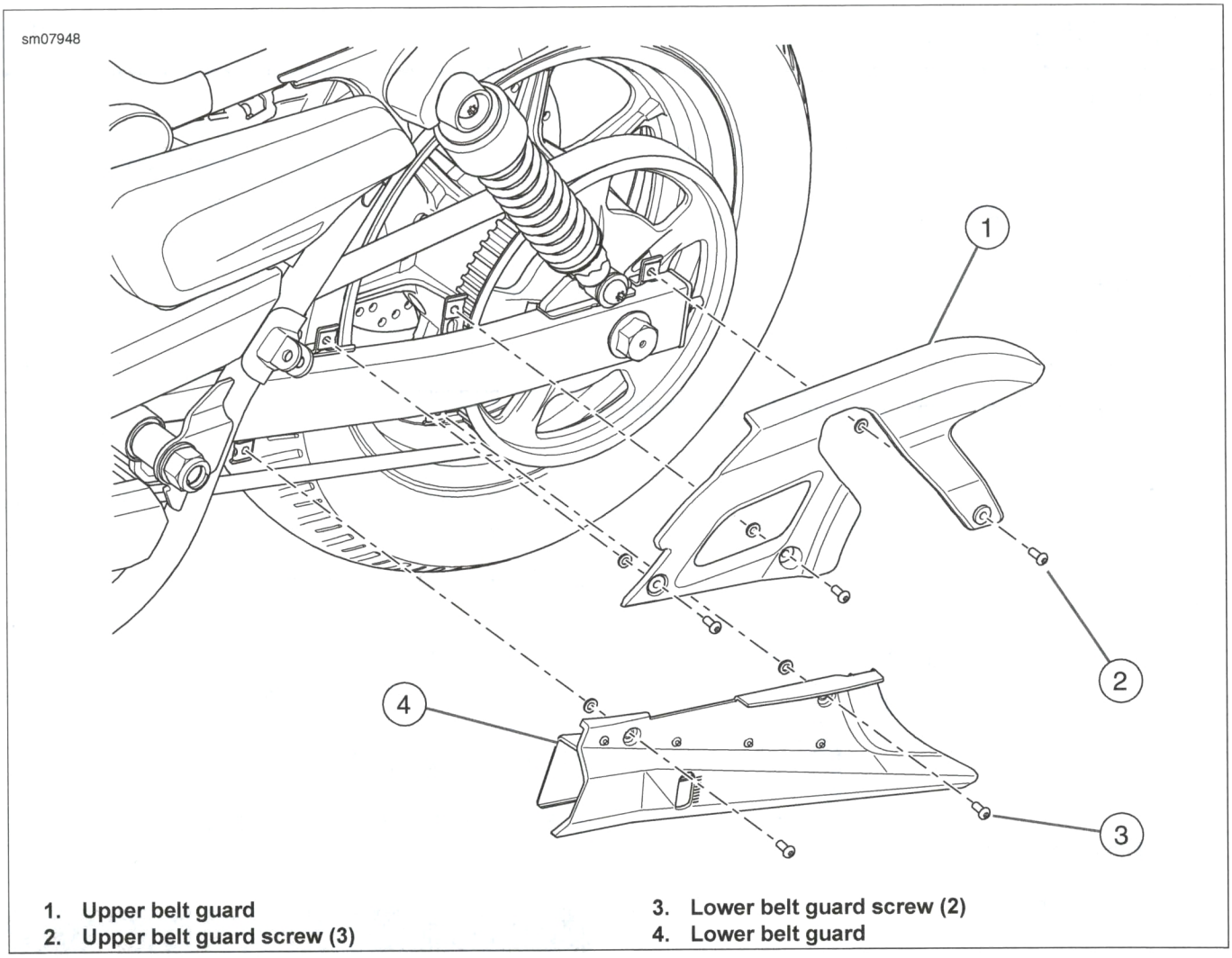

1. Upper belt guard
2. Upper belt guard screw (3)
3. Lower belt guard screw (2)
4. Lower belt guard

Figure 3-45. Upper and Lower Belt Guards

PREPARE

1. Raise rear wheel. See 2.2 GENERAL, Secure the Motorcycle for Service.
2. **Right Shock Absorber:** Remove muffler. See 6.17 MUFFLER.

REMOVE

1. See Figure 3-46. Remove shock absorber.
   a. Remove lower screw (4).
   b. Remove upper screw (3), cover (2) and shock absorber (1).

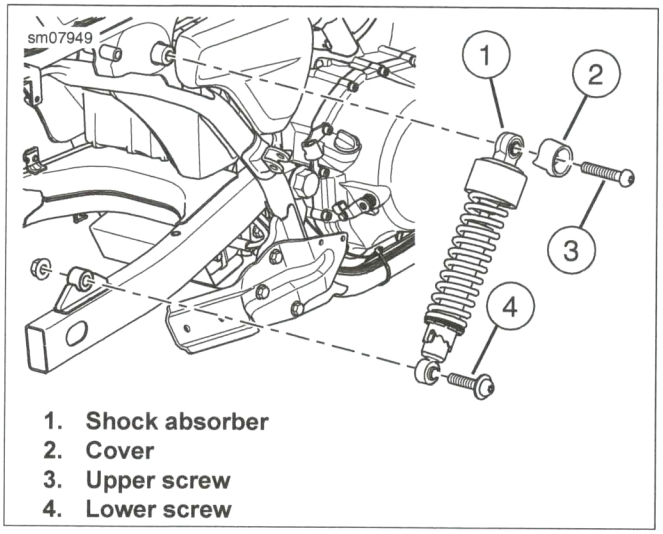

1. **Shock absorber**
2. **Cover**
3. **Upper screw**
4. **Lower screw**

Figure 3-46. Shock Absorber

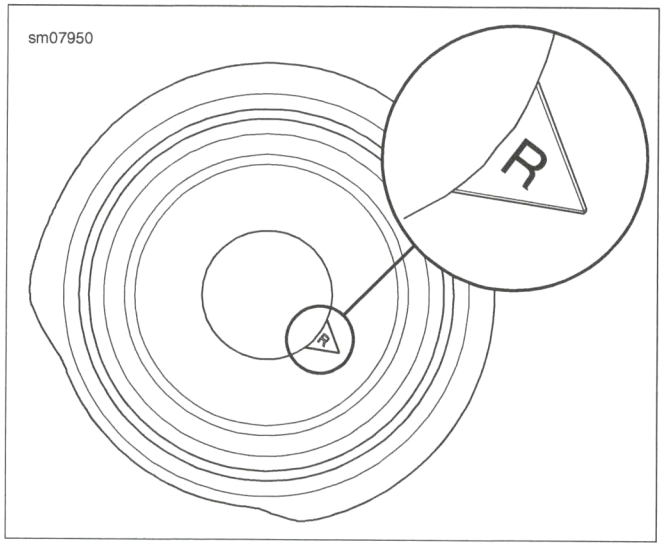

Figure 3-47. Cover

INSTALL

FASTENER	TORQUE VALUE	
Shock absorber lower screw	61.0-68.0 Nm	45-50 ft-lbs
Shock absorber upper screw	61.0-68.0 Nm	45-50 ft-lbs

1. See Figure 3-46. Install shock absorber.
   a. Install shock absorber (1).
   b. Install lower screw (4). Tighten to 61.0-68.0 Nm (45-50 ft-lbs).
   c. See Figure 3-47. Install cover with triangle facing forward.
   d. See Figure 3-46. Install upper screw (3). Tighten to 61.0-68.0 Nm (45-50 ft-lbs).

CLEAN AND INSPECT

1. Inspect shock absorber for signs of leakage. Replace both shock absorbers if leak is found.
2. Inspect bushings for cracks and wear. Replace as necessary.

ADJUST PRELOAD

PART NUMBER	TOOL NAME
HD-51439	SHOCK ADJUSTMENT SPANNER

⚠WARNING

Adjust both shock absorbers equally. Improper adjustment can adversely affect stability and handling, which could result in death or serious injury. (00036b)

NOTICE

Do not turn the shock absorber adjustment collar clockwise beyond adjustment setting 5. Doing so may result in equipment damage. (00166b)

NOTE

See Figure 3-48. Do not turn the preload cam past position five (5) to position one (1) or from position one (1) to position five (5).

1. See Figure 3-49. Adjust rear shocks.
   a. Refer to Table 3-11.
   b. Using SHOCK ADJUSTMENT SPANNER (Part No. HD-51439), turn the adjustment cam to specification.

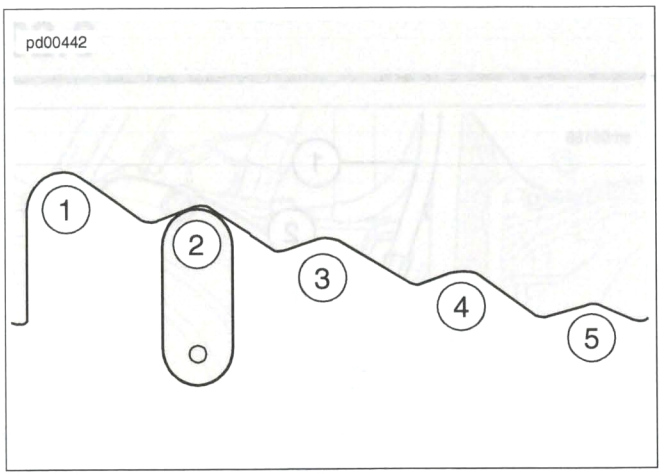

Figure 3-48. Shock Preload Cam Positions (typical)

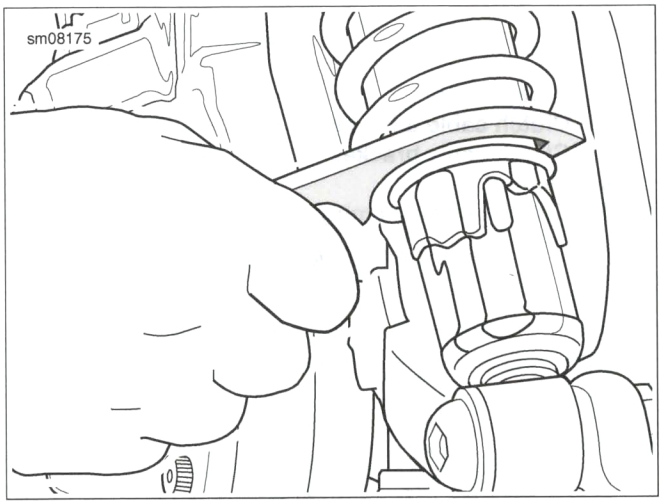

Figure 3-49. Shock Absorber Preload Adjustment

Table 3-11. Recommended Shock Preload: Five Position

LOAD*	POSITION
Less than 75 kg (165 lb)	1
75-89 kg (165-195 lb)	2
89-102 kg (195-225 lb)	3
102-116 kg (225-255 lb)	4
116 kg (255 lb) to maximum added weight allowed.	5
* Add the weight of the rider, passenger, riding gear, accessories, and cargo.	

Table 3-12. Maximum Added Weight Allowed

MODEL	MAX LOAD	
	kg	lb
XG500	182	402
XG750	182	402

COMPLETE

1. **Right Shock Absorber:** Install muffler. See 6.17 MUFFLER.
2. Lower rear wheel.

DISPOSAL

NOTE

The damper reservoir contains nitrogen gas and oil under pressure. Do not drill into the oil chamber.

1. Support the shock absorber in a vise.
2. See Figure 3-50. Use a center punch to start a hole between the weld and the reservoir body.

⚠WARNING

Do not expose shock absorber to heat source. Exposure to heat source can build excessive gas pressure, which could cause explosion and result in death or serious injury. (00600b)

⚠WARNING

Discharging pressurized oil and gas can pierce skin and cause flying debris, which could cause serious injury. Wear safety glasses and gloves. (00601b)

NOTES

- *A 6/64 through 1/8 in drill bit can be used.*
- *Use a sharp drill bit to prevent excessive heat buildup when discharging.*

3. Drill at the punch mark, retracting the drill as it penetrates the shell.
4. Allow gas to escape.
5. Dispose of shock absorber.

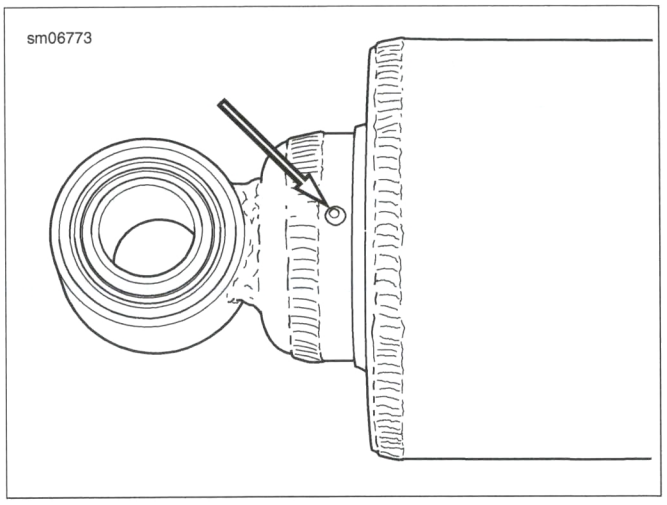

Figure 3-50. Center Punch/Drill Hole Location

PREPARE

1. Remove main fuse. See 8.4 POWER DISCONNECT.
2. Remove headlamp fairing. See 3.25 HEADLAMP FAIRING.
3. Remove left hand grip. See 3.26 HAND GRIPS.
4. Remove left handlebar switch housing. See 8.12 LEFT HANDLEBAR SWITCH HOUSING.
5. Lift rear of fuel tank. See 6.4 LIFT REAR OF FUEL TANK.

REMOVE

Clutch Cable

1. See Figure 3-51. Remove lower clutch cable.
   a. Loosen lower jamnut (4).
   b. Remove end of clutch cable (1) from clutch lever assembly (5).
   c. Remove lower jamnut from clutch cable.
   d. Remove clutch cable, upper jamnut and clutch cable adjuster (2) from clutch cable bracket (3).
2. See Figure 3-52. Remove upper clutch cable.
   a. Loosen clutch cable adjuster (2).
   b. Align slots in clutch cable adjuster, jamnut (3) and clutch hand lever assembly (4).
   c. Remove clutch cable (1) from clutch cable adjuster, jamnut and clutch hand lever assembly.
   d. Remove end of clutch cable from clutch hand lever (5).
3. Remove clutch cable.

Clutch Hand Control

1. See Figure 3-53. Remove clutch hand control assembly.
   a. Note position of clutch hand control assembly (1).
   b. Remove upper clutch cable (2).
   c. Disconnect clutch safety switch connectors (3).
   d. Loosen screw (5).
   e. Remove clutch hand control assembly from handlebar (4).

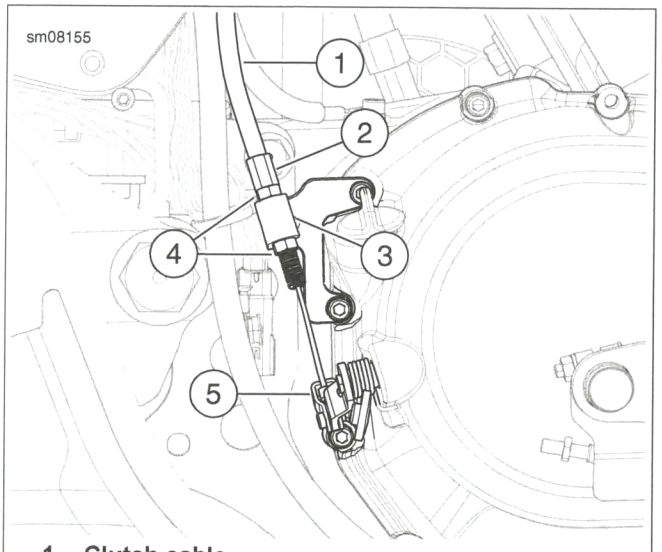

1. **Clutch cable**
2. **Clutch cable adjuster**
3. **Clutch cable bracket**
4. **Jamnut**
5. **Clutch lever assembly**

Figure 3-51. Lower Clutch Cable

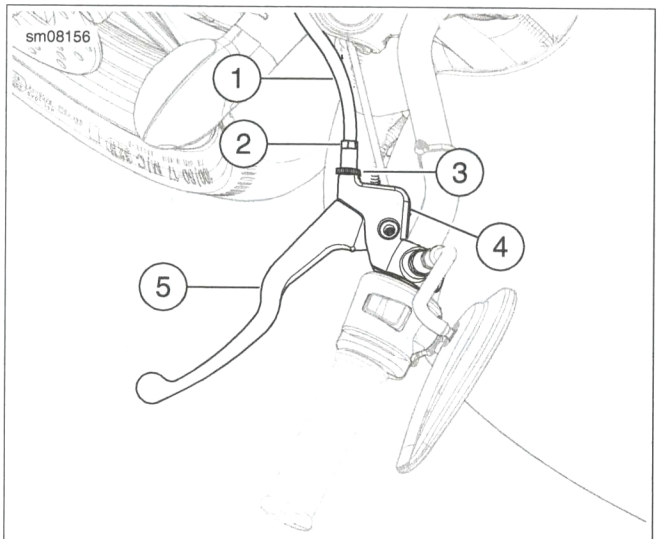

1. **Clutch cable**
2. **Clutch cable adjuster**
3. **Jamnut**
4. **Clutch hand lever assembly**
5. **Clutch hand lever**

Figure 3-52. Upper Clutch Cable

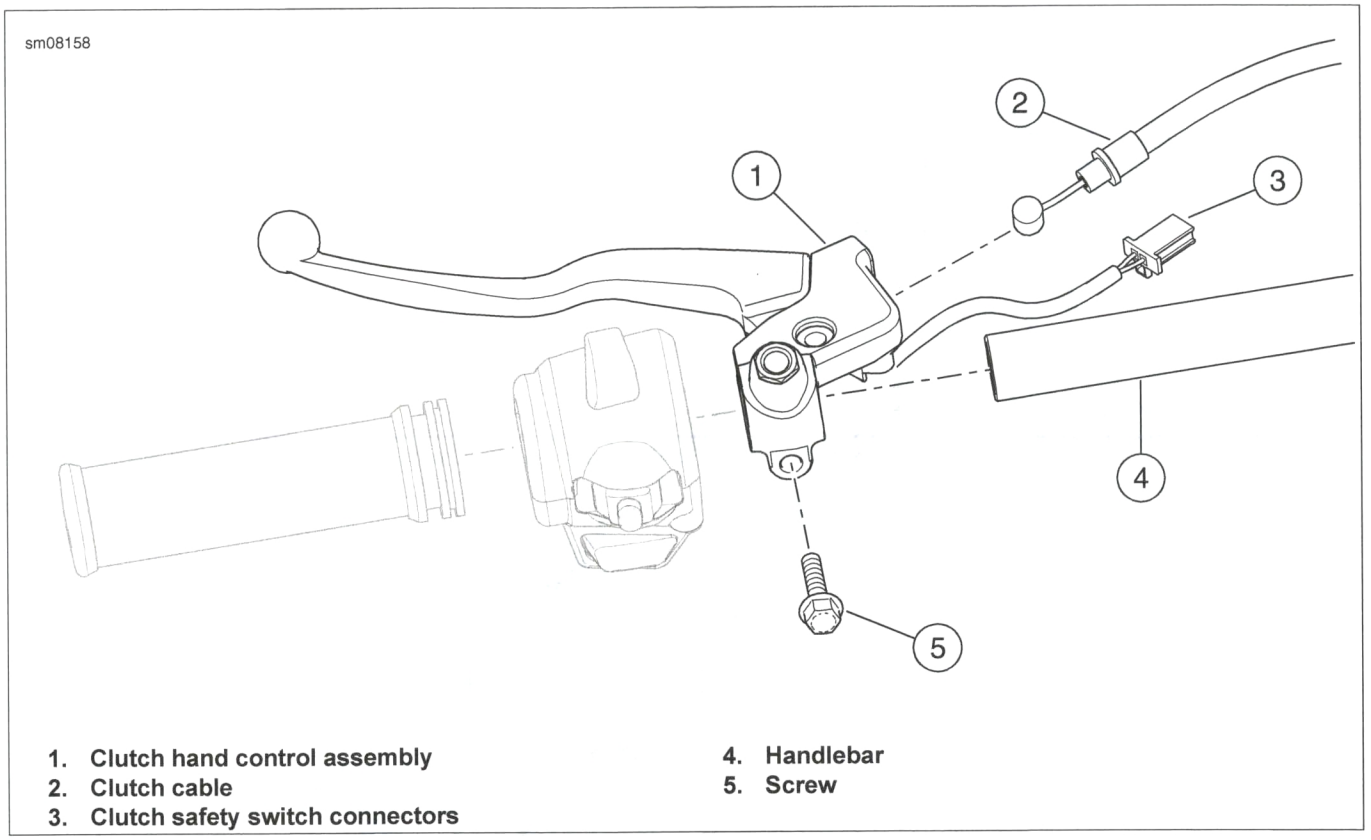

1. **Clutch hand control assembly**
2. **Clutch cable**
3. **Clutch safety switch connectors**
4. **Handlebar**
5. **Screw**

Figure 3-53. Clutch Hand Control Assembly

INSTALL

FASTENER	TORQUE VALUE	
Clutch hand control bracket screw	4.9-6.1 Nm	44-53 **in-lbs**

Clutch Cable

1. See Figure 3-54. Route clutch cable as shown.
   a. Insert clutch cable (1) behind headlamp fairing.
   b. Install **new** cable straps.
2. See Figure 3-52. Install upper clutch cable.
   a. Install end of clutch cable (1) into clutch hand lever (5).
   b. Verify slots in clutch cable adjuster (2), jamnut (3) and clutch hand lever assembly (4) are aligned.
   c. Install clutch cable through clutch hand lever assembly, clutch cable adjuster and jamnut.
3. See Figure 3-51. Install lower clutch cable.
   a. Install clutch cable (1), adjuster (2) and upper jamnut (4) through clutch cable bracket (3).
   b. Install lower jamnut on clutch cable.
   c. Install end of clutch cable into clutch lever assembly (5).
4. Adjust clutch. See 2.11 CHECK AND ADJUST CLUTCH.

Clutch Hand Control

1. See Figure 3-53. Install clutch hand control assembly.
   a. Install clutch hand control assembly (1) on handlebar (4).
   b. Install screw (5). Tighten to 4.9-6.1 Nm (44-53 **in-lbs**).
   c. Connect clutch safety switch connectors (3).
   d. Install upper clutch cable (2).

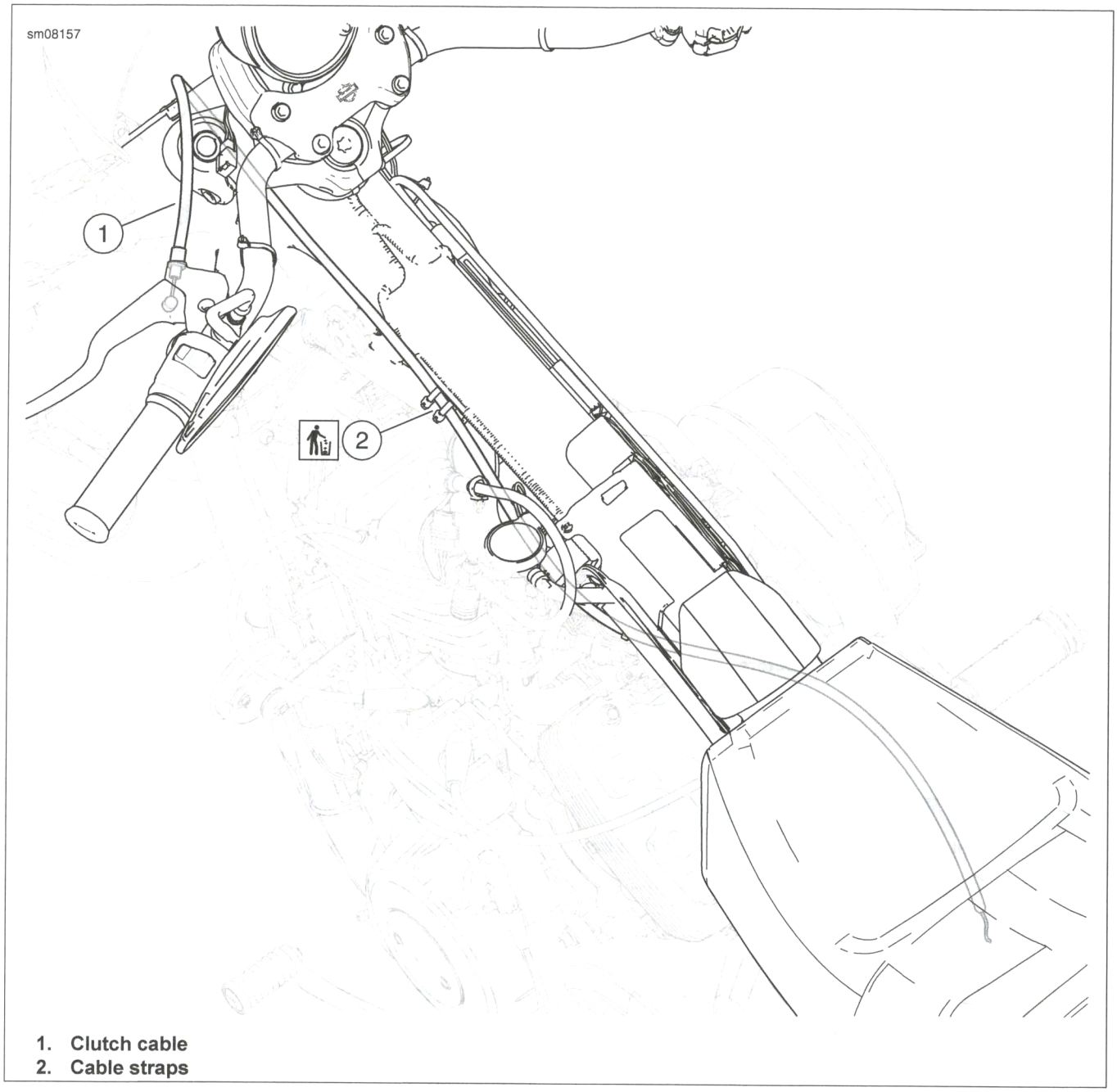

1. **Clutch cable**
2. **Cable straps**

Figure 3-54. Clutch Cable Routing

CLEAN AND INSPECT

1. Inspect clutch lever and cable for wear or damage. Replace or repair as necessary.
2. Inspect clutch cable.
   a. Verify smooth operation. Replace as necessary.

NOTICE

The clutch control cable must be oiled and adjusted periodically to compensate for lining wear. See MAINTENANCE SCHEDULING in this manual. Failure to oil and adjust the clutch control cable can result in equipment damage. (00203b)

3. Lubricate clutch hand lever and cable with HARLEY ® LUBE.

COMPLETE

1. Secure rear of fuel tank. See 6.4 LIFT REAR OF FUEL TANK.
2. Install left handlebar switch housing. See 8.12 LEFT HANDLEBAR SWITCH HOUSING.
3. Install left hand grip. See 3.26 HAND GRIPS.
4. Install headlamp fairing. See 3.25 HEADLAMP FAIRING.
5. Install main fuse. See 8.4 POWER DISCONNECT.

PREPARE

1. Remove main fuse. See 8.4 POWER DISCONNECT.
2. Remove headlamp fairing. See 3.25 HEADLAMP FAIRING.

REMOVE

Right Hand Grip

1. See Figure 3-55. Remove right hand grip.
   a. Slide rubber boot (8) off control cable adjusters (9) and jamnuts (10).
   b. Loosen jamnuts.
   c. Turn adjusters to shorten cable housings.
   d. Remove long screws (6).
   e. Remove upper (3) and lower (5) switch housings.
   f. See Figure 3-56. Remove ferrules and cables from right hand grip.
   g. See Figure 3-55. Slide right hand grip (1) off handlebar (2).

Throttle Cables

1. Remove fuel tank. See 6.5 FUEL TANK.
2. See Figure 3-55. Remove switch housings.
   a. Slide rubber boot (8) off control cable adjusters (9) and jamnuts (10).
   b. Loosen jamnuts.
   c. Turn adjusters to shorten cable housings.
   d. Remove long screws (6).
   e. See Figure 3-56. Remove ferrules and cables from right hand grip.
   f. See Figure 3-55. Remove upper (3) and lower (5) switch housings.
3. See Figure 3-55. Disconnect cables.
4. Remove cables.
   a. See Figure 3-55. Remove short screw (12) and cable retaining plate (13).
   b. Remove idle (11) and throttle (7) cable from lower switch housing.
   c. See Figure 3-56. Open harness caddy (1).
   d. Cut and discard cable straps (2).
   e. Remove cables (3, 4) from caddy.
   f. See Figure 3-57. Remove ferrules and cables (1, 2) from throttle cam (3).

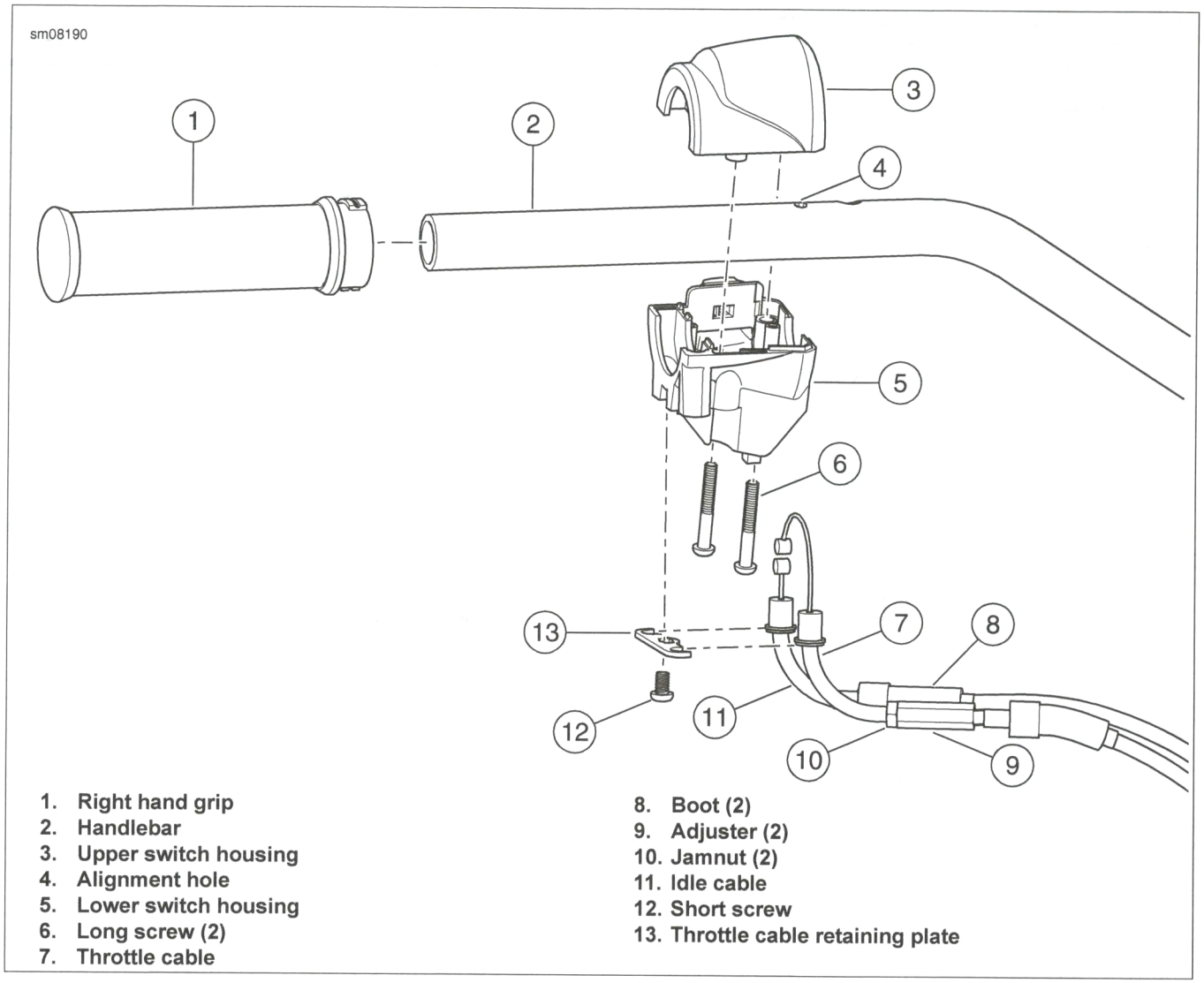

1. Right hand grip
2. Handlebar
3. Upper switch housing
4. Alignment hole
5. Lower switch housing
6. Long screw (2)
7. Throttle cable
8. Boot (2)
9. Adjuster (2)
10. Jamnut (2)
11. Idle cable
12. Short screw
13. Throttle cable retaining plate

Figure 3-55. Throttle Control

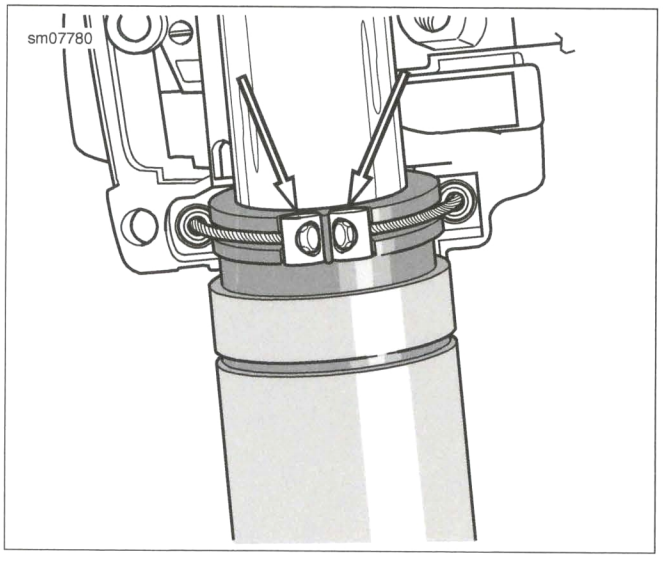

Figure 3-56. Throttle Cable Ferrules

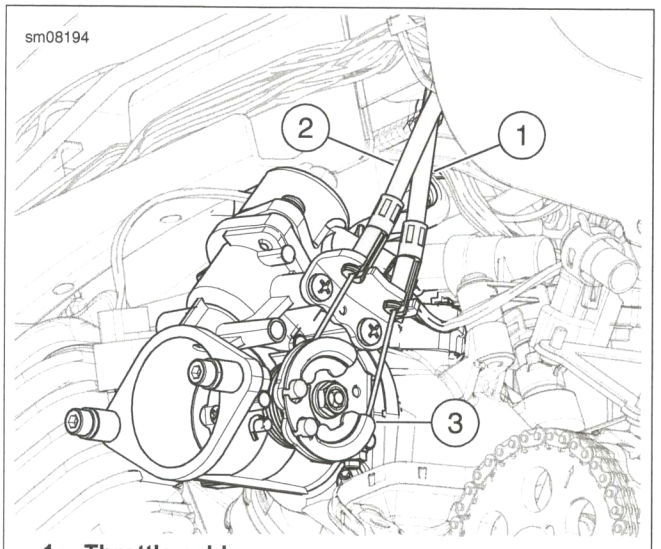

1. Throttle cable
2. Idle cable
3. Throttle cam

Figure 3-57. Throttle Cam

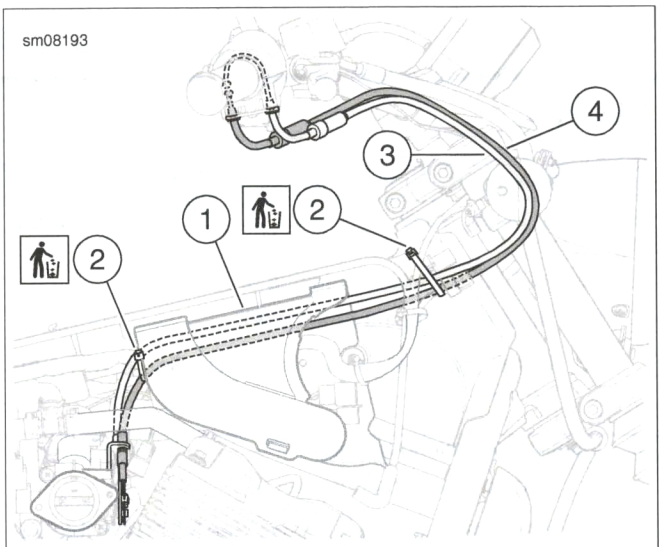

1. **Harness caddy**
2. **Cable strap**
3. **Throttle cable**
4. **Idle cable**

Figure 3-58. Throttle Cable Routing

INSTALL

FASTENER	TORQUE VALUE	
Screw, cable retaining plate	0.9-1.1 Nm	8-9 **in-lbs**
Screw, switch housing	0.9-1.1 Nm	8-9 **in-lbs**
Screw, switch housing	0.9-1.1 Nm	8-9 **in-lbs**

Throttle Cables

1. See Figure 3-55. Install cables.
   a. Route throttle (3) and idle (4) cables through harness caddy (1).
   b. Install **new** cable straps (2).
   c. Close caddy.
2. See Figure 3-57. Connect throttle cables.
   a. Install cables (1-2) and ferrules in throttle cam (3).
   b. See Figure 3-55. Install idle (11) and throttle (7) cable in lower switch housing (5).
   c. Install cable retaining plate (13) and short screw (12). Tighten to 0.9-1.1 Nm (8-9 **in-lbs**).
   d. See Figure 3-56. Install ferrules and inner cables in right hand grip.
   e. See Figure 3-55. Install and align upper switch housing (3) with alignment hole (4) on handlebar.
   f. Install lower switch housing (5).
   g. Install long screws (6). Tighten to 0.9-1.1 Nm (8-9 **in-lbs**).
3. Install fuel tank. See 6.5 FUEL TANK.
4. Adjust cables. See 2.10 CHECK AND ADJUST THROTTLE CABLES

Right Hand Grip

1. See Figure 3-55. Install right hand grip.
   a. Slide right hand grip (1) onto handlebar (2).
   b. See Figure 3-56. Install ferrules and cables.
   c. Install and align upper switch housing (3) with alignment hole (4) on handlebar.
   d. Install lower switch housing (5).
   e. Install long screws (6). Tighten to 0.9-1.1 Nm (8-9 **in-lbs**).
2. Adjust cables. See 2.10 CHECK AND ADJUST THROTTLE CABLES

CLEAN AND INSPECT

⚠WARNING

Before starting engine, be sure throttle control will snap back to idle position when released. A throttle control that prevents engine from automatically returning to idle can lead to loss of control, which could result in death or serious injury. (00390a)

1. Inspect inside bore of left hand grip for wear or damage. Replace as necessary.
2. Inspect throttle and idle cables. Verify smooth operation. Replace as necessary.
3. Lubricate throttle housing and cables.
   a. Apply a light coating of graphite to handlebar and inside surface of housings.
   b. Pour two drops of HARLEY LUBE into cable housings.

COMPLETE

1. Install headlamp fairing. See 3.25 HEADLAMP FAIRING.
2. Install main fuse. See 8.4 POWER DISCONNECT.

REMOVE

1. See Figure 3-59. Remove headlamp fairing.
   a. Remove screws (1) and washers (3).
   b. Pull headlamp fairing (6) away from upper fairing bracket (4).
   c. Pull headlamp fairing away from lower fairing bracket (9) to remove posts (7) from grommets (8).
2. Remove upper fairing bracket.
   a. Remove handlebar riser screws. See 3.27 HANDLEBAR.
   b. Remove upper fairing bracket (4).
3. Remove lower fairing bracket.
   a. Remove headlamp mounting block. See 8.18 HEADLAMP.
   b. Remove lower fairing bracket (9).

INSTALL

FASTENER	TORQUE VALUE	
Headlamp fairing screw	2.3-3.3 Nm	21-29 **in-lbs**

1. Figure 3-59. Install lower fairing bracket.
   a. Align lower fairing bracket (9).
   b. Install headlamp mounting block. See 8.18 HEADLAMP
2. Install upper fairing bracket.
   a. Align upper fairing bracket (4).
   b. Install handlebar riser screws. See 3.27 HANDLEBAR.
3. Install headlamp fairing.
   a. Align posts (7) to grommets (8).
   b. Install headlamp fairing (6) onto lower fairing bracket (9).
   c. Align headlamp fairing to upper fairing bracket (4).
   d. Install washers (2) and screws (1) to clips (2). Tighten to 2.3-3.3 Nm (21-29 **in-lbs**).

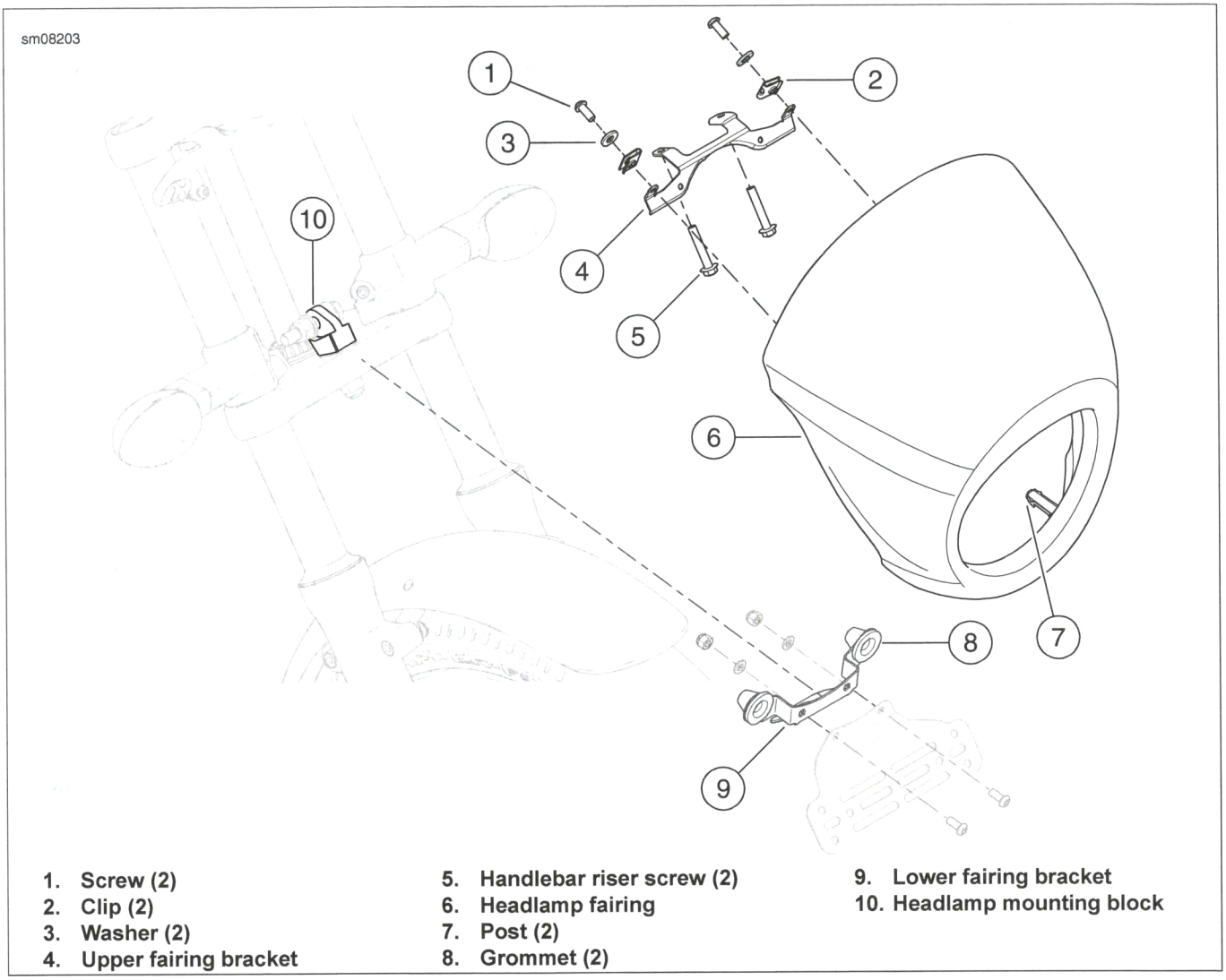

1. Screw (2)
2. Clip (2)
3. Washer (2)
4. Upper fairing bracket
5. Handlebar riser screw (2)
6. Headlamp fairing
7. Post (2)
8. Grommet (2)
9. Lower fairing bracket
10. Headlamp mounting block

Figure 3-59. Headlamp Fairing

REMOVE

Left

1. Remove left handlebar switch housing. See 8.12 LEFT HANDLEBAR SWITCH HOUSING.
2. Remove left hand grip.
   a. Slice hand grip open with a sharp knife.
   b. Peel hand grip open.
   c. Remove from handlebar.

Right

1. See 3.24 THROTTLE CONTROL for removal instructions.

INSTALL

Left

1. Install left hand grip.
   a. Prepare the left grip end of the handlebar with emery cloth.
   b. Clean the left grip end of the handlebar with acetone.
   c. Apply LOCTITE 770 PRISM PRIMER to the inside of the **new** hand grip.
   d. Remove excess primer. Wait 2 minutes for the primer to set.
   e. Apply LOCTITE 411 PRISM INSTANT ADHESIVE to the inside of the **new** hand grip.

   NOTE
   LOCTITE 411 PRISM INSTANT ADHESIVE sets in 4 minutes and cures in 24 hours.

   f. Install the **new** hand grip with a twisting motion.
2. Install left handlebar switch housing. See 8.12 LEFT HANDLEBAR SWITCH HOUSING.

Right

1. See 3.24 THROTTLE CONTROL for installation instructions.

PREPARE

1. Remove main fuse. See 8.4 POWER DISCONNECT.
2. Remove headlamp fairing. See 3.25 HEADLAMP FAIRING.
3. Remove right handlebar switch housing. See 8.13 RIGHT HANDLEBAR SWITCH HOUSING.
4. Remove throttle control. See 3.24 THROTTLE CONTROL.
5. Remove front brake master cylinder. See 3.11 FRONT BRAKE MASTER CYLINDER.
6. Remove left hand grip. See 3.26 HAND GRIPS.
7. Remove left handlebar switch housing. See 8.12 LEFT HANDLEBAR SWITCH HOUSING.
8. Remove clutch hand control. See 3.23 CLUTCH CONTROL.
9. Remove speedometer. See 8.14 SPEEDOMETER.
10. Remove headlamp. See 8.18 HEADLAMP.

REMOVE

Handlebar

1. See Figure 3-60. Remove handlebar.
   a. Remove short screws (7).
   b. Remove upper riser (6).
   c. Remove handlebar (1) from lower riser (2).

Handlebar Riser

1. Remove handlebar.
2. See Figure 3-60. Remove lower riser.
   a. Remove long screws (5) and upper fairing bracket (4).
   b. Remove lower riser (2).

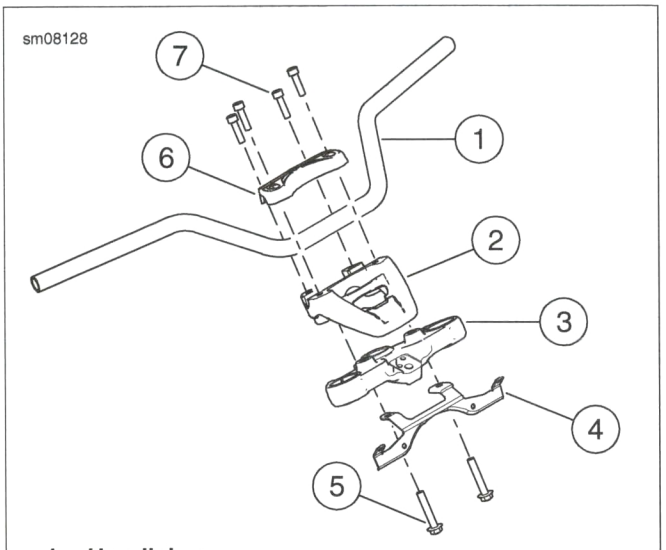

1. **Handlebar**
2. **Lower handlebar riser**
3. **Upper fork bracket**
4. **Upper fairing bracket**
5. **Long screws (2)**
6. **Upper handlebar riser**
7. **Short screws (4)**

Figure 3-60. Handlebar

INSTALL

FASTENER	TORQUE VALUE	
Lower handlebar riser screw	42.7-47.3 Nm	32-34 ft-lbs
Upper handlebar riser screw	22.8-25.2 Nm	17-18 ft-lbs

Handlebar Riser

1. See Figure 3-60. Install lower riser.
   a. Insert long screws (5) through upper fairing bracket (4) and upper fork bracket (3).
   b. Install lower riser (2) to upper fork bracket.
   c. Tighten long screws to42.7-47.3 Nm (32-34 ft-lbs).
2. Install handlebar.

Handlebar

1. See Figure 3-60. Install handlebar.
   a. Center handlebar (1) in lower riser (2).
   b. Install upper riser (6).
   c. Install short screws (7). Tighten to 22.8-25.2 Nm (17-18 ft-lbs).

COMPLETE

1. Install headlamp. See 8.18 HEADLAMP.
2. Install speedometer. See 8.14 SPEEDOMETER.
3. Install clutch hand control. See 3.23 CLUTCH CONTROL.

4. Install left handlebar switch housing. See 8.12 LEFT HANDLEBAR SWITCH HOUSING.
5. Install left hand grip. See 3.26 HAND GRIPS.
6. Install front brake master cylinder. See 3.11 FRONT BRAKE MASTER CYLINDER.
7. Install throttle control. See 3.24 THROTTLE CONTROL.
8. Install right handlebar switch housing. See 8.13 RIGHT HANDLEBAR SWITCH HOUSING.
9. Install headlamp fairing. See 3.25 HEADLAMP FAIRING.
10. Install main fuse. See 8.4 POWER DISCONNECT.

REMOVE

1. See Figure 3-61. Remove mirror.
   a. Remove mirror (1).
   b. Remove tube nut (3).
   c. Remove mirror mount (4).

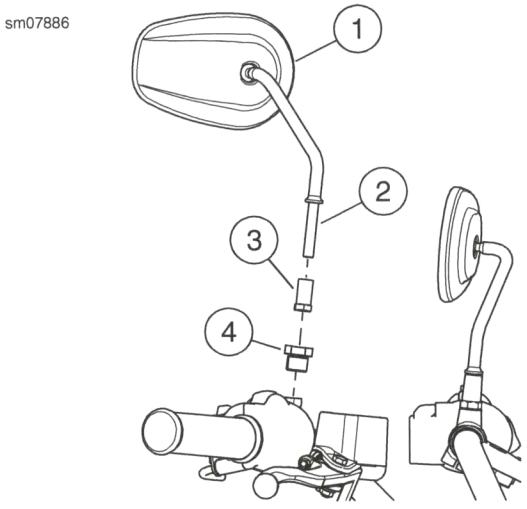

1. **Mirror**
2. **Mirror stem**
3. **Tube nut**
4. **Mirror mount**

Figure 3-61. Mirror

INSTALL

FASTENER	TORQUE VALUE	
Mirror mount	11.7-14.3 Nm	104-126 **in-lbs**
Mirror tube nut	11.7-14.3 Nm	104-126 **in-lbs**

1. See Figure 3-61. Install mirror.
   a. Install mirror mount (4). Tighten to 11.7-14.3 Nm (104-126 **in-lbs**).
   b. Install tube nut (3) to mirror stem (2). Hand-tighten.
   c. Install mirror and tube nut to mirror mount. Hand-tighten.
   d. Adjust mirror (1).
   e. Tighten tube nut to 11.7-14.3 Nm (104-126 **in-lbs**).

REMOVE

1. See Figure 3-62. Remove front fender.
   a. Support fender (1).
   b. Remove screws (5) and nuts (2).
   c. Remove fender.

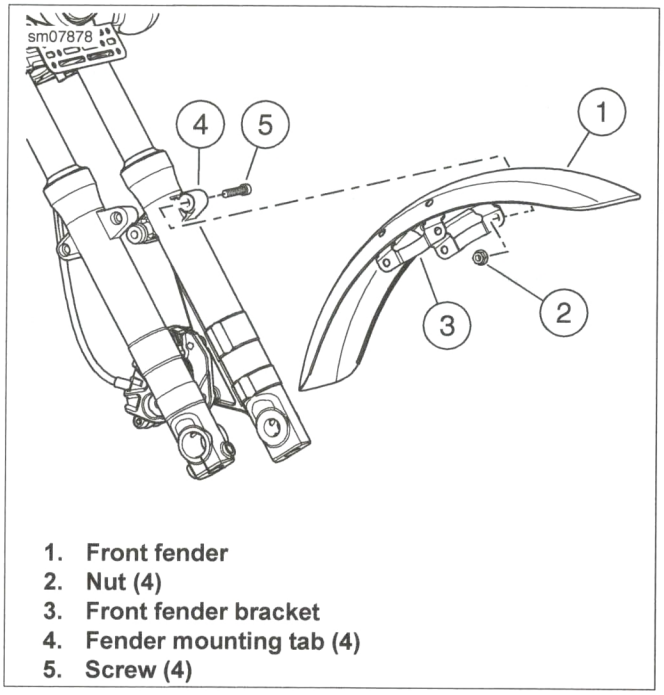

1. **Front fender**
2. **Nut (4)**
3. **Front fender bracket**
4. **Fender mounting tab (4)**
5. **Screw (4)**

Figure 3-62. Front Fender

INSTALL

FASTENER	TORQUE VALUE	
Front fender screw	22.9-28.1 Nm	17-20 ft-lbs

1. See Figure 3-62. Install front fender.
   a. Align front fender bracket (3) between fender mounting tabs (4).
   b. Install screws (5) and nuts (2). Tighten to 22.9-28.1 Nm (17-20 ft-lbs).

PREPARE

1. Remove seat. See 3.36 SEAT.

REMOVE

1. See Figure 3-63. Remove rear fender.
   a. Remove long screws (3) and short screws (4).
   b. Remove fender support covers (2).
   c. Remove spacers (5).
   d. Remove rear fender (1).

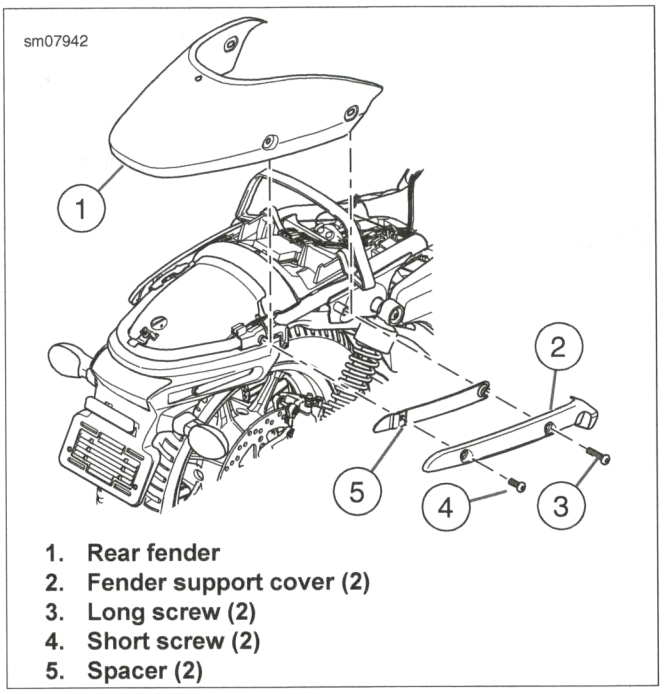

1. **Rear fender**
2. **Fender support cover (2)**
3. **Long screw (2)**
4. **Short screw (2)**
5. **Spacer (2)**

Figure 3-63. Rear Fender

INSTALL

FASTENER	TORQUE VALUE	
Rear fender screw	45.0-55.0 Nm	34-40 ft-lbs

1. See Figure 3-63. Install rear fender.
   a. Install rear fender (1).
   b. Insert long screws (3) and short screws (4) through fender support covers (2) and spacers (5).
   c. Install fender support cover assemblies. Tighten to 45.0-55.0 Nm (34-40 ft-lbs).

COMPLETE

1. Install seat. See 3.36 SEAT.

PREPARE

1. Remove seat. See 3.36 SEAT.

REMOVE

1. See Figure 3-64. Remove saree guards.
   a. Remove short screws (6) and long screws (7).
   b. Remove left fender support cover (8).
   c. Remove left saree guard (1).
   d. Remove right fender support cover (3).
   e. Remove right saree guard (2).

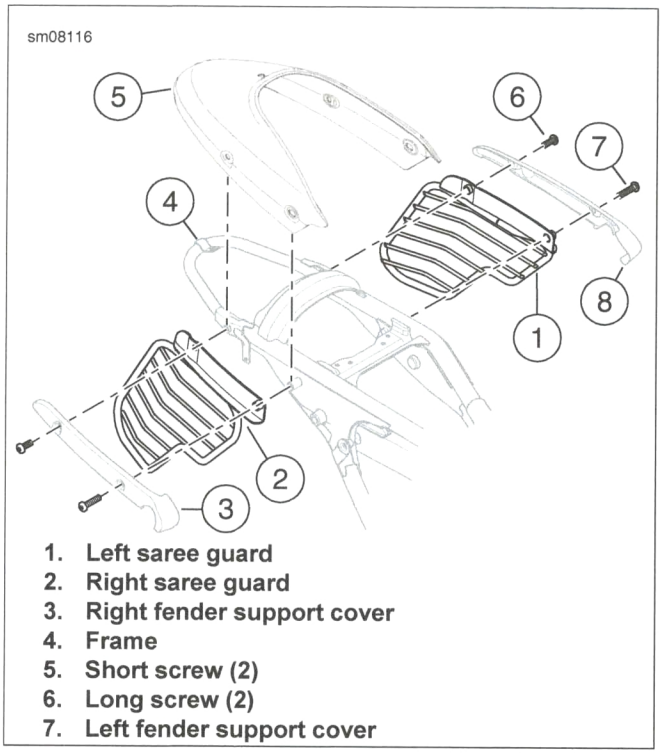

1. **Left saree guard**
2. **Right saree guard**
3. **Right fender support cover**
4. **Frame**
5. **Short screw (2)**
6. **Long screw (2)**
7. **Left fender support cover**

Figure 3-64. Saree Guards

INSTALL

FASTENER	TORQUE VALUE	
Rear fender screw	45.0-55.0 Nm	34-40 ft-lbs
Rear fender screw	45.0-55.0 Nm	34-40 ft-lbs

1. See Figure 3-64. Install saree guards.
   a. Align rear fender (5) to frame (4).
   b. Insert short screw (6) and long screw (7) through right fender support cover (3) and right saree guard (2).
   c. Install right fender support cover and right saree guard. Tighten to 45.0-55.0 Nm (34-40 ft-lbs).
   d. Insert short screw (6) and long screw (7) through left fender support cover (8) and left saree guard (1).
   e. Install left fender support cover and left saree guard. Tighten to 45.0-55.0 Nm (34-40 ft-lbs).

COMPLETE

1. Install seat. See 3.36 SEAT.

PREPARE

1. Remove headlamp fairing. See 3.25 HEADLAMP FAIRING.

REMOVE

1. See Figure 3-65. Remove front license plate bracket.
   a. Remove screws (5), washers (2) and nuts (1).
   b. Remove front license plate bracket (4).

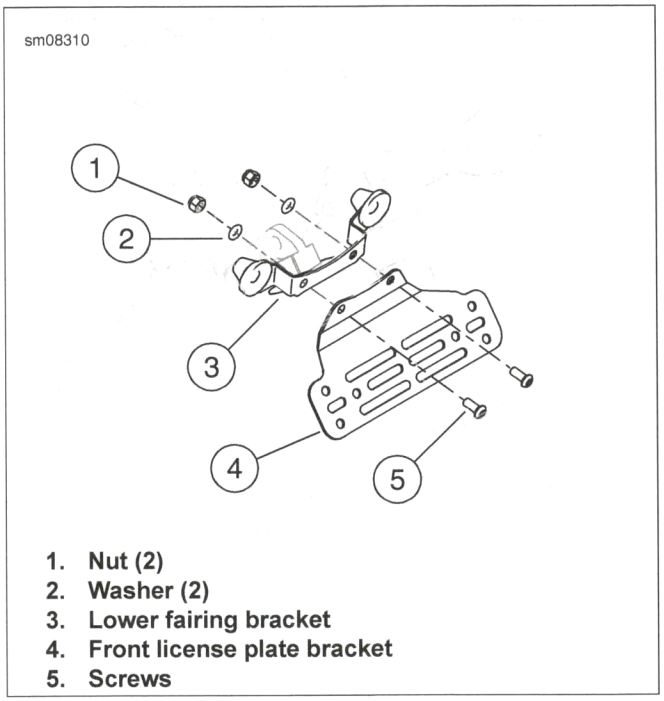

1. **Nut (2)**
2. **Washer (2)**
3. **Lower fairing bracket**
4. **Front license plate bracket**
5. **Screws**

Figure 3-65. Front License Plate Bracket

INSTALL

FASTENER	TORQUE VALUE	
Front license plate bracket screw	6.2-6.8 Nm	55-60 **in-lbs**

1. See Figure 3-65. Install front license plate bracket.
   a. Insert screws (5) through front license plate bracket (4).
   b. Align front license plate bracket to lower fairing bracket (3).
   c. Install washers (2) and nuts (1). Tighten to 6.2-6.8 Nm (55-60 **in-lbs**).

COMPLETE

1. Install headlamp fairing. See 3.25 HEADLAMP FAIRING.

REAR LICENSE PLATE BRACKET 3.33

PREPARE

1. Remove main fuse. See 8.4 POWER DISCONNECT.
2. Remove seat. See 3.36 SEAT.
3. Remove rear fender. See 3.30 REAR FENDER.

REMOVE

1. See Figure 3-66. Remove license plate module.
   a. Disconnect electrical connectors (4).
   b. Remove screws (3).
   c. Lower rear of license plate module (1). Pull away from frame.

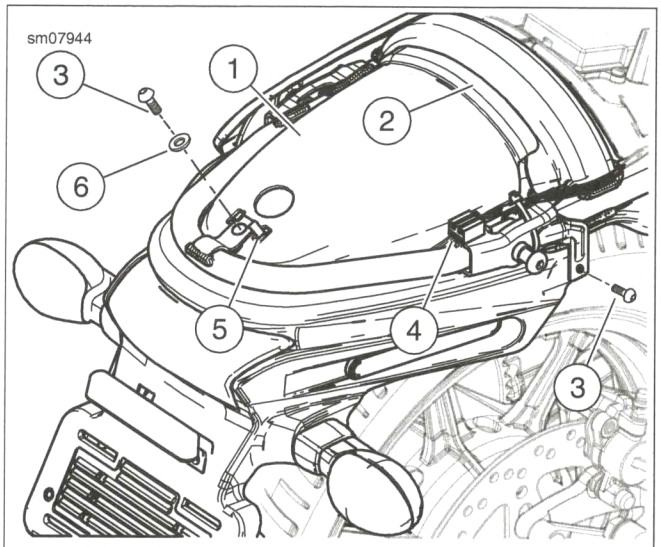

1. **Rear license plate module**
2. **Tab**
3. **Screw (3)**
4. **Electrical connector (3)**
5. **Clip**

Figure 3-66. Rear License Plate Module

INSTALL

FASTENER	TORQUE VALUE	
License plate module screw	2.3-3.3 Nm	21-29 **in-lbs**

1. See Figure 3-66. Install rear license plate module.
   a. Position license plate module (1).
   b. Place tab (2) over frame.
   c. Install screws (3). Tighten to 2.3-3.3 Nm (21-29 **in-lbs**).
   d. Connect electrical connectors (4).

COMPLETE

1. Install rear fender. See 3.30 REAR FENDER.
2. Install seat. See 3.36 SEAT.
3. Install main fuse. See 8.4 POWER DISCONNECT.

PREPARE

1. Remove main fuse. See 8.4 POWER DISCONNECT.

REMOVE

Right Side

1. See Figure 3-67. Remove right side rider foot control assembly.
   a. Remove screws (3).
   b. Remove right side rider foot control assembly (1) from frame (2).
   c. Move right side rider foot control assembly toward front of vehicle to remove brake rod assembly (4) from master cylinder.

Left Side

1. See Figure 3-68. Disconnect shift lever rod assembly.
   a. Remove nut (9).
   b. Remove screw (3) and nut (9) from shift lever rod assembly (10) and shifter shaft lever (8).
2. Detach jiffy stand sensor.
   a. Remove screw (5) and nut (7) securing jiffy stand sensor (6).
   b. Set jiffy stand sensor aside.
3. Remove left side rider foot control assembly.
   a. Remove long screws (2).
   b. Remove jiffy stand sensor bracket (4).
   c. Remove left side rider foot control assembly (1).

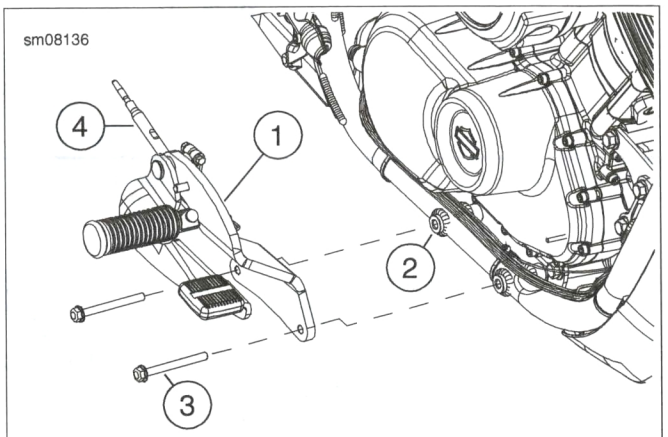

1. **Right side rider foot control assembly**
2. **Frame**
3. **Screw (2)**
4. **Brake rod assembly**

Figure 3-67. Right Side Rider Foot Control Assembly

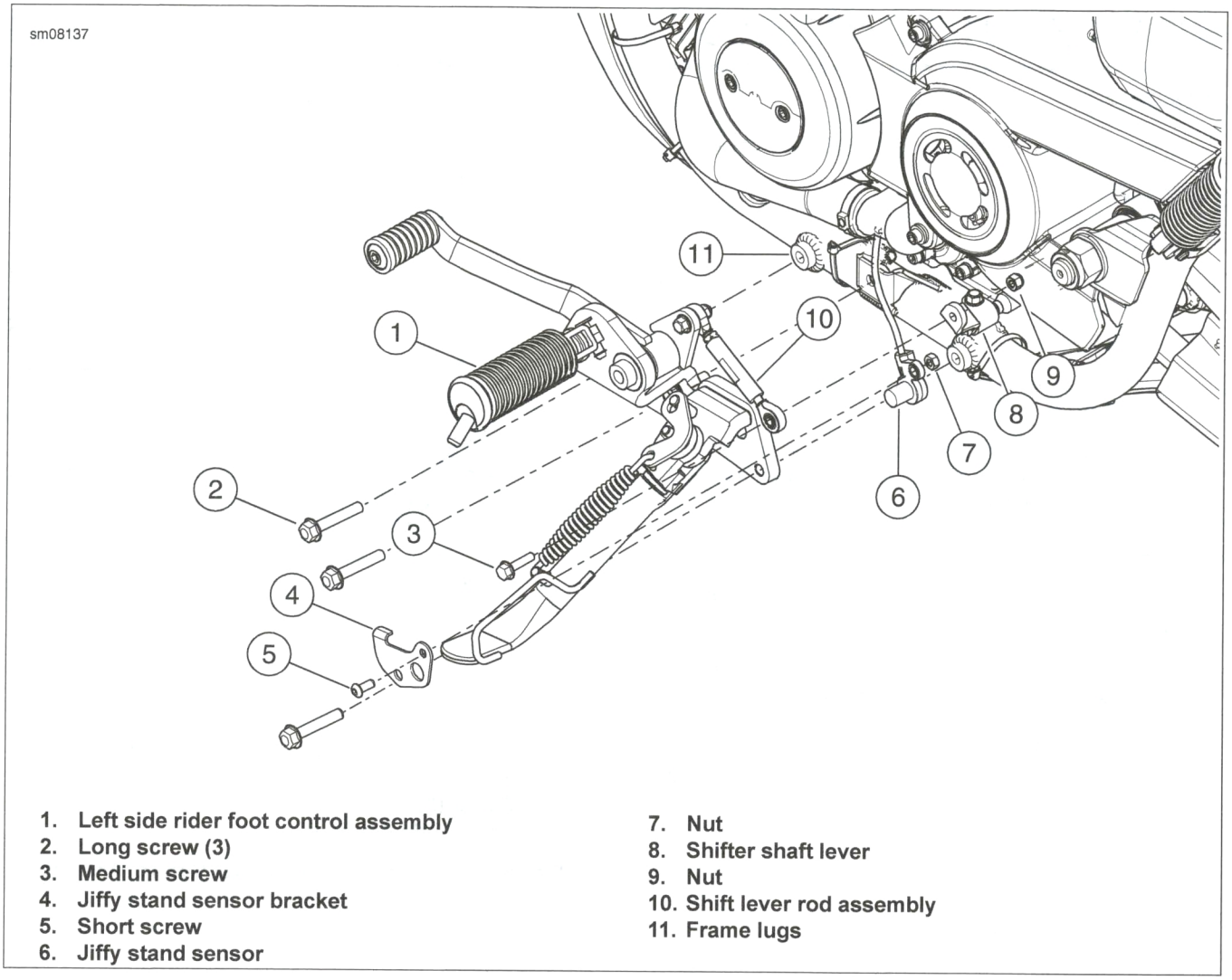

1. **Left side rider foot control assembly**
2. **Long screw (3)**
3. **Medium screw**
4. **Jiffy stand sensor bracket**
5. **Short screw**
6. **Jiffy stand sensor**
7. **Nut**
8. **Shifter shaft lever**
9. **Nut**
10. **Shift lever rod assembly**
11. **Frame lugs**

Figure 3-68. Left Side Rider Foot Control Assembly

INSTALL

FASTENER	TORQUE VALUE	
Engine mount screw	22.0-29.0 Nm	17-21 ft-lbs
Left side rider foot control screw	22.0-29.0 Nm	17-21 ft-lbs
Jiffy stand sensor screw	9.0-11.0 Nm	80-97 **in-lbs**
Shift lever rod assembly screw	4.6-6.1 Nm	41-53 **in-lbs**

Right Side

1. See Figure 3-67. Install right side rider foot control assembly.
   a. Insert brake rod assembly (4) into master cylinder.
   b. Align right side rider foot control assembly (1) to lugs in frame (2).
   c. Install screw (3). Tighten to 22.0-29.0 Nm (17-21 ft-lbs).

Left Side

1. See Figure 3-68. Install left side rider foot control assembly.
   a. Install one long screw (2) through jiffy stand sensor bracket (4) and left side rider foot control (1).
   b. Align left side rider foot control assembly (1) to frame lugs (11).
   c. Install remaining screws and left side rider foot control assembly. Tighten to 22.0-29.0 Nm (17-21 ft-lbs).
2. Install jiffy stand sensor (6).
   a. Install short screw (5) through jiffy stand sensor bracket and jiffy stand sensor (6).
   b. Install nut (7). Tighten to 9.0-11.0 Nm (80-97 **in-lbs**).
3. Connect shift lever rod assembly.
   a. Insert medium screw (3) through shift lever rod assembly (10) and shifter shaft lever (8).
   b. Install nut (5). Tighten to 4.6-6.1 Nm (41-53 **in-lbs**).

DISASSEMBLE

Right Side

1. See Figure 3-69. Remove footpeg assembly.
   a. Remove retaining ring (5).
   b. Remove clevis pin (3).
   c. Remove footpeg assembly (2).
   d. Remove spring washer (4).
2. Remove brake lever assembly.
   a. Remove spring (11).
   b. Remove washer (8) and nut (9).
   c. Remove screw (7).
   d. Remove brake rod assembly (10).
   e. Remove brake lever assembly (1) from right footpeg mount (6).

Left Side

1. See Figure 3-70. Remove footpeg assembly.
   a. Remove retaining ring (5).
   b. Remove clevis pin (3).
   c. Remove footpeg assembly (2).
   d. Remove spring washer (4).
2. Remove gear shift lever.
   a. Remove nut (11).
   b. Remove screw (7) from gear shift lever (1) and shift lever rod assembly (10).
   c. Remove E-clip (9) and washer (8).
   d. Remove gear shift lever from left footpeg mount (6).

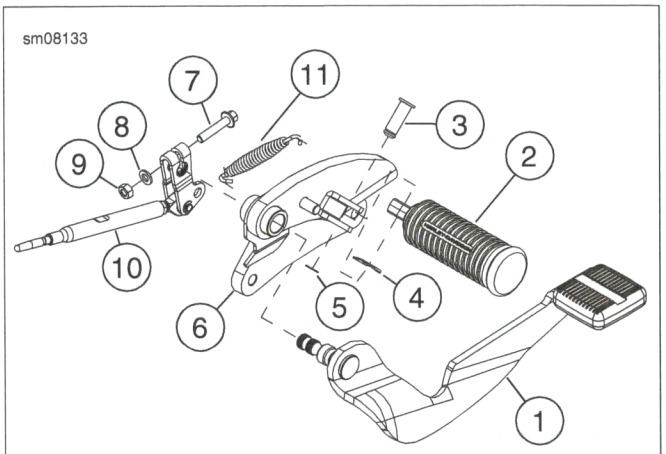

1. **Brake lever assembly**
2. **Footpeg assembly**
3. **Clevis pin**
4. **Spring washer**
5. **Retaining ring**
6. **Right footpeg mount**
7. **Screw**
8. **Washer**
9. **Nut**
10. **Brake rod assembly**
11. **Spring**

Figure 3-69. Right Side Rider Foot Control

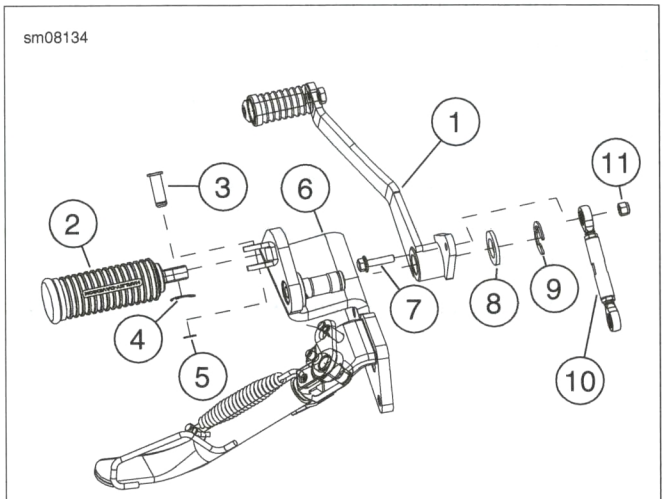

1. **Gear shift lever**
2. **Footpeg assembly**
3. **Clevis pin**
4. **Spring washer**
5. **Retaining ring**
6. **Left footpeg mount**
7. **Screw**
8. **Washer**
9. **E-clip**
10. **Shift lever rod assembly**
11. **Nut**

Figure 3-70. Left Side Rider Foot Control

ASSEMBLE

FASTENER	TORQUE VALUE	
Rear brake lever screw	7.0-9.0 Nm	62-79 **in-lbs**
Shift lever rod assembly screw	4.6-6.1 Nm	41-53 **in-lbs**

Right Side

1. See Figure 3-69. Install brake lever assembly.
   a. Install brake lever assembly (1) through right footpeg mount (6).
   b. Install brake rod assembly (10).
   c. Install screw (7).
   d. Install washer (8) and nut (9). Tighten to 7.0-9.0 Nm (62-79 **in-lbs**).
   e. See Figure 3-71. Install spring.

⚠WARNING

Footrests must fold up and toward rear of motorcycle if struck. Failure to set footrests to fold up and back could result in death or serious injury. (00366a)

2. See Figure 3-69.Install footpeg assembly.
   a. Align footpeg assembly (2) to right footpeg mount (6).
   b. Install spring washer (4).
   c. Install clevis pin (3).
   d. Install retaining ring (5).

Left Side

1. See Figure 3-70. Install gear shift lever.
   a. Install gear shift lever (1) to left footpeg mount (6).
   b. Install washer (8) and E-clip (9).
   c. Install screw (7) through gear shift lever and shift lever rod assembly (10).
   d. Install nut (11). Tighten to 4.6-6.1 Nm (41-53 **in-lbs**).

⚠WARNING

Footrests must fold up and toward rear of motorcycle if struck. Failure to set footrests to fold up and back could result in death or serious injury. (00366a)

2. Install footpeg assembly.
   a. Align footpeg assembly (2) to left footpeg mount (6).
   b. Install spring washer (4).
   c. Install clevis pin (3).
   d. Install retaining ring (5).

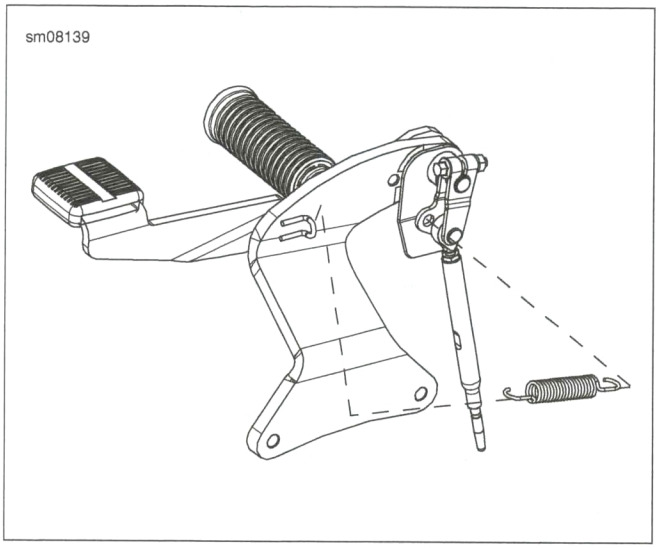

Figure 3-71. Brake Lever Spring Installation

COMPLETE

1. Install main fuse. See 8.4 POWER DISCONNECT.

REMOVE

1. See Figure 3-72. Remove footpeg assembly.
   a. Remove retaining ring (4).
   b. Remove clevis pin (5).
   c. Remove footpeg assembly (2).
   d. Remove spring washer (3).

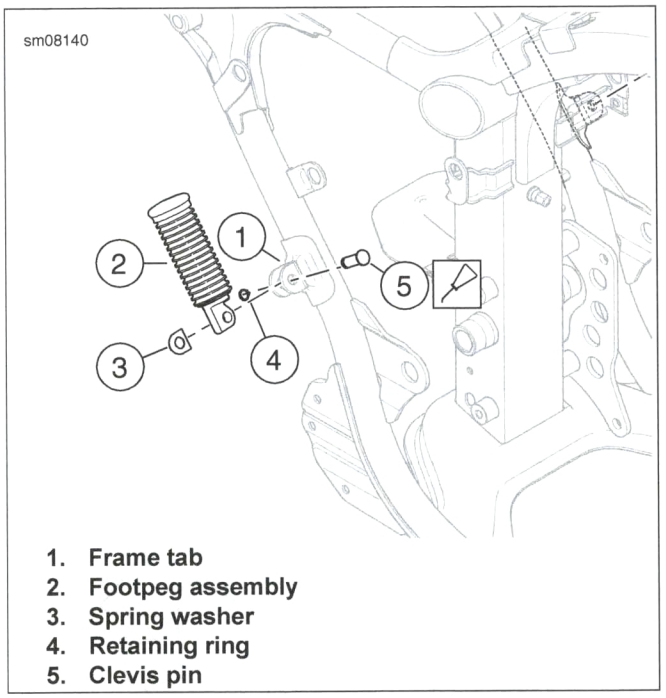

1. **Frame tab**
2. **Footpeg assembly**
3. **Spring washer**
4. **Retaining ring**
5. **Clevis pin**

Figure 3-72. Passenger Footrest

INSTALL

⚠WARNING

Footrests must fold up and toward rear of motorcycle if struck. Failure to set footrests to fold up and back could result in death or serious injury. (00366a)

1. See Figure 3-72. Install footpeg assembly.
   a. Align footpeg assembly (2) to frame tab (1).
   b. Install spring washer (3).
   c. Install clevis pin (5).
   d. Install retaining ring (4).

CLEAN AND INSPECT

1. Clean all parts thoroughly.
2. Inspect footpeg mount bushings for wear. Replace or repair as necessary.
3. Inspect rubber footpeg assemblies for wear. Replace as necessary.
4. Lubricate clevis pins with SPECIAL PURPOSE GREASE.

REMOVE

Seat

1. See Figure 3-73. Remove seat.
   a. Remove seat retention screw (5).
   b. Slide seat (1) back to release from seat retention tab (3).
   c. Slide seat forward and lift above the fuel tank (2).
   d. Pull seat forward through seat strap (4).

Seat Retention Nut

1. See Figure 3-74. Remove seat retention nut.
   a. Hold nut (1).
   b. Remove clip (2).

Seat Strap

1. See Figure 3-75. Remove seat strap.
   a. Remove screws and washers (2-3).
   b. Remove strap (1).

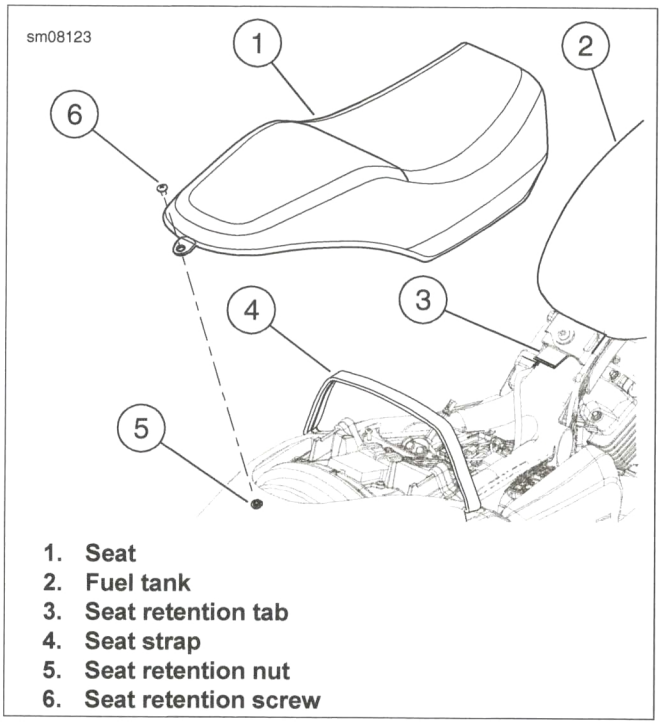

1. Seat
2. Fuel tank
3. Seat retention tab
4. Seat strap
5. Seat retention nut
6. Seat retention screw

Figure 3-73. Seat Removal

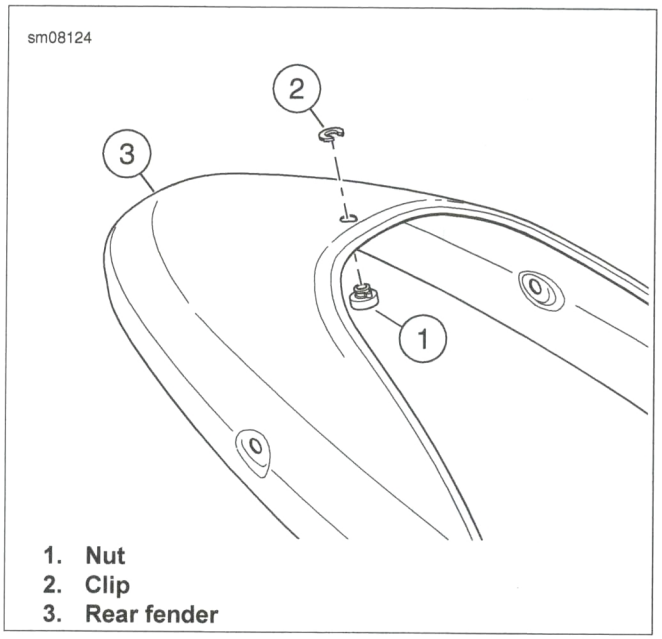

1. Nut
2. Clip
3. Rear fender

Figure 3-74. Seat Rentention Nut

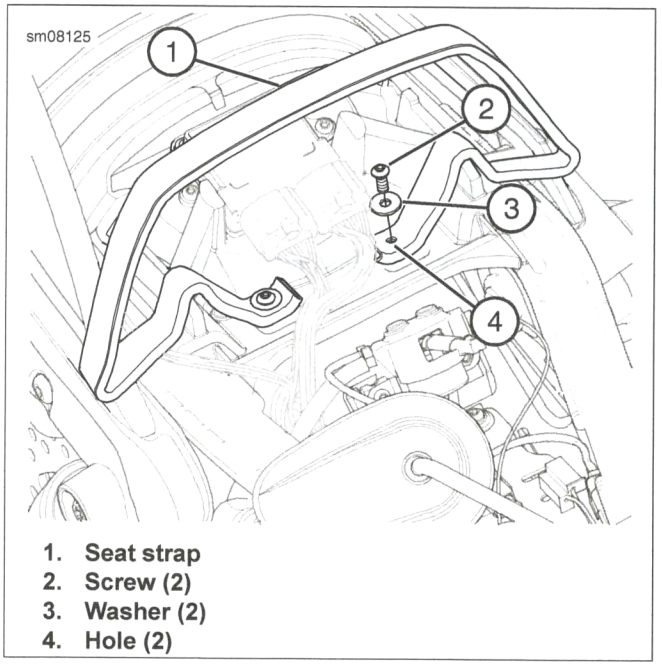

1. Seat strap
2. Screw (2)
3. Washer (2)
4. Hole (2)

Figure 3-75. Seat Strap

INSTALL

FASTENER	TORQUE VALUE	
Seat retention screw	2.3-4.5 Nm	21-39 **in-lbs**
Seat strap screw	9.0-11.0 Nm	80-97 **in-lbs**

Seat

⚠WARNING

After installing seat, pull upward on seat to be sure it is locked in position. While riding, a loose seat can shift causing loss of control, which could result in death or serious injury. (00070b)

1. See Figure 3-73. Install seat.
   a. Insert rear of seat (1) through seat strap (4).
   b. Slide seat forward and on to seat retention tab (3).
   c. Install seat retention screw (5). Tighten to 2.3-4.5 Nm (21-39 **in-lbs**).

Seat Retention Nut

1. See Figure 3-74. Install seat retention nut.
   a. Align nut (1) with hole in rear fender (3).
   b. Insert nut through rear fender.
   c. Install clip (2).

Seat Strap

1. See Figure 3-75. Install seat strap.
   a. Align strap (1) as shown.
   b. Install screws and washers (2-3) though holes (4) in strap. Tighten to 9.0-11.0 Nm (80-97 **in-lbs**).

REMOVE

1. See Figure 3-76. Remove jiffy stand.
   a. Remove spring (2).
   b. Remove cam (3) from left footpeg mount (6).
   c. Remove E-clip (5).
   d. Remove cam stop pin (4) and jiffy stand (1).

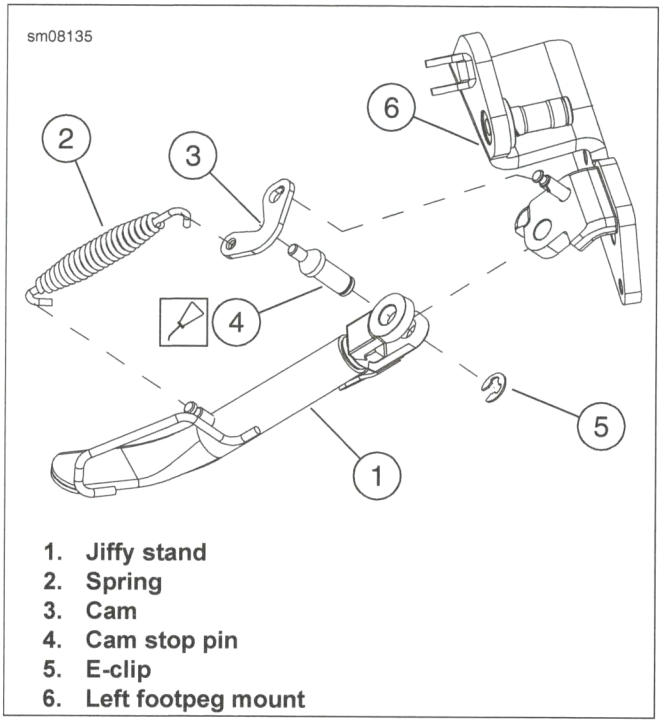

1. **Jiffy stand**
2. **Spring**
3. **Cam**
4. **Cam stop pin**
5. **E-clip**
6. **Left footpeg mount**

Figure 3-76. Jiffy Stand

INSTALL

1. See Figure 3-76. Install jiffy stand.
   a. Align jiffy stand (3) to left footpeg mount (6).
   b. Insert cam stop pin (4).
   c. Install E-clip (5).
   d. Orient cam (3) over cam stop pin as shown. Install on left footpeg mount.
   e. Install spring (2).

CLEAN AND INSPECT

1. Clean all parts thoroughly.
2. Inspect jiffy stand.
   a. Inspect cam stop pin for wear. Replace as necessary.
   b. Lubricate cam stop pin with SPECIAL PURPOSE GREASE.
   c. Inspect jiffy stand for wear. Replace as necessary.
   d. Inspect left footpeg mount for wear. Replace as necessary. See 3.34 RIDER FOOT CONTROLS.

SUBJECT	PAGE NO.
4.1 FASTENER TORQUE VALUES	4-1
4.2 SPECIFICATIONS	4-3
4.3 ENGINE OIL FLOW	4-7
4.4 BREATHER OPERATION	4-9
4.5 OIL PRESSURE	4-10
4.6 TROUBLESHOOTING	4-11
4.7 FRONT ENGINE MOUNT	4-16
4.8 REAR ENGINE MOUNT	4-19
4.9 REPLACE ENGINE	4-20
4.10 REBUILD ENGINE	4-23
4.11 INTAKE ADAPTER	4-27
4.12 CYLINDER HEAD COVERS	4-28
4.13 CAMSHAFT SPROCKET AND TIMING CHAIN	4-30
4.14 CYLINDER HEADS	4-34
4.15 ROCKER ARMS	4-36
4.16 CAMSHAFT ASSEMBLY	4-38
4.17 VALVES	4-39
4.18 CHAIN GUIDE	4-41
4.19 CYLINDERS	4-43
4.20 PISTONS	4-45
4.21 ALTERNATOR COVER	4-48
4.22 CLUTCH COVER	4-50
4.23 BALANCER	4-52
4.24 CRANKSHAFT GEAR	4-54
4.25 STARTER GEAR	4-55
4.26 OIL PUMP	4-56
4.27 OIL STRAINER	4-58
4.28 CRANKCASE ASSEMBLY	4-59
4.29 MAIN BEARINGS	4-61
4.30 CRANKCASE OIL NOZZLES	4-63
4.31 OIL PASSAGE PLUGS	4-64
4.32 CRANKSHAFT AND CONNECTING RODS	4-66

NOTES

FASTENER TORQUE VALUES IN THIS CHAPTER

The table below lists torque values for all fasteners presented in this chapter.

FASTENER	TORQUE VALUE		NOTES
Alternator access cover screws	10.0-12.0 Nm	89-106 **in-lbs**	4.21 ALTERNATOR COVER, Assemble
Alternator cover screws	10.0-12.0 Nm	89-106 **in-lbs**	4.21 ALTERNATOR COVER, Install
Alternator stator screws	10.0-12.0 Nm	89-106 **in-lbs**	4.21 ALTERNATOR COVER, Assemble
Baffle plate screw	3.0-5.0 Nm	27-44 **in-lbs**	4.12 CYLINDER HEAD COVERS, Assemble
Balancer bearing retainer screws	10.0-12.0 Nm	89-106 **in-lbs**	4.23 BALANCER, Install/Apply LOCTITE 243 MEDIUM STRENGTH THREADLOCKER AND SEALANT (blue).
Balancer shaft nut	160.0-170.0 Nm	118-126 ft-lbs	4.23 BALANCER, Install
Camshaft bolt	40.0-44.0 Nm	30-32 ft-lbs	4.13 CAMSHAFT SPROCKET AND TIMING CHAIN, Install
Camshaft retainer plate screw	10.0-12.0 Nm	89-106 **in-lbs**	4.15 ROCKER ARMS, Install
Cam sprocket bolt	40-44 Nm	29.5-32.4 lb-ft	4.13 CAMSHAFT SPROCKET AND TIMING CHAIN, Camshaft Sprocket, Timing Chain and Cam Timing
Cam sprocket bolt	40-44 Nm	29.5-32.4 lb-ft	4.13 CAMSHAFT SPROCKET AND TIMING CHAIN, Camshaft Sprocket, Timing Chain and Cam Timing
Cam sprocket bolt	40-44 Nm	29.5-32.4 lb-ft	4.13 CAMSHAFT SPROCKET AND TIMING CHAIN, Camshaft Sprocket, Timing Chain and Cam Timing
Chain guide shoulder bolt	10-12 Nm	7.4-8.9 lb-ft	4.13 CAMSHAFT SPROCKET AND TIMING CHAIN, Camshaft Sprocket, Timing Chain and Cam Timing
Chain guide shoulder bolt	10-12 Nm	7.4-8.9 lb-ft	4.13 CAMSHAFT SPROCKET AND TIMING CHAIN, Camshaft Sprocket, Timing Chain and Cam Timing
Chain guide shoulder bolt	10-12 Nm	7.4-8.9 lb-ft	4.13 CAMSHAFT SPROCKET AND TIMING CHAIN, Camshaft Sprocket, Timing Chain and Cam Timing
Clutch cover screws	10.0-12.0 Nm	89-106 **in-lbs**	4.22 CLUTCH COVER, Install/See procedure for torque sequence.
Connecting rod screws (first torque)	19-23 Nm	14-16 ft-lbs	4.32 CRANKSHAFT AND CONNECTING RODS, Assemble/Lubricate threads with engine oil
Connecting rod screws (second torque)	85-95 degrees	85-95 degrees	4.32 CRANKSHAFT AND CONNECTING RODS, Assemble
Coolant sleeve screw	10.0-12.0 Nm	89-106 **in-lbs**	4.19 CYLINDERS, Assemble
Crankcase M6 screws	10.0-12.0 Nm	89-106 **in-lbs**	4.28 CRANKCASE ASSEMBLY, Assemble/See torque sequence in procedure.
Crankcase M8 screws	20.0-25.0 Nm	15-18 lb-ft	4.28 CRANKCASE ASSEMBLY, Assemble/See torque sequence in procedure.
Crankshaft gear bolt	160.0-170.0 Nm	118-125 ft-lbs	4.24 CRANKSHAFT GEAR, Install
Crankshaft position sensor screws	10.0-12.0 Nm	89-106 **in-lbs**	4.21 ALTERNATOR COVER, Assemble

FASTENER	TORQUE VALUE		NOTES
Cylinder head bolt	50.0-54.0 Nm	37-39 ft-lbs	4.14 CYLINDER HEADS, Install/Apply ENGINE OIL to cylinder head bolt washers and threaded portion of the cylinder head bolts. See procedure for torque sequence.
Cylinder head cover bolt	10.0-12.0 Nm	89-106 **in-lbs**	4.12 CYLINDER HEAD COVERS, Install
Cylinder head flange bolt	20.0-25.0 Nm	15-18 ft-lbs	4.14 CYLINDER HEADS, Install/Apply ENGINE OIL to threaded portion of the cylinder head flange bolts. See procedure for torque sequence.
Intake adapter screw	10.0-12.0 Nm	89-106 **in-lbs**	4.11 INTAKE ADAPTER, Install
Lower front engine mount to engine screw	42.7-47.3 Nm	32-34 ft-lbs	4.7 FRONT ENGINE MOUNT, Install
Lower front engine mount to frame screw	22.0-29.0 Nm	17-21 ft-lbs	4.7 FRONT ENGINE MOUNT, Install
Oil filter adapter	20.0-25.0 Nm	15-18 ft-lbs	4.26 OIL PUMP, Install
Oil nozzle screw	10.0-12.0 Nm	89-106 **in-lbs**	4.30 CRANKCASE OIL NOZZLES, Install/Apply LOCTITE 246 MEDIUM STRENGTH THREAD-LOCKER AND SEALANT (blue).
Oil passage plug	20.0-25.0 Nm	15-18 ft-lbs	4.31 OIL PASSAGE PLUGS, Install/See procedure to verify plug location.
Oil pressure switch	10.0-12.0 Nm	89-106 **in-lbs**	4.31 OIL PASSAGE PLUGS, Install
Oil pressure test port plug	10.0-12.0 Nm	89-106 **in-lbs**	4.5 OIL PRESSURE, Oil Pressure Check
Oil pump housing screws	10.0-12.0 Nm	89-106 **in-lbs**	4.26 OIL PUMP, Install
Oil strainer cavity plug	20.0-25.0 Nm	15-18 ft-lbs	4.31 OIL PASSAGE PLUGS, Install
Oil strainer fasteners	10.0-12.0 Nm	89-106 **in-lbs**	4.27 OIL STRAINER, Install/Apply LOCTITE 243 MEDIUM STRENGTH THREADLOCKER AND SEALANT (blue).
Rear engine mount bolt, to engine	42.7-47.3 Nm	32-34 ft-lbs	4.8 REAR ENGINE MOUNT, Install
Rear engine mount screw, to frame	22.5-27.5 Nm	17-20 ft-lbs	4.8 REAR ENGINE MOUNT, Install
Restrictor plug	20.0-25.0 Nm	15-18 ft-lbs	4.31 OIL PASSAGE PLUGS, Install
Restrictor plug	20.0-25.0 Nm	15-18 ft-lbs	4.31 OIL PASSAGE PLUGS, Install
Shoulder bolt	10.0-12.0 Nm	89-106 **in-lbs**	4.18 CHAIN GUIDE, Install
Spring holder bolt	10.0-12.0 Nm	89-106 **in-lbs**	4.13 CAMSHAFT SPROCKET AND TIMING CHAIN, Install
Tensioner mounting bolts and spring tensioning bolt	10-12 Nm	7.4-8.9 lb-ft	4.13 CAMSHAFT SPROCKET AND TIMING CHAIN, Camshaft Sprocket, Timing Chain and Cam Timing
Tensioner mounting bolts and spring tensioning bolt	10-12 Nm	7.4-8.9 lb-ft	4.13 CAMSHAFT SPROCKET AND TIMING CHAIN, Camshaft Sprocket, Timing Chain and Cam Timing
Tensioner mounting bolts and spring tensioning bolt	10-12 Nm	7.4-8.9 lb-ft	4.13 CAMSHAFT SPROCKET AND TIMING CHAIN, Camshaft Sprocket, Timing Chain and Cam Timing
Timing chain tensioner screw	10.0-12.0 Nm	89-106 **in-lbs**	4.13 CAMSHAFT SPROCKET AND TIMING CHAIN, Install
Upper front engine mount screw, to engine	42.7-47.3 Nm	32-34 ft-lbs	4.7 FRONT ENGINE MOUNT, Install
Upper front engine mount screw, to frame	42.7-47.3 Nm	32-34 ft-lbs	4.7 FRONT ENGINE MOUNT, Install

ENGINE

Table 4-1. Engine

ITEM	XG500		XG750	
Number of cylinders	2			
Type	4-cycle, SOHC, 60 degree V-Type, liquid cooled			
Bore	69 mm	2.72 in	85 mm	3.35 in
Stroke	66 mm	2.6 in	66 mm	2.6 in
Piston displacement	500 cc	30 in^3	749 cc	46 in^3
Engine rev limiter speed	8000 rpm			
Idle speed	1200 rpm			
Engine and transmission weight	71.2 kg	157 lbs	70.3 kg	155 lbs

Table 4-2. Oil Pump

ITEM	XG500	XG750
Type	Gerotor, internal oil pump, wet sump	
Pressure	207-552 kPa (30-80 psi) at 3000 rpm Normal operating temperature of 70 °C (158 °F)	
Filtration	Spin-on oil filter	

Table 4-3. Water Pump

ITEM	XG500	XG750
Type	Impeller-type, thermostat controlled bypass	

Table 4-4. Valve Diameter

ITEM	XG500	XG750
Intake	27.0 +/- 0.1 mm (1.06 +/- 0.004 in)	34.20 +/- 0.1 mm (1.34 +/- 0.004 in)
Exhaust	23.0 +/- 0.1 mm (0.90 +/- 0.004 in)	28.90 +/- 0.1 mm (1.13 +/- 0.004 in)

Table 4-5. Valve Lash

ITEM	XG500		XG750	
Intake	0.13-0.18 mm	0.005-0.007 in	0.15-0.20 mm	0.006-0.008 in
Exhaust	0.18-0.23 mm	0.007-0.009 in	0.20-0.25 mm	0.008-0.01 in

Table 4-6. Cylinder Heads

ITEM	XG500		XG750	
Valve guide in head (interference fit)	0.025-0.051 mm	0.001-0.002 in	0.025-0.051 mm	0.001-0.002 in
Valve seat in head (interference fit)	0.059-0.1 mm	0.002-0.004 in	0.075-0.12 mm	0.003-0.005 in
Valve guide I.D.	4.3-4.5 mm	0.169-0.177 in	4.3-4.5 mm	0.169-0.177 in

Table 4-6. Cylinder Heads

ITEM		XG500		XG750	
Valve stem diameter	Intake	4.868-4.882 mm	0.191-0.192 in	4.868-4.882 mm	0.191-0.192 in
	Exhaust	4.868-4.882 mm	0.191-0.192 in	4.868-4.882 mm	0.191-0.192 in
Valve to guide running clearance	Intake	0.018-0.047 mm	0.0007-0.0018 in	0.018-0.047 mm	0.0007-0.0018 in
	Exhaust	0.028-0.057 mm	0.0011-0.0022 in	0.028-0.057 mm	0.0011-0.0022 in
Valve seat runout		0.03 mm	0.001 in	0.03 mm	0.001 in
Valve seat to guide runout		0.05 mm	0.002 in	0.05 mm	0.002 in
Cylinder head flatness		0.05 mm	0.002 in	0.05 mm	0.002 in
Intake valve stem protrusion		40.84-41.21 mm	1.60-1.62 in	42.87-43.27 mm	1.68-1.70 in
Exhaust valve stem protrusion		42.43-42.83 mm	1.67-1.68 in	42.87-43.27 mm	1.68-1.70 in

Table 4-7. Valve Springs

ITEM	XG500		XG750	
Valve spring free length	nominal-40.0 mm	nominal-1.57 in	nominal-39.1 mm	nominal-1.53 in
Valve spring installed height	nominal-35.5 mm	nominal-1.39 in	nominal-35.5 mm	nominal-1.39 in
Spring force installed	158-182 N	35.51-40.91 lbf	198-222 N	44.51-49.90 lbf
Spring force compressed at 9 mm (0.35 in) lift	483.7-531.7 N	108.74-119.53 lbf	713-761 N	160.28-171.07 lbf

Table 4-8. Cam Drive

ITEM	XG500	XG750
Intake lobe peak lift angle (Front/Rear)	98/92 degrees ATDC	112/97 degrees ATDC
Exhaust lobe peak lift angle (Front/Rear)	114/90 degrees BTDC	113/100 degrees BTDC
Total intake lift	7.65 mm (0.30 in)	9.20 mm (0.36 in)
Duration, intake at 1 mm (0.39 in)	201.2 degree (Crank)	214.1 degree (Crank)
Total exhaust lift	8.31 mm (0.33 in)	9.15 mm (0.36 in)
Duration, exhaust at 1 mm (0.39 in)	225.4 degree (Crank)	220.4 degree (Crank)

Table 4-9. Piston Ring Gap

ITEM	XG500	XG750
Top ring gap (maximum)	0.350 mm (0.0137 in)	0.350 mm (0.0137 in)
Top ring gap (minimum)	0.200 mm (0.007 in)	0.200 mm (0.007 in)
Second ring gap (maximum)	0.550 mm (0.0216 in)	0.550 mm (0.0216 in)
Second ring gap (minimum)	0.350 mm (0.0137 in)	0.350 mm (0.0137 in)
Oil control ring gap (maximum)	0.700 mm (0.0275 in)	0.700 mm (0.0275 in)
Oil control ring gap (minimum)	0.200 mm (0.007 in)	0.200 mm (0.007 in)
Top ring side clearance (maximum)	0.045 mm (0.0017 in)	0.045 mm (0.0017 in)
Top ring side clearance (minimum)	0.025 mm (0.0009 in)	0.025 mm (0.0009 in)
Second ring side clearance (maximum)	0.070 mm (0.0027 in)	0.070 mm (0.0027 in)
Second ring side clearance (minimum)	0.050 mm (0.0019 in)	0.050 mm (0.0019 in)

Table 4-10. Connecting Rod and Piston

ITEM	XG500		XG750	
Rod small end bore diameter	20.015-20.025 mm	0.7879-0.7883 in	20.015-20.025 mm	0.7879-0.7883 in
Piston pin diameter	19.995-20.000 mm	0.7872-0.7873 in	19.995-20.000 mm	0.7872-0.7873 in
Running clearance	0.015-0.030 mm	0.0005-0.0011 in	0.015-0.030 mm	0.0005-0.0011 in

Table 4-11. Balance Shaft and Crankcase

ITEM	XG500	XG750
Case bearing bore - right side balance shaft	51.965 mm (2.045 in)	51.965 mm (2.045 in)
Case bearing bore - left side balance shaft	54.965 mm (2.163 in)	54.965 mm (2.163 in)
Case bearing bore - right side transmission input	61.965 mm (2.439 in)	61.965 mm (2.439 in)
Case bearing bore - left side transmission input	41.971 mm (1.652 in)	41.971 mm (1.652 in)
Case bearing bore - right side transmission output	41.971 mm (1.652 in)	41.971 mm (1.652 in)
Case bearing bore - left side transmission output	61.965 mm (2.439 in)	61.965 mm (2.439 in)

Table 4-12. Connecting Rod Journals

ITEM		XG500		XG750	
Rod bearing journal	A	42.974-42.982 mm	1.6918-1.6922 in	42.974-42.982 mm	1.6918-1.6922 in
	B	42.982-42.990 mm	1.6918-1.6925 in	42.982-42.990 mm	1.6918-1.6925 in
Rod bearing bore without bearing	A	46.000-46.008 mm	1.8110-1.8113 in	46.000-46.008 mm	1.8110-1.8113 in
	B	46.008-46.016 mm	1.8113-1.8116in	46.008-46.016 mm	1.8113-1.8116 in
Rod bearing bore with bearing	A - Journal	43.004-43.036 mm	1.6930-1.6943 in	43.004-43.036 mm	1.6930-1.6943 in
	B - Journal	43.012-43.044 mm	1.6933-1.6946 in	43.012-43.044 mm	1.6933-1.6946 in
Running clearance		0.030-0.054 mm	0.0011-0.0021 in	0.030-0.054 mm	0.0011-0.0021 in
Axial end play		0.17-0.37 mm	0.006-0.014 in	0.17-0.37 mm	0.006-0.014 in

Table 4-13. Crankshaft and Crankcase

ITEM		XG500		XG750	
Main crankshaft journal		44.965-44.980 mm	1.7702-1.7708 in	44.965-44.980 mm	1.7702-1.7708 in
Crankcase main bearing bore with shells		44.994-45.006 mm	1.7714-1.7718 in	44.994-45.006 mm	1.7714-1.7718 in
Running clearance		0.014-0.041 mm	0.0055-0.0161 in	0.014-0.041 mm	0.0055-0.0161 in
Crankcase main bearing bore without shells	Grade A - Blue	49.016-49.010 mm	1.9297-1.9295 in	49.016-49.010 mm	1.9297-1.9295 in
	Grade B - Black	49.022-49.016 mm	1.9300-1.9297 in	49.022-49.016 mm	1.9300-1.9297 in
	Grade C - Red	49.028-49.022 mm	1.9302-1.9300 in	49.028-49.022 mm	1.9302-1.9300 in
Axial end play		0.10-0.35 mm	0.0039 in-0.01377	0.10-0.35 mm	0.0039 in-0.01377

SERVICE WEAR LIMITS

Table 4-14. Piston and Cylinder Liner

ITEM	Replace if Wear Exceeds	
	XG500	XG750
Cylinder liner inner diameter bore (freestate)	69.03 mm (2.7177 in)	85.03 mm (3.3476 in)
Cylinder liner out of round (freestate)	0.02 mm (0.0007 in)	0.02 mm (0.0007 in)

Table 4-14. Piston and Cylinder Liner

ITEM	Replace if Wear Exceeds	
	XG500	XG750
Piston major diameter	68.93 mm (2.7137 in)	84.92 mm (3.3432 in)
Running clearance	0.06 (0.0023 in) max	0.07 (0.0027 in) max

Table 4-15. Compression and Leakage

ITEM	Investigate if Value Is Below	
	XG500	XG750
Compression (dry) Wide Open Throttle	160 psi (1103 kPa)	
Leakage (dry) at 100 psi (689 kPa)	15%	

OPERATION

Main Oil Distribution

1. See Figure 4-1. Engine oil flows to:
   a. Oil pickup (10).
   b. Oil pump (11).
   c. Oil filter (9).
   d. Right main bearing (13), left main bearing (6) and oil passage (7).
2. Oil switch (8) senses oil pressure at oil passage (7).

Left Side Oil Distribution

1. Oil flows through left main bearing (6) to:

- Crank pin (14).
- Front piston cooling jet (5).
- Rear cylinder cam shaft (2).

2. Oil flows through rear cylinder cam shaft (2) to:
   a. Rear cylinder rocker arm shafts (1).
   b. Drain oil flows through timing chain cavity to oil pan.
3. Oil flows through oil passage (7) to:
   a. Transmission input shaft (12).
   b. Input shaft gears and clutch.
   c. Drain oil to oil pan.

Right Side Oil Distribution

1. Oil flows through right main bearing (13) to:

- Crank pin (14).
- Rear piston cooling jet (15).
- Transmission output shaft (16).
- Front cylinder cam shaft (4).

1. Oil flows through transmission output shaft (16) to:
   a. Output shaft gears.
   b. Drain oil to oil pan.
2. Oil flows through front cylinder cam shaft (4) to:
   a. Front cylinder rocker arm shafts (3).
   b. Drain oil flows through timing chain cavity to oil pan.

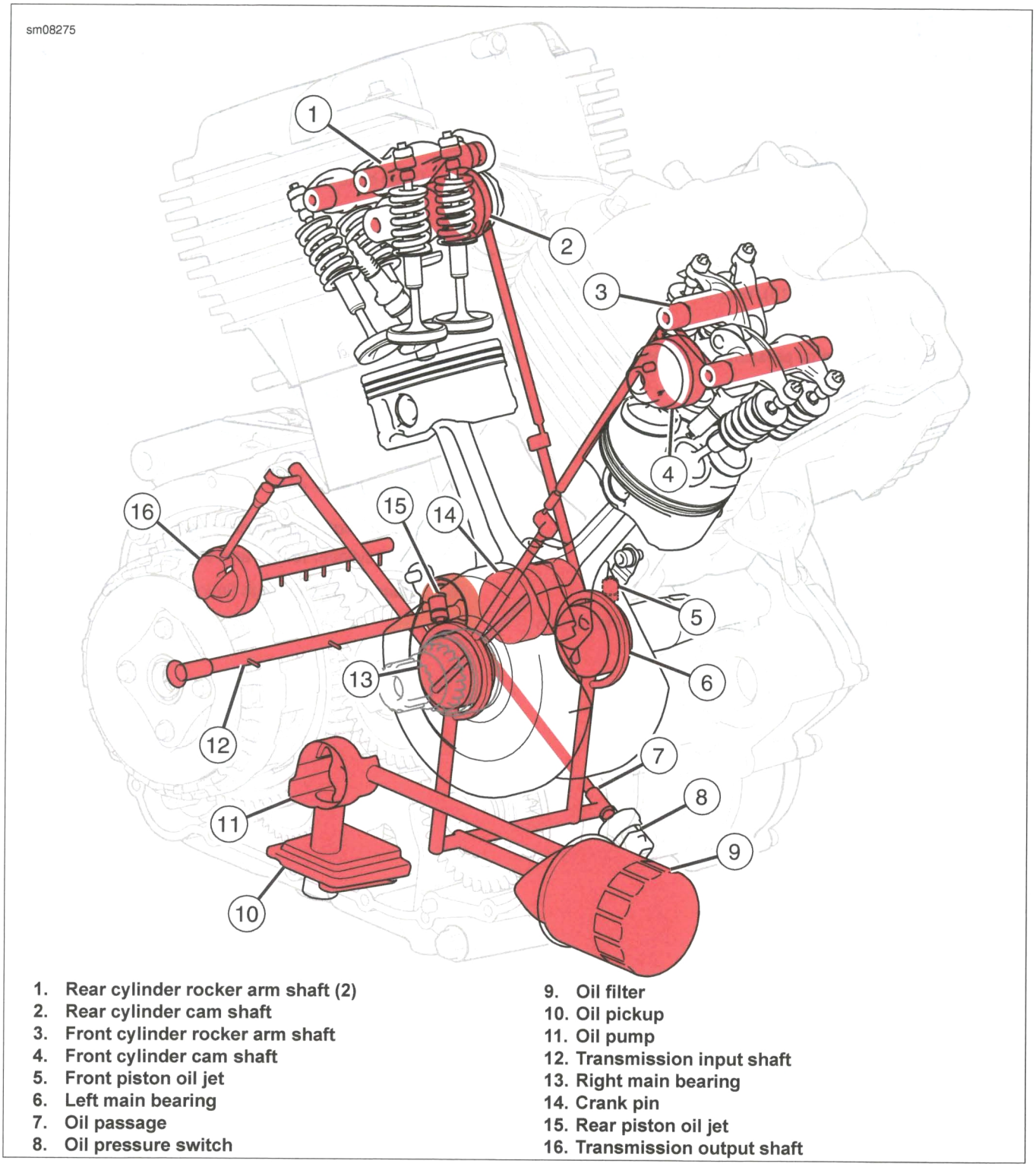

1. Rear cylinder rocker arm shaft (2)
2. Rear cylinder cam shaft
3. Front cylinder rocker arm shaft
4. Front cylinder cam shaft
5. Front piston oil jet
6. Left main bearing
7. Oil passage
8. Oil pressure switch
9. Oil filter
10. Oil pickup
11. Oil pump
12. Transmission input shaft
13. Right main bearing
14. Crank pin
15. Rear piston oil jet
16. Transmission output shaft

Figure 4-1. Engine Oil Flow

GENERAL

Operation

See Figure 4-2. The crankcase is vented to prevent a buildup of pressure caused by the downward force of the pistons.

The breather system sends crankcase vapors, via the timing chain opening (5), to the induction module (1). The vapors mix with the intake air. Then they are burned during normal combustion.

Flow

1. See Figure 4-2. Fuel vapor flows through:
   a. Timing chain opening (5).
   b. Baffle (4).
   c. Outlet from cylinder head cover (3).
   d. Breather hose (2)
   e. Inlet to induction module (1).

NOTE

Baffle (4) restricts oil spray from entering the hoses to the induction module.

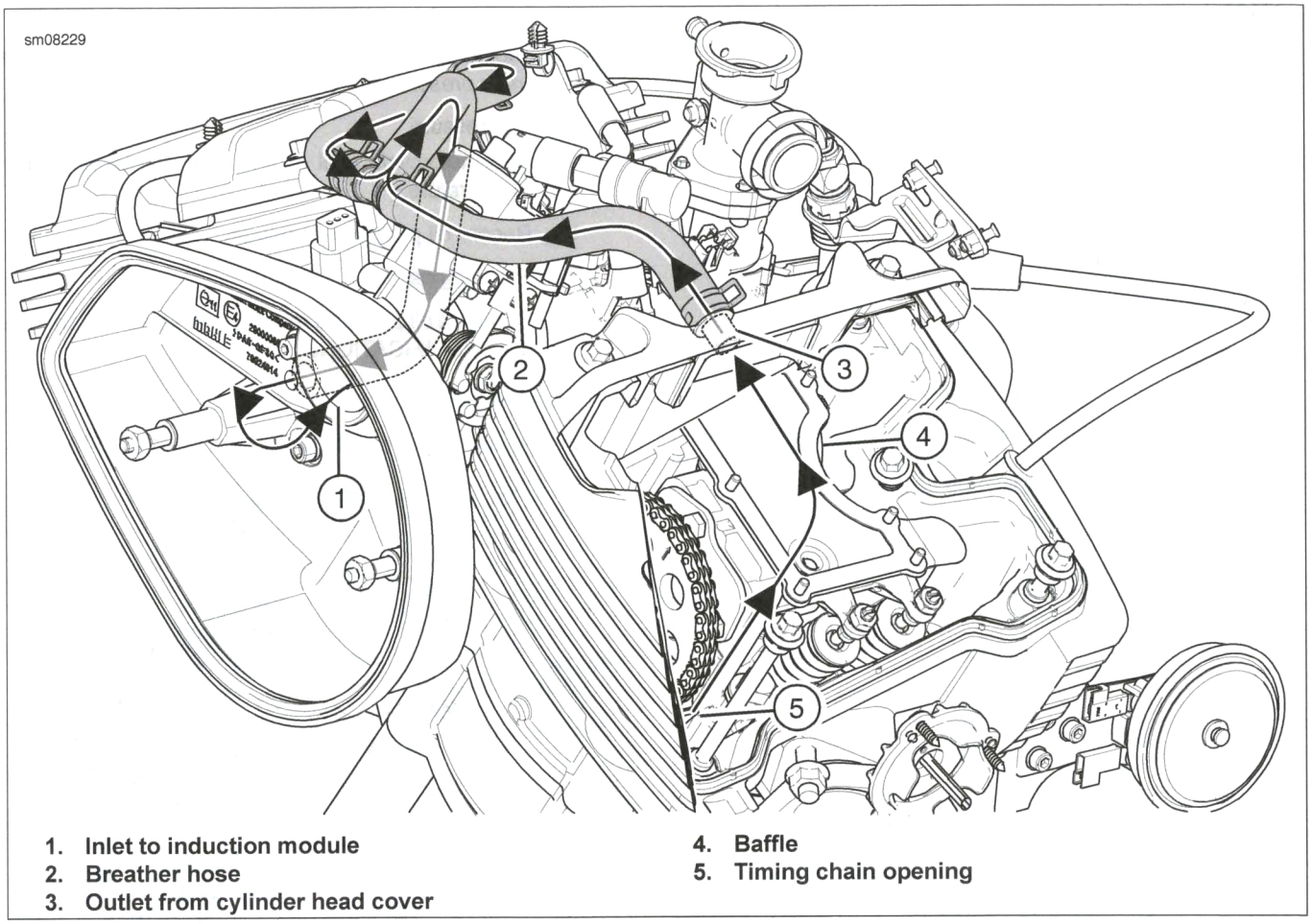

1. **Inlet to induction module**
2. **Breather hose**
3. **Outlet from cylinder head cover**
4. **Baffle**
5. **Timing chain opening**

Figure 4-2. Breather Operation

OPERATION

See Figure 4-3. The red OIL PRESSURE indicator lamp illuminates to indicate improper circulation of the engine oil. The indicator illuminates when the ignition is turned on (before the engine is started), but normally extinguishes once the engine is running.

NOTICE

If the oil pressure indicator lamp remains lit, always check the oil supply first. If the oil supply is normal and the lamp is still lit, stop the engine at once and do not ride further until the trouble is located and the necessary repairs are made. Failure to do so may result in engine damage. (00157a)

If the lamp remains illuminated, check the following:

- Low oil level
- Diluted oil supply or incorrect oil viscosity
- Faulty lamp wiring
- Faulty oil pressure switch
- Damaged oil pump
- Plugged oil filter element
- Inoperative or weak spring in the oil pressure relief valve
- Damaged or incorrectly installed O-rings in the engine

To troubleshoot the issue, always check the engine oil level first. If the oil level is within proper range, check oil pressure. See 4.6 TROUBLESHOOTING for oil pressure test.

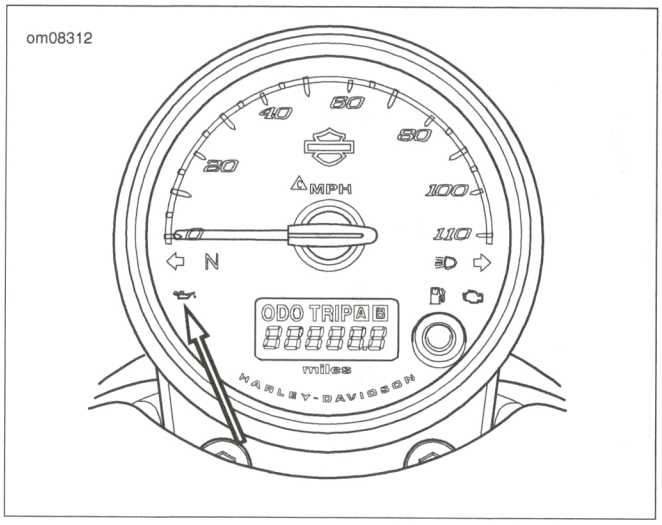

Figure 4-3. Oil Pressure Indicator Lamp

OIL PRESSURE CHECK

PART NUMBER	TOOL NAME
HD-45308	OIL PRESSURE GAUGE

FASTENER	TORQUE VALUE	
Oil pressure test port plug	10.0-12.0 Nm	89-106 **in-lbs**

1. Fill crankcase to proper level.
2. Figure 4-4. Remove plug.
3. Attach OIL PRESSURE GAUGE (Part No. HD-45308) with appropriate adapter to oil pressure test port.

NOTE

After an engine rebuild, remove fuel pump fuse to verify that oil pressure is present before engine starts.

4. Test oil pressure.
   a. Run motorcycle until engine is at normal operating temperature.
   b. Record oil pressure on gauge.
   c. Stop engine.
   d. Compare oil pressure reading with specification. See 4.2 SPECIFICATIONS.
5. Remove test equipment.
6. Install plug. Tighten to 10.0-12.0 Nm (89-106 **in-lbs**).

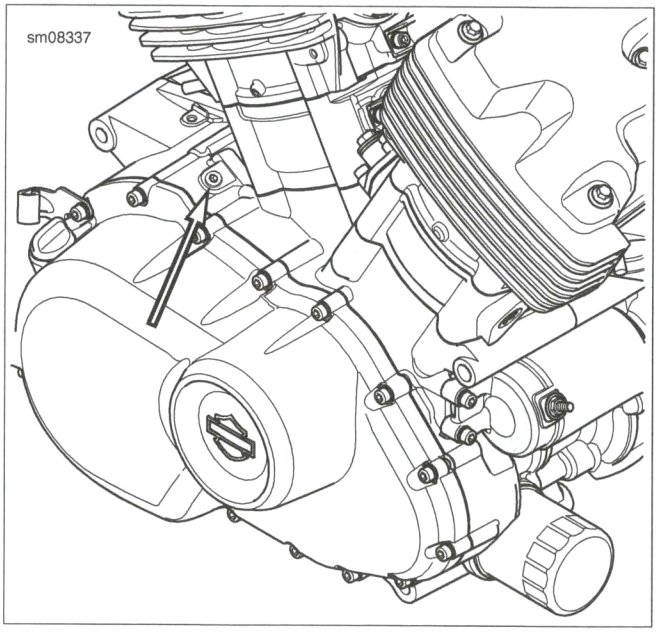

Figure 4-4. Oil Pressure Test Port

COMPRESSION TEST

PART NUMBER	TOOL NAME
HD-33223-1	CYLINDER COMPRESSION GAUGE

Combustion chamber leakage may cause performance issues. A compression test can help determine the source of cylinder leakage.

NOTE

Note gauge readings at the end of the first and last compression strokes.

1. Perform compression test on front cylinder.
   a. Run engine to normal operating temperature.
   b. Remove spark plugs. See 2.26 REPLACE SPARK PLUGS.
   c. Connect CYLINDER COMPRESSION GAUGE (Part No. HD-33223-1) to front cylinder.
   d. Verify transmission is in NEUTRAL.
   e. Twist on and hold throttle to fully open throttle plate.
   f. Crank engine continuously through five to seven full compression strokes. Record test results.
2. Perform compression test on rear cylinder.
3. Review test results.
   a. Compare to specifications. Refer to Table 4-15.
   b. Final compression reading should have no more than a ten percent variance between front and rear cylinders.
   c. If compression of a cylinder does not fall within its upper and lower limits, refer to Table 4-16.
4. Verify worn piston rings.
   a. Inject approximately 15 ml (0.5 oz) engine oil into each cylinder.
   b. Repeat the compression tests on both cylinders.
      Readings that are considerably higher during the second test indicate worn piston rings.
5. Verify that throttle plate is in the closed position.
6. Install spark plugs. See 2.26 REPLACE SPARK PLUGS.

Table 4-16. Compression Test Results

TEST RESULTS	DIAGNOSIS
Compression low on first stroke, builds up on the following strokes, but does not reach normal. Improves considerably when oil is added to cylinder.	Ring trouble
Compression low on first stroke, does not build up much on following strokes. Does not improve considerably with the addition of oil. Verify valve lash.	Valve trouble
Same results as valve trouble.	Head gasket leak

SMOKING ENGINE OR HIGH OIL CONSUMPTION

Perform the Compression Test. See 4.6 TROUBLESHOOTING, Compression Test.

If engine is consuming oil, add engine oil dye and run engine prior to disassembly. This will help determine if porosity is present in the cylinder head or exhaust port cavity.

If further testing is needed, remove the suspect cylinder heads and inspect the following:

Check Prior to Cylinder Head Removal:

- Crankcase overfilled
- Oil carryover
- Breather hose restricted
- Restricted oil filter

Check After Cylinder Head Removal:

- Valve guide seals
- Valve guide to valve stem clearance
- Gasket surface of both head and cylinder
- Cylinder head casting's porosity allowing oil to drain into combustion chamber
- Piston/ring failure

OIL PRESSURE TEST

1. Perform oil pressure check. See 8.15 OIL PRESSURE SWITCH.
2. Start engine and test oil pressure switch for proper operation. Check oil pressure switch for leaks.

Table 4-17. Troubleshooting Oil Pressure Signal Lamp

OIL PRESSURE INDICATOR LAMP	PROBABLE CAUSES
Stays on at speeds above idle	Empty oil reservoir
	Grounded oil switch wire
	Malfunctioning signal switch
	Diluted oil
	Malfunctioning or improperly installed pressure relief valve
	Oil strainer clogged
Flickers at idle	Incorrect idle speed
	Malfunctioning or improperly installed pressure relief valve
Does not illuminate when ignition is turned on (prior to engine start)	Malfunctioning signal switch
	Malfunction in wiring
	Burned out signal bulb
	Dead battery

Table 4-18. Troubleshooting: Engine Noise or Vibration

CONDITION	CHECK	REMEDY
Engine vibrates	Loose engine mounts	Secure engine mounts.
	Worn bearing or bearing seat	Replace bearing or worn component.
	Incorrect balancer shaft timing	Properly set balancer shaft timing.
Excessive noise while cranking	Worn starter motor teeth, friction clutch or freewheel gear	Replace starter motor, friction clutch or freewheel gear.
	Inoperative or damaged chain tensioner	Noise disappears after engine started when oil pressure is available.
Excessive noise from valve train area	Valve clearance below specification	Adjust valve clearance.
	Inoperative or damaged chain tensioner	Replace chain tensioner.
	Worn camshaft or camshaft brackets	Replace camshafts and/or brackets.
	Worn camshaft drive or camshaft sprockets and camshaft gears loose	Tighten or replace camshaft gears or camshaft sprocket.
	Worn camshaft chain, chain guide or chain tension guide	Replace camshaft chain, chain guide or chain tension guide.
Excessive noise from piston area	Worn piston or cylinder	Replace piston or cylinder.
	Worn piston pin bore or piston pin	Replace piston and/or piston pin.
	Worn piston rings grooves or damaged piston rings	Replace piston and/or piston rings.

Table 4-19. Troubleshooting: Engine Does Not Crank, Cranks But Does Not Start or Starts Hard

CONDITION	CHECK	REMEDY
Engine cranks but does not start or starts hard	Loose spark plugs	Tighten spark plugs.
	Incorrect or worn spark plugs	Replace spark plugs.
	Fouled or wet spark plugs	Clean or replace spark plugs.
	Discharged battery, cranking rpm too low	Check/replace battery, connections and charging system.
	Inadequate fuel supply	Check fuel level in tank, add if necessary. Check/replace fuel filter, fuel supply lines, fuel pump, fuel pressure sensor and fuel injectors.
	Improper valve clearance	Adjust valve clearance.
	Incorrect valve timing	Adjust position of camshaft gears and camshaft sprocket.
	Inoperative or damaged ignition coil(s)	Replace ignition coil(s).
	Inoperative or damaged CKP or ECM	Check/replace CKP and/or ECM.
	Leaking cylinder head gasket(s)	Replace cylinder head gasket(s).
	Valve and/or valve guides worn or imperfect valve seat	Replace valves, rework valve seats or replace cylinder head if necessary.
	Worn piston rings and/or cylinder bore	Replace piston rings and cylinders if necessary.
	Improper viscosity oil for ambient temperature conditions	Change engine oil and refill with correct viscosity oil for ambient temperature.

Table 4-20. Troubleshooting: Engine Performance

CONDITION	CHECK	REMEDY
Engine runs irregularly at idle	Excessive spark plug electrode gap	Set gap properly or replace spark plugs.
	Valve clearance below specification	Adjust valve clearance.
	Intake air leak	Tighten intake flange, replace gasket or replace intake flange if necessary.
	Malfunctioning ignition unit or incorrect ignition timing	Check CKP and ECM, replace if necessary.
	Valve and/or valve guides worn or imperfect valve seat	Replace valves, rework valve seats or replace cylinder head if necessary.
Engine runs irregularly at higher speed	Fuel pressure too low	Check fuel pressure sensor, fuel pump and fuel supply.
	Intake air leak	Tighten intake flange, replace gasket or replace intake flange if necessary.
	Worn camshafts	Check and replace if necessary.

Table 4-20. Troubleshooting: Engine Performance

CONDITION	CHECK	REMEDY
Insufficient engine performance	Intake air leak	Tighten intake flange, replace gasket or replace intake flange if necessary.
	Incorrect or worn spark plugs	Replace spark plugs.
	Improper valve clearance	Adjust valve clearance.
	Incorrect valve timing	Adjust position of camshaft gears and camshaft sprocket.
	Insufficient ignition voltage	Check/replace ignition coil(s).
	Inoperative or damaged CKP or ECM	Check/replace CKP and/or ECM.
	Valve and/or valve guides worn or imperfect valve seat	Replace valves, rework valve seats or replace cylinder head if necessary.
	Inadequate fuel supply	Check fuel level in tank, add if necessary. Check/replace fuel filter, fuel supply lines, fuel pump and fuel injectors.
	Restricted air filter	Replace air filter.
	Restricted exhaust system	Replace restricted exhaust system components.
	Worn piston rings and/or cylinder bore	Replace piston rings and cylinders if necessary.
	Incorrect or contaminated engine oil	Change engine oil and refill with correct viscosity oil for ambient temperature.
Engine knocks or pings	Fuel has octane rating that is too low	Use correct octane fuel.
	Incorrect or worn spark plugs	Replace spark plugs.
	Intake air leak	Tighten intake flange, replace gasket or replace intake flange if necessary.
	Malfunctioning ignition unit or incorrect ignition timing	Check CKP and ECM, replace if necessary.
Engine overheats	• Low coolant level • Cooling system leaking • Air in cooling system	Refill coolant, pressure test cooling system.
	Inoperative cooling fan motor	Replace cooling fan motor.
	Low engine oil	Fill engine oil to the proper level.
	Debris in radiator fins	Remove debris from radiator(s).
	Malfunctioning thermostat	Replace thermostat.
	Malfunctioning ignition unit or incorrect ignition timing	Check CKP and ECM, replace if necessary.
	Inoperative coolant pump or coolant pump drive	Replace coolant pump and/or coolant water pump drive.
	Inoperative oil pump or oil pump drive Damaged or improperly installed oil pump drive gear retaining ring Restricted oil circuit	Replace oil pump and/or oil pump drive components. Install oil pump drive gear retaining ring. Clean oil circuit.
	Leaking cylinder head gasket(s)	Replace cylinder head gasket(s).
	Intake air leak	Tighten intake flange, replace gasket or replace intake flange if necessary.
Engine coolant temperature too low	Malfunctioning thermostat	Replace thermostat.

Table 4-21. Troubleshooting: Engine Lubrication System

CONDITION	CHECK	REMEDY
Blue smoke from exhaust or engine uses too much oil	Engine oil overfilled (oil in air cleaner assembly)	Adjust engine oil to proper level.
	Leaking cylinder head gasket(s)	Replace cylinder head gasket(s).
	Valve stem seals leaking	Replace valve stem seals.
	Clutch hydraulic piston, secondary actuator cover piston bore or O-rings leaking	Replace piston, O-rings and/or secondary actuator cover if necessary.
	Engine oil contaminated with fuel, worn piston rings and/or cylinder bore(s)	Replace piston rings and/or cylinder(s).
	Engine oil contaminated with fuel, engine does not regularly reach normal operating temperature (short trips)	Operate vehicle for long distances in between short trips.
Engine oil quantity increases	Engine oil contaminated with fuel, engine does not regularly reach normal operating temperature (short trips)	Operate vehicle for long distances in between short trips.
	Engine oil contaminated with fuel, worn piston rings and/or cylinder bore(s)	Replace piston rings and/or cylinder(s).
Low or no engine oil pressure - oil pressure indicator lamp illuminates	Engine oil level low	Fill oil to proper level.
	Malfunctioning oil pressure switch	Replace oil pressure switch.
	Malfunctioning pressure retaining valve (bypass valve stuck in open position)	Check/replace pressure retaining valve.
	• Inoperative oil pump or oil pump drive • Damaged or improperly installed oil pump drive gear retaining ring • Restricted oil circuit	• Replace oil pump and/or oil pump drive components • Install oil pump drive gear retaining ring • Clean oil circuit
	Leaking ignition cover gasket (oil pressure circuit leaking internally)	Replace ignition cover gasket and torque to specifications.
	Worn oil pump	Replace oil pump.
	Engine oil contaminated with fuel, engine does not regularly reach normal operating temperature (short trips)	Operate vehicle for long distances in between short trips.
	Engine oil contaminated with fuel, worn piston rings and/or cylinder bore(s)	Replace piston rings and/or cylinder(s).
	Restricted oil strainer	Clean/replace oil strainer.
High engine oil pressure	Malfunctioning pressure retaining valve (bypass valve stuck in closed position)	Check/replace pressure retaining valve.
	Restricted oil circuit	Clean oil passages.

PREPARE

1. Remove main fuse. See 8.4 POWER DISCONNECT.
2. Remove exhaust system. See 6.18 EXHAUST SYSTEM.

REMOVE

PART NUMBER	TOOL NAME
HD-45968	FAT JACK

Lower

1. See Figure 4-5. Remove lower front engine mount.
   a. Support engine (8) using FAT JACK (Part No. HD-45968) or equivalent.
   b. Remove short screws (2).
   c. Remove right side foot control assembly (3).
   d. Remove the pushrod (4) from the rear brake master cylinder (5).
   e. Set aside right side foot control assembly.
   f. Remove long screw (7).
   g. Remove lower front engine mount (1).

Upper

1. Disconnect horn connectors. See 8.17 HORN
2. See Figure 4-6. Remove upper front engine mount.
   a. Support engine (5) using FAT JACK (Part No. HD-45968) or equivalent.
   b. Remove short screws (3).
   c. Set aside horn bracket assembly (6).
   d. Remove long screw (4).
   e. Remove upper front engine mount (2).

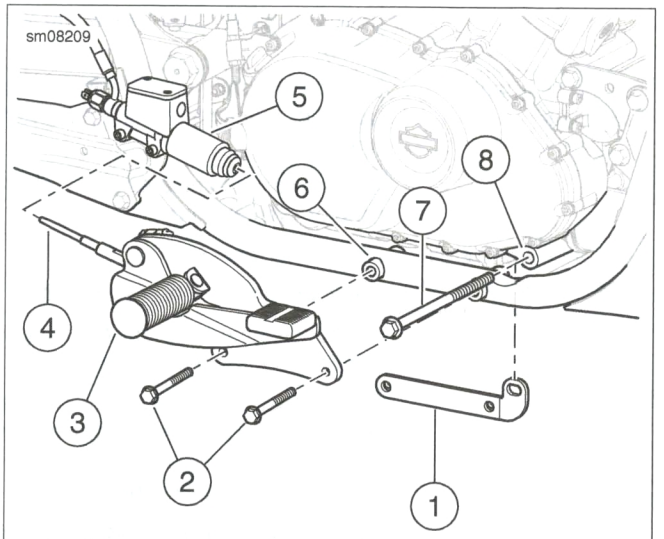

1. **Lower front engine mount**
2. **Short screw (2)**
3. **Right side foot control assembly**
4. **Pushrod**
5. **Rear brake master cylinder**
6. **Frame**
7. **Long screw**
8. **Engine**

Figure 4-5. Lower Front Engine Mount

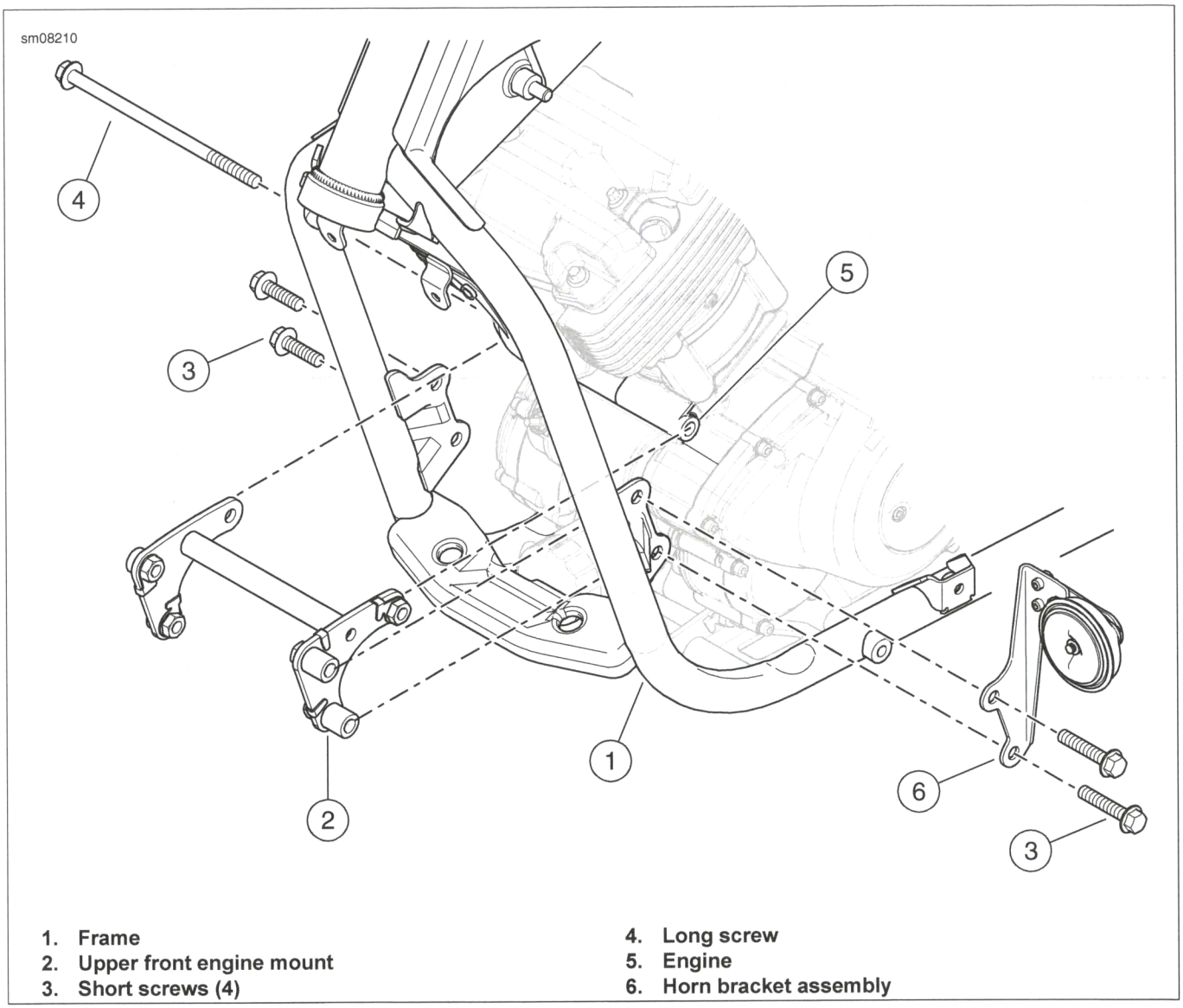

1. **Frame**
2. **Upper front engine mount**
3. **Short screws (4)**
4. **Long screw**
5. **Engine**
6. **Horn bracket assembly**

Figure 4-6. Upper Front Engine Mount

INSPECT

1. Check engine mounts.
   a. Check that all engine mount bolts and screws are tight.
   b. Check for cracks or damage. Verify that the mounts are supporting the weight of the engine. Replace as necessary.

INSTALL

FASTENER	TORQUE VALUE	
Lower front engine mount to frame screw	22.0-29.0 Nm	17-21 ft-lbs
Lower front engine mount to engine screw	42.7-47.3 Nm	32-34 ft-lbs
Upper front engine mount screw, to frame	42.7-47.3 Nm	32-34 ft-lbs
Upper front engine mount screw, to engine	42.7-47.3 Nm	32-34 ft-lbs

Lower

1. See Figure 4-5. Install lower front engine mount.
   a. Align lower front engine mount (1) between engine (8) and frame (6).
   b. Loosely install long screw (7).
   c. Install pushrod (4) to rear brake master cylinder (5).
   d. Insert short screws (2) though right side foot control assembly.
   e. Loosely install screws and right side foot control assembly to frame.
   f. Tighten short screws to 22.0-29.0 Nm (17-21 ft-lbs).
   g. Tighten long screw to 42.7-47.3 Nm (32-34 ft-lbs).

Upper

1. See Figure 4-6. Install upper front engine mount.
   a. Align upper front engine mount (2) to engine (5) and frame (1).
   b. Loosely install long screw (4).
   c. Insert two short screws (3) though horn bracket assembly (6).
   d. Loosely install short screws and horn bracket assembly to frame.
   e. Loosely install remaining short screws.
   f. Tighten short screws to 42.7-47.3 Nm (32-34 ft-lbs).
   g. Tighten long screw to 42.7-47.3 Nm (32-34 ft-lbs).
2. Connect horn connectors. See 8.17 HORN

COMPLETE

1. Install exhaust system. See 6.18 EXHAUST SYSTEM.
2. Install main fuse. See 8.4 POWER DISCONNECT.

PREPARE

1. Remove front belt guard. See 3.21 BELT GUARDS.
2. Disconnect negative battery cable. See 8.4 POWER DISCONNECT.

REMOVE

1. See Figure 4-7. Remove rear engine mount.
   a. Support engine.
   b. Remove screws (4).
   c. Remove bolts (5).
   d. Remove rear engine mount (3).
   e. Remove flag nuts (6).

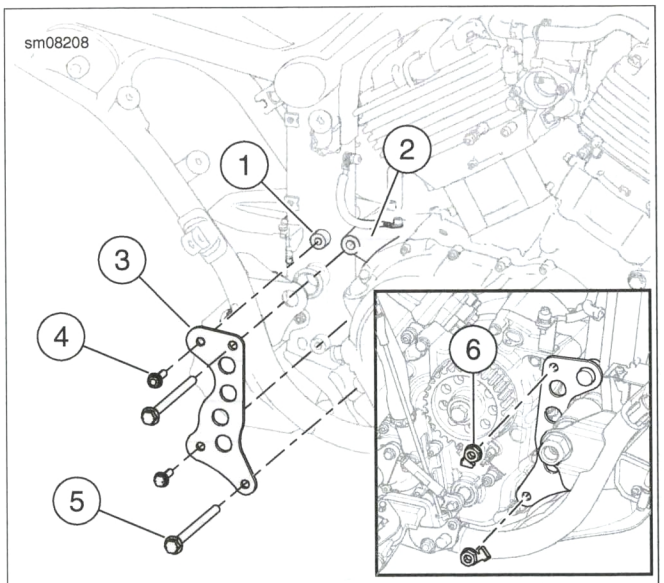

1. **Frame**
2. **Engine**
3. **Rear engine mount**
4. **Screw (2)**
5. **Bolt (2)**
6. **Flag nut (2)**

Figure 4-7. Rear Engine Mount

INSTALL

FASTENER	TORQUE VALUE	
Rear engine mount screw, to frame	22.5-27.5 Nm	17-20 ft-lbs
Rear engine mount bolt, to engine	42.7-47.3 Nm	32-34 ft-lbs

1. See Figure 4-7. Install rear engine mount.
   a. Align rear engine mount (3).
   b. Loosely install screws (4) to frame (1).
   c. Insert flag nuts (6) to frame.
   d. Loosely install bolts (5) to engine (2).
   e. Tighten screws to 22.5-27.5 Nm (17-20 ft-lbs).
   f. Tighten bolts to 42.7-47.3 Nm (32-34 ft-lbs).

INSPECT

1. Check engine mounts.
   a. Check that all engine mount bolts and screws are tight.
   b. Check for cracks or damage. Verify that the mounts are supporting the weight of the motor. Replace as necessary.

COMPLETE

1. Connect negative battery cable. See 8.4 POWER DISCONNECT.
2. Install front belt guard. See 3.21 BELT GUARDS.

REMOVE

PART NUMBER	TOOL NAME
HD-45968	FAT JACK

Follow all steps listed to remove engine from frame. Refer to Table 4-22.

Table 4-22. Remove Engine

STEP NO.	COMPONENT	INSTRUCTIONS
1	Secure motorcycle on lift.	2.2 GENERAL, Secure the Motorcycle for Service
2	Remove seat.	3.36 SEAT
3	Purge and disconnect fuel supply line.	6.6 FUEL LINE
4	Remove side covers.	3.17 SIDE COVERS
5	Disconnect negative battery cable from frame stud.	8.4 POWER DISCONNECT
6	Remove front belt guard.	3.21 BELT GUARDS
7	Remove fuel tank.	6.5 FUEL TANK
8	Drain engine oil and discard filter.	2.5 REPLACE ENGINE OIL AND FILTER
9	Disconnect jiffy stand sensor connector.	8.28 JIFFY STAND SENSOR
10	Remove left side rider foot control.	3.34 RIDER FOOT CONTROLS
11	Install oil drain plug after oil has drained.	2.5 REPLACE ENGINE OIL AND FILTER
12	Drain cooling system.	2.15 INSPECT RADIATOR AND COOLANT
13	Remove engine coolant hoses from engine.	7.9 COOLANT HOSES
14	Disconnect cooling fan connector.	8.25 COOLING FAN
15	Remove cooling fan and radiator.	7.11 RADIATOR
16	Remove thermostat housing.	7.6 THERMOSTAT HOUSING
17	Disconnect engine wire harness.	8.31 ENGINE WIRE HARNESS
18	Disconnect Vehicle Speed Sensor (VSS) connector.	8.26 VEHICLE SPEED SENSOR (VSS)
19	Disconnect rear oxygen (O2) sensor connector.	6.16 OXYGEN (O2) SENSOR
20	Disconnect neutral indicator switch connector.	8.16 NEUTRAL INDICATOR SWITCH
21	Disconnect oil pressure switch connector.	8.15 OIL PRESSURE SWITCH
22	Disconnect alternator and CKP sensor connectors.	8.8 VOLTAGE REGULATOR
23	Disconnect horn connector.	8.17 HORN
24	Remove drive belt.	5.4 DRIVE BELT
25	Remove upper front engine mount.	4.7 FRONT ENGINE MOUNT
26	Disconnect starter.	8.5 STARTER
27	Disconnect front oxygen (O2) sensor connector.	6.16 OXYGEN (O2) SENSOR
28	Remove right side rider foot control.	3.34 RIDER FOOT CONTROLS
29	Remove exhaust system.	6.18 EXHAUST SYSTEM
30	Remove air cleaner assembly.	6.18 EXHAUST SYSTEM
31	Remove induction module asssembly.	6.15 INDUCTION MODULE

Table 4-22. Remove Engine

STEP NO.	COMPONENT	INSTRUCTIONS
32	Disconnect engine to frame ground from engine stud.	8.31 ENGINE WIRE HARNESS
33	Disconnect lower clutch cable.	3.23 CLUTCH CONTROL
34	Support engine.	Support engine using FAT JACK (Part No. HD-45968) or similar.
35	Remove lower front engine mount.	4.7 FRONT ENGINE MOUNT
36	Remove rear engine mount.	4.8 REAR ENGINE MOUNT
37	Remove engine from chassis.	Tilt top of engine toward the right side. Remove from chassis.

INSTALL

PART NUMBER	TOOL NAME
HD-45968	FAT JACK

Follow all steps listed to install engine in frame. Refer to Table 4-23.

Table 4-23. Install Engine

STEP NO.	COMPONENT	INSTRUCTIONS
1	Secure motorcycle on lift.	2.2 GENERAL, Secure the Motorcycle for Service
2	Install engine.	Lift engine as necessary. Install engine from right side. Align in chassis. Support engine using FAT JACK (Part No. HD-45968).
3	Install rear engine mount.	4.8 REAR ENGINE MOUNT
4	Install lower front engine mount.	4.7 FRONT ENGINE MOUNT
5	Install upper front engine mount.	4.7 FRONT ENGINE MOUNT
6	Connect lower clutch cable.	3.23 CLUTCH CONTROL
7	Adjust clutch cable.	2.11 CHECK AND ADJUST CLUTCH
8	Connect engine to frame ground to engine stud.	8.31 ENGINE WIRE HARNESS
9	Install induction module.	6.15 INDUCTION MODULE
10	Install air cleaner assembly.	6.3 AIR CLEANER ASSEMBLY
11	Adjust throttle and idle cables.	2.10 CHECK AND ADJUST THROTTLE CABLES
12	Connect purge line to induction module.	6.15 INDUCTION MODULE
13	Install exhaust system.	6.18 EXHAUST SYSTEM
14	Install right side rider foot control.	3.34 RIDER FOOT CONTROLS
15	Connect front oxygen (O2) sensor connector.	6.16 OXYGEN (O2) SENSOR
16	Connect starter.	8.5 STARTER
17	Install drive belt.	5.4 DRIVE BELT
18	Connect horn connector.	8.17 HORN
19	Connect alternator and CKP sensor connectors.	8.8 VOLTAGE REGULATOR
20	Connect oil pressure switch connector.	8.15 OIL PRESSURE SWITCH
21	Connect neutral indicator switch connector.	8.16 NEUTRAL INDICATOR SWITCH
22	Connect rear oxygen (O2) sensor connector.	6.16 OXYGEN (O2) SENSOR
23	Connect Vehicle Speed Sensor (VSS) connector.	8.26 VEHICLE SPEED SENSOR (VSS)

Table 4-23. Install Engine

STEP NO.	COMPONENT	INSTRUCTIONS
24	Connect engine wire harness.	8.31 ENGINE WIRE HARNESS
25	Install thermostat housing.	3.13 REAR BRAKE MASTER CYLINDER
26	Install cooling fan and radiator.	7.11 RADIATOR
27	Connect cooling fan connector.	8.25 COOLING FAN
28	Install engine coolant hoses.	7.9 COOLANT HOSES
29	Fill cooling system with **new** coolant.	2.15 INSPECT RADIATOR AND COOLANT
30	Pressure test cooling system.	7.4 DIAGNOSE AND TEST
31	Install left side rider foot control.	3.34 RIDER FOOT CONTROLS
32	Connect jiffy stand switch connector.	8.28 JIFFY STAND SENSOR
33	Install fuel tank.	6.5 FUEL TANK
34	Connect fuel supply line.	6.6 FUEL LINE
35	Install engine oil drain plug. Install **new** oil filter. Fill engine with **new** oil.	2.5 REPLACE ENGINE OIL AND FILTER
36	Install front belt guard.	5.4 DRIVE BELT
37	Connect neagtive battery cable.	8.4 POWER DISCONNECT
38	Install side covers.	3.17 SIDE COVERS
39	Install seat.	3.36 SEAT
40	Run motorcycle. Perform engine oil level hot check.	2.5 REPLACE ENGINE OIL AND FILTER

ENGINE ROTATION AND TOP DEAD CENTER (TDC)

Engine Rotation

NOTICE

Rotate engine toward front cylinder only. Do not rotate engine toward rear cylinder, as engine damage can result. (00409c)

Cylinder is at TDC when arrow on cam sprocket is perpendicular to cylinder head gasket surface.

ENGINE REBUILD SEQUENCE

PART NUMBER	TOOL NAME
HD-51460	ENGINE STAND ADAPTER

Disassemble

Follow all steps listed to disassemble engine before a complete rebuild. Refer to Table 4-24.

Table 4-24. Engine Rebuild Sequence: Disassemble

STEP NO.	COMPONENT	INSTRUCTIONS
Prepare Engine		
1	Mount engine in stand.	Use ENGINE STAND ADAPTER (Part No. HD-51460).
2	Remove spark plugs.	2.26 REPLACE SPARK PLUGS
3	Remove intake adapters.	4.11 INTAKE ADAPTER
4	Remove cylinder head covers.	4.12 CYLINDER HEAD COVERS
5	Remove starter.	8.5 STARTER
6	Remove clutch cover.	4.22 CLUTCH COVER
7	Discard oil filter.	2.5 REPLACE ENGINE OIL AND FILTER
8	Remove alternator cover.	4.21 ALTERNATOR COVER
Alternator Side		
9	Remove alternator rotor and starter ring gear.	8.7 ALTERNATOR.
Rear Cylinder		
10	Rotate engine to rear cylinder TDC.	4.10 REBUILD ENGINE
11	Remove rear cam sprocket, timing chain and tensioner assembly.	4.13 CAMSHAFT SPROCKET AND TIMING CHAIN
12	Remove rear cylinder head assembly.	4.14 CYLINDER HEADS
13	Remove rear cylinder assembly.	4.19 CYLINDERS
14	Remove rear piston assembly.	4.20 PISTONS
Clutch Side		
15	Rotate engine to front cylinder TDC.	4.10 REBUILD ENGINE
16	Remove clutch.	5.7 CLUTCH
17	Remove balancer.	4.23 BALANCER
18	Remove oil pump.	4.26 OIL PUMP
19	Remove crankshaft gear.	4.24 CRANKSHAFT GEAR
Front Cylinder		
20	Remove front cam sprocket, timing chain and tensioner assembly.	4.13 CAMSHAFT SPROCKET AND TIMING CHAIN
21	Remove front cylinder head assembly.	4.14 CYLINDER HEADS
22	Remove front cylinder assembly.	4.19 CYLINDERS
23	Remove front piston.	4.20 PISTONS
Crankcases, Crankshaft and Connecting Rods		
1	Remove engine from stand.	
24	Seperate the crankcase halves.	4.28 CRANKCASE ASSEMBLY

Table 4-24. Engine Rebuild Sequence: Disassemble

STEP NO.	COMPONENT	INSTRUCTIONS
25	Mount right crankcase half in stand.	Use ENGINE STAND ADAPTER (Part No. HD-51460).
26	Remove crankshaft assembly.	4.32 CRANKSHAFT AND CONNECTING RODS
27	Disassemble connecting rods.	4.32 CRANKSHAFT AND CONNECTING RODS
28	Remove crankcase oil nozzles.	4.30 CRANKCASE OIL NOZZLES
Transmission		
29	Remove shift forks and drum from crankcase.	5.8 DRUM AND FORKS.
30	Remove transmission from crankcase.	5.9 TRANSMISSION.
31	Disassemble transmission gears.	5.9 TRANSMISSION
Transmission Bearings		
32	Remove right crankcase bearings.	5.10 TRANSMISSION RIGHT CRANKCASE BEARINGS
33	Remove left crankcase bearings.	5.11 TRANSMISSION LEFT CRANKCASE BEARINGS
Main Bearings		
34	Remove main bearings.	4.29 MAIN BEARINGS

Assemble

Follow all steps listed to assemble engine after a complete rebuild. Refer to Table 4-25.

Table 4-25. Engine Rebuild Sequence: Assemble

STEP NO.	COMPONENT	INSTRUCTIONS
Prepare Engine		
1	Mount right crankcase half in stand.	Use ENGINE STAND ADAPTER (Part No. HD-51460).
Main Bearings		
2	Install main bearings.	4.29 MAIN BEARINGS
Transmission Bearings		
3	Install left crankcase bearings.	5.11 TRANSMISSION LEFT CRANKCASE BEARINGS
4	Install right crankcase bearings.	5.10 TRANSMISSION RIGHT CRANKCASE BEARINGS
Transmission		
5	Assemble transmission gears.	5.9 TRANSMISSION
6	Install transmission to crankcase.	5.9 TRANSMISSION.
7	Install shift forks and drum to crankcase.	5.8 DRUM AND FORKS.
Crankcases, Crankshaft and Connecting Rods		
8	Install crankcase oil nozzles.	4.30 CRANKCASE OIL NOZZLES
9	Assemble connecting rods.	4.32 CRANKSHAFT AND CONNECTING RODS
10	Install crankshaft assembly.	4.32 CRANKSHAFT AND CONNECTING RODS
12	Remove engine from stand.	
13	Join the crankcase halves.	4.28 CRANKCASE ASSEMBLY
14	Mount engine in stand.	Use ENGINE STAND ADAPTER (Part No. HD-51460).
Rear Cylinder		
15	Rotate engine to rear cylinder TDC.	4.10 REBUILD ENGINE
16	Install rear piston assembly.	4.10 REBUILD ENGINE
17	Install rear cylinder assembly.	4.19 CYLINDERS
18	Install rear cylinder head assembly.	4.14 CYLINDER HEADS
19	Install rear cam sprocket, timing chain and tensioner assembly.	4.13 CAMSHAFT SPROCKET AND TIMING CHAIN
Clutch Side		
20	Install oil pump.	4.26 OIL PUMP
21	Install crankshaft gear.	4.24 CRANKSHAFT GEAR
22	Install balancer.	4.23 BALANCER
23	Install clutch.	5.7 CLUTCH
Front Cylinder		
24	Rotate engine to front cylinder TDC.	4.10 REBUILD ENGINE
25	Install front piston assembly.	4.20 PISTONS
26	Install front cylinder assembly.	4.19 CYLINDERS
27	Install front cylinder head assembly.	4.14 CYLINDER HEADS
28	Install front cam sprocket, timing chain and tensioner assembly.	4.13 CAMSHAFT SPROCKET AND TIMING CHAIN
Alternator Side		
29	Install starter ring gear and alternator rotor.	8.7 ALTERNATOR.
Finish Assembly		
30	Install alternator cover.	4.21 ALTERNATOR COVER
31	Install output pulley.	5.5 OUTPUT PULLEY
32	Install **new** oil filter.	2.5 REPLACE ENGINE OIL AND FILTER

Table 4-25. Engine Rebuild Sequence: Assemble

STEP NO.	COMPONENT	INSTRUCTIONS
33	Install clutch cover.	4.22 CLUTCH COVER
34	Install starter.	8.5 STARTER
35	Install cylinder head covers.	4.12 CYLINDER HEAD COVERS
36	Install intake adapters.	4.11 INTAKE ADAPTER
37	Install spark plugs.	2.26 REPLACE SPARK PLUGS
38	Remove engine from stand.	

PREPARE

1. Remove main fuse. See 8.4 POWER DISCONNECT.
2. Lift rear of fuel tank. See 6.4 LIFT REAR OF FUEL TANK.
3. Remove air cleaner assembly. See 6.3 AIR CLEANER ASSEMBLY.
4. Remove breather hoses. See 6.14 BREATHER HOSES.
5. Remove induction module. See 6.15 INDUCTION MODULE.

REMOVE

1. See Figure 4-8. Remove intake adapter assembly.
   a. Remove clamp (2).
   b. Remove screws (3).
   c. Remove intake adapter assembly (1).

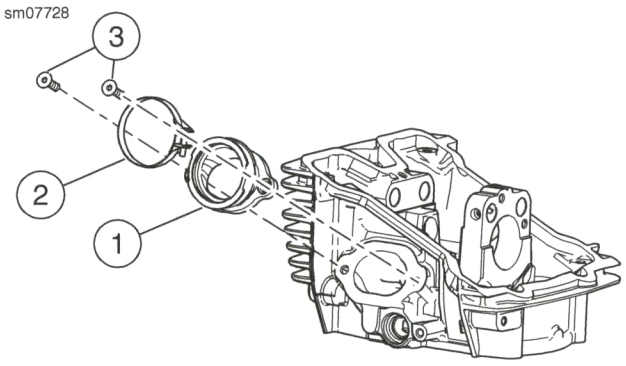

1. **Intake adapter assembly**
2. **Clamp**
3. **Screw (2)**

Figure 4-8. Intake Adapter

INSTALL

FASTENER	TORQUE VALUE	
Intake adapter screw	10.0-12.0 Nm	89-106 **in-lbs**

1. See Figure 4-8. Install intake adapter assembly.
   a. Install intake adapter assembly (1).
   b. Install screws (3). Tighten to 10.0-12.0 Nm (89-106 **in-lbs**).
   c. Install clamp (2). Do not tighten.

CLEAN AND INSPECT

1. Clean all parts thoroughly.
2. Inspect rubber intake adapter for cracks or tears. Replace as necessary.

COMPLETE

1. Install induction module. See 6.15 INDUCTION MODULE.
2. Install breather hoses. See 6.14 BREATHER HOSES.
3. Install air cleaner assembly. See 6.3 AIR CLEANER ASSEMBLY.
4. Secure rear of fuel tank. See 6.4 LIFT REAR OF FUEL TANK.
5. Install main fuse. See 8.4 POWER DISCONNECT.

PREPARE

1. Disconnect negative battery cable. See 8.4 POWER DISCONNECT.
2. Lift rear of fuel tank. See 6.4 LIFT REAR OF FUEL TANK.
3. Remove breather hoses. See 6.14 BREATHER HOSES.

REMOVE

1. See Figure 4-9. Remove cylinder head cover.
   a. Discard fasteners (2 through 4).
   b. Remove cylinder head cover (1).
   c. Discard gasket (5).

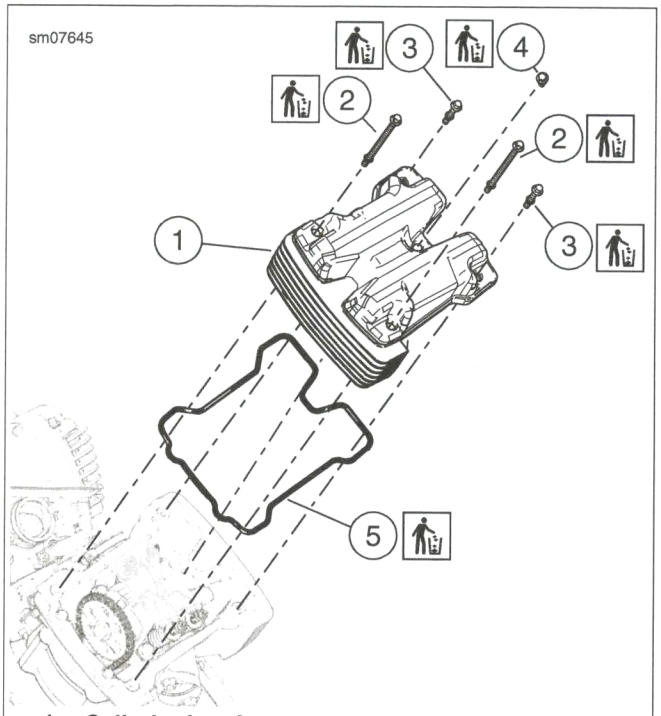

1. **Cylinder head cover**
2. **Long bolt (2)**
3. **Medium bolt (2)**
4. **Short bolt**
5. **Gasket**

Figure 4-9. Cylinder Head Cover

INSTALL

FASTENER	TORQUE VALUE	
Cylinder head cover bolt	10.0-12.0 Nm	89-106 **in-lbs**

NOTE

Verify that all mating and screw mounting surfaces are clean and dry before installation.

1. See Figure 4-9. Install cylinder head cover.
   a. Install cylinder head cover (1) and **new** gasket (5).
   b. Install **new** medium bolts (3).
   c. Install **new** long bolts (2).
   d. Install **new** short bolt (4).
   e. See Figure 4-9. Tighten cylinder head bolts in sequence shown to 10.0-12.0 Nm (89-106 **in-lbs**).

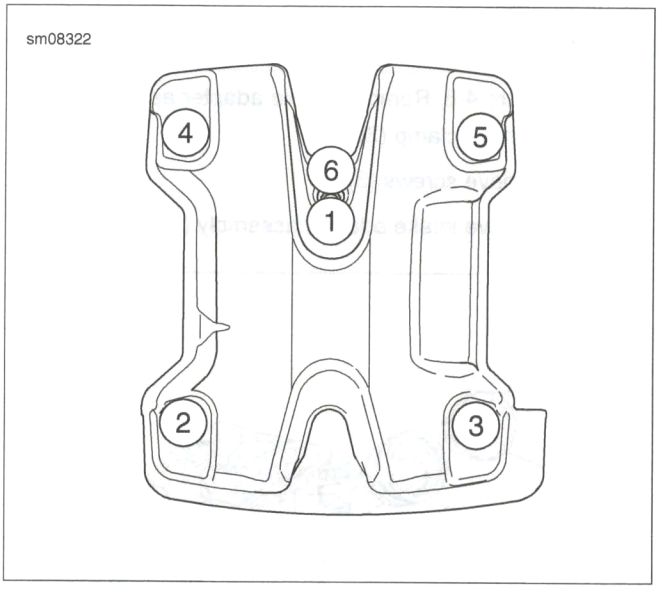

Figure 4-10. Cylinder Head Cover Tightening Sequence

DISASSEMBLE

1. See Figure 4-11. Remove baffle plate.
   a. Remove screws (3).
   b. Remove baffle plate (2).
   c. Discard gasket (1).

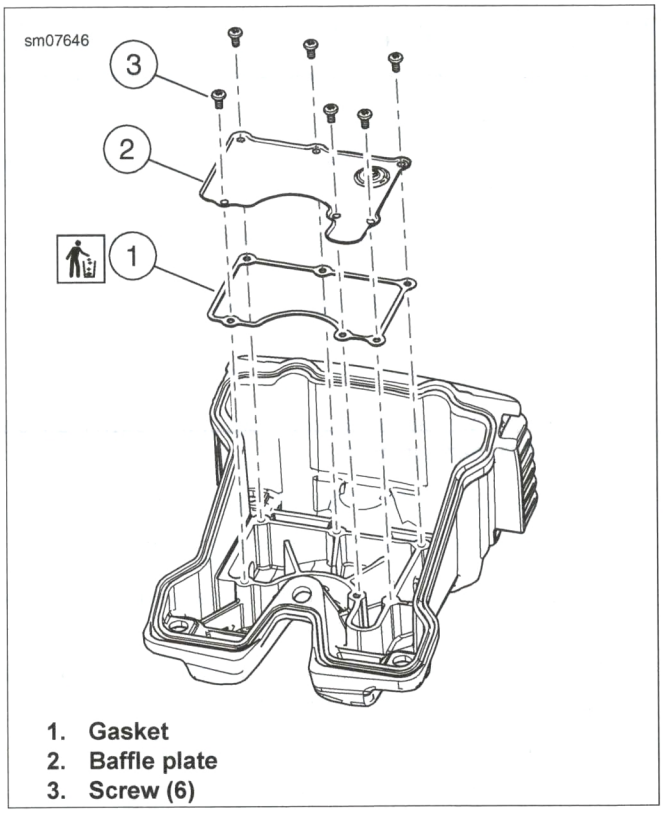

1. **Gasket**
2. **Baffle plate**
3. **Screw (6)**

Figure 4-11. Baffle Plate

CLEAN AND INSPECT

1. Clean all parts.
   a. Clean baffle plate.
   b. Clean mating surfaces on cylinder head and cover.
   c. Clean screw mounting surfaces on cylinder head cover.

ASSEMBLE

FASTENER	TORQUE VALUE	
Baffle plate screw	3.0-5.0 Nm	27-44 **in-lbs**

1. See Figure 4-11. Install baffle plate.
   a. Install **new** gasket (1).
   b. Install baffle plate (2).
   c. Install screws (3). Tighten to 3.0-5.0 Nm (27-44 **in-lbs**).

COMPLETE

1. Install breather hoses. See 6.14 BREATHER HOSES.
2. Secure rear of fuel tank. See 6.4 LIFT REAR OF FUEL TANK.
3. Connect negative battery cable. See 8.4 POWER DISCONNECT.

PREPARE

1. Remove front belt guard. See 3.21 BELT GUARDS.
2. Disconnect negative battery cable. See 8.4 POWER DISCONNECT.
3. Lift rear of fuel tank. See 6.4 LIFT REAR OF FUEL TANK.
4. Remove exhaust system. See 6.18 EXHAUST SYSTEM.
5. Remove air cleaner assembly. See 6.3 AIR CLEANER ASSEMBLY.
6. Remove breather hoses. See 6.14 BREATHER HOSES.
7. Remove cylinder head covers. See 4.12 CYLINDER HEAD COVERS.
8. **Front cylinder:** Remove clutch cover and crankshaft gear. See 4.24 CRANKSHAFT GEAR.
9. **Rear cylinder:** Remove alternator cover and alternator rotor. See 8.7 ALTERNATOR.

CAMSHAFT SPROCKET, TIMING CHAIN AND CAM TIMING

PART NUMBER	TOOL NAME
HD-51442	CAM HOLDER

FASTENER	TORQUE VALUE	
Chain guide shoulder bolt	10-12 Nm	7.4-8.9 lb-ft
Tensioner mounting bolts and spring tensioning bolt	10-12 Nm	7.4-8.9 lb-ft
Cam sprocket bolt	40-44 Nm	29.5-32.4 lb-ft
Chain guide shoulder bolt	10-12 Nm	7.4-8.9 lb-ft
Tensioner mounting bolts and spring tensioning bolt	10-12 Nm	7.4-8.9 lb-ft
Cam sprocket bolt	40-44 Nm	29.5-32.4 lb-ft
Chain guide shoulder bolt	10-12 Nm	7.4-8.9 lb-ft
Tensioner mounting bolts and spring tensioning bolt	10-12 Nm	7.4-8.9 lb-ft
Cam sprocket bolt	40-44 Nm	29.5-32.4 lb-ft

NOTICE

Rotate engine toward front cylinder only. Do not rotate engine toward rear cylinder, as engine damage can result. (00409c)

NOTICE

Never rotate engine with cam chain tensioner removed. Engine damage and loss of correct timing will occur. (00545c)

NOTE

When rotating the engine use the crankshaft gear fastener. Always rotate the engine in the running direction of the engine.

One Cam Removed

1. Rotate crankshaft until the installed cam sprocket arrow is facing down.
2. Install the cam sprocket and timing chain on the opposite cylinder.
   a. Align single black chain link with cam sprocket TDC arrow.
   b. Place the timing chain in position.
   c. Align each black link on the chain with each mark on crankshaft sprocket.
   d. Align the sprocket with the camshaft keyway.
   e. Install the cam sprocket bolt finger-tight.
3. Install the tension side chain guide and tighten the shoulder bolt to 10-12 Nm (7.4-8.9 lb-ft).
4. Install and tighten the tensioner mounting bolts and the spring tensioning bolt to 10-12 Nm (7.4-8.9 lb-ft).
5. Lock the cam in place with the holding tool.
6. Tighten the cam sprocket bolt to 40-44 Nm (29.5-32.4 lb-ft).
7. Verify cylinder timing.

Both Cams Removed

Rear Cylinder:

1. Rotate the crankshaft to place the rear piston at TDC.
2. Install the cam sprocket and chain on the rear cylinder.
   a. Align single black chain link with cam sprocket TDC arrow.
   b. Place the chain into position.
   c. Align each black link on the chain with each mark on crankshaft sprocket.
   d. Align the sprocket with the camshaft keyway.
   e. Install the cam sprocket bolt finger-tight.
3. Install the tension side chain guide and tighten the shoulder bolt to 10-12 Nm (7.4-8.9 lb-ft).
4. Install and tighten the tensioner mounting bolts and the spring tensioning bolt to 10-12 Nm (7.4-8.9 lb-ft).
5. Lock the cam in place with the holding tool.
6. Tighten the cam sprocket bolt to 40-44 Nm (29.5-32.4 lb-ft).
7. Verify cylinder timing.

Front Cylinder:

1. From the clutch side, rotate the crankshaft 420 degree to place the front piston at TDC.

2. Install the cam sprocket and chain on the front cylinder.
   a. Align single black chain link with cam sprocket TDC arrow.
   b. Place the chain into position.
   c. Align each black link on the chain with each mark on crankshaft sprocket.
   d. Align the sprocket with the camshaft keyway.
   e. Install the cam sprocket bolt finger-tight.
3. Install the tension side chain guide and tighten the shoulder bolt to 10-12 Nm (7.4-8.9 lb-ft).
4. Install and tighten the tensioner mounting bolts and the spring tensioning bolt to 10-12 Nm (7.4-8.9 lb-ft).
5. Lock the cam in place with the holding tool.
6. Tighten the cam sprocket bolt to 40-44 Nm (29.5-32.4 lb-ft).
7. Verify cylinder timing.

Timing Chain Tensioner

1. See Figure 4-12. Remove timing chain tensioner assembly.
   a. Remove spring holder bolt (4).
   b. Discard gasket (3).
   c. Remove spring (5).
   d. Remove screws (2).
   e. Remove timing chain tensioner assembly (1).
   f. Discard gasket (6).
2. Remove tension side timing chain guide. See 4.18 CHAIN GUIDE.

Camshaft Sprocket and Timing Chain

1. See Figure 4-13. Remove camshaft sprocket and timing chain.
   a. Place CAM HOLDER (Part No. HD-51442) over cylinder head and camshaft.
   b. Remove camshaft bolt (1).
   c. Remove cam holder tool.
   d. Remove camshaft sprocket (2) and timing chain.
   e. Remove timing chain from crankshaft and remove chain through top of engine.

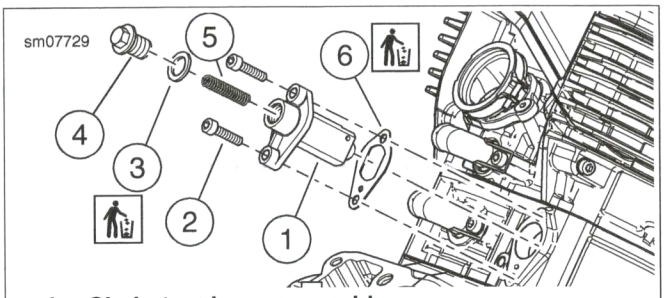

1. **Chain tensioner assembly**
2. **Screw (2)**
3. **Gasket**
4. **Spring holder bolt**
5. **Spring**
6. **Gasket**

Figure 4-12. Timing Chain Tensioner

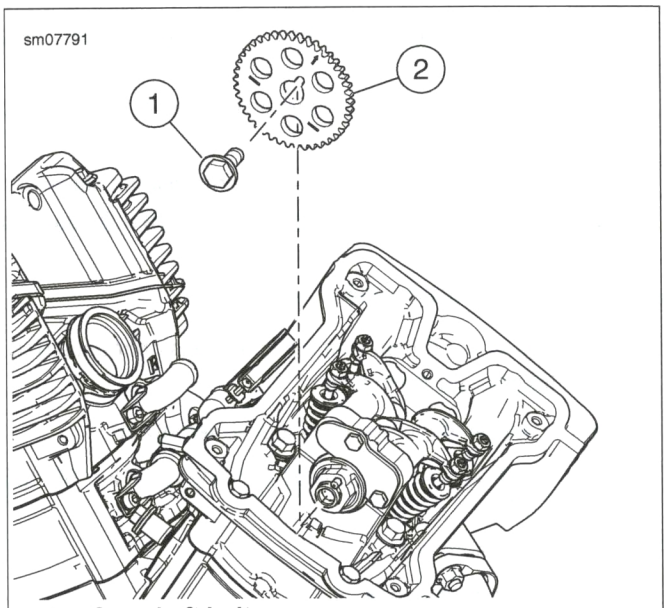

1. **Camshaft bolt**
2. **Camshaft sprocket**

Figure 4-13. Camshaft Sprocket

INSTALL

PART NUMBER	TOOL NAME
HD-51442	CAM HOLDER

FASTENER	TORQUE VALUE	
Camshaft bolt	40.0-44.0 Nm	30-32 ft-lbs
Timing chain tensioner screw	10.0-12.0 Nm	89-106 **in-lbs**
Spring holder bolt	10.0-12.0 Nm	89-106 **in-lbs**

Camshaft Sprocket and Timing Chain

1. Verify that piston is at TDC. See 4.10 REBUILD ENGINE.
2. See Figure 4-14. Install timing chain.
   a. Install timing chain through top of engine.
   b. Align two black links with marks on crankshaft.
   c. Set timing chain aside at top of engine.

3. See Figure 4-15. Install camshaft sprocket and timing chain.
   a. Align single black link (1) with arrow (2) on camshaft sprocket (3).
   b. Place cam chain over camshaft sprocket.
   c. Align camshaft sprocket with keyway (4).
   d. Install camshaft sprocket and timing chain.
   e. Place CAM HOLDER (Part No. HD-51442) over cylinder head and camshaft.
   f. See Figure 4-13. Install camshaft bolt (1). Tighten to 40.0-44.0 Nm (30-32 ft-lbs).
   g. Remove cam holder tool.

Timing Chain Tensioner

NOTE

Verify that timing chain tensioner assembly is disassembled before installation.

1. Install tension side timing chain guide. See 4.10 REBUILD ENGINE.
2. See Figure 4-16. Prepare timing chain tensioner assembly.
   a. Press ratchet mechanism (2) to release adjusting rod (1).
   b. Fully retract adjusting rod.
3. See Figure 4-12. Install timing chain tensioner assembly.
   a. Install **new** gasket (6).
   b. Install timing chain tensioner assembly (1).
   c. Install screws (2). Tighten to 10.0-12.0 Nm (89-106 **in-lbs**).
   d. Install spring (5).
   e. Install **new** gasket (3).
   f. Install spring holder bolt (4). Tighten to 10.0-12.0 Nm (89-106 **in-lbs**).

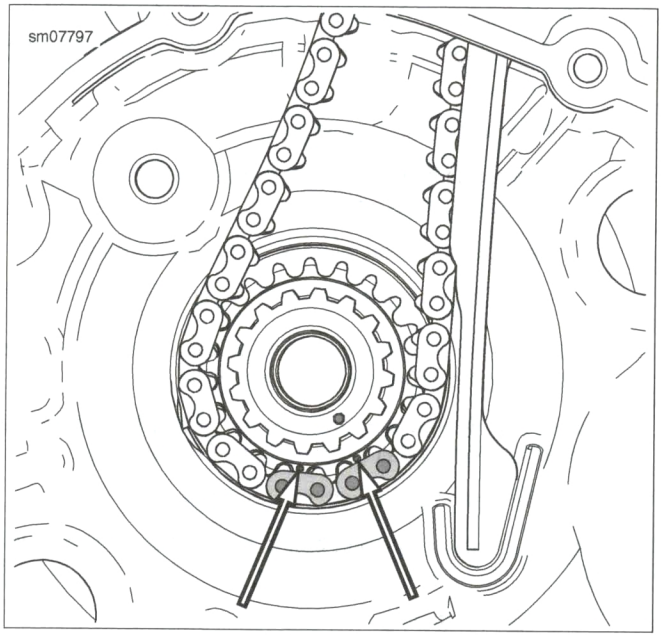

Figure 4-14. Crankshaft Timing Marks

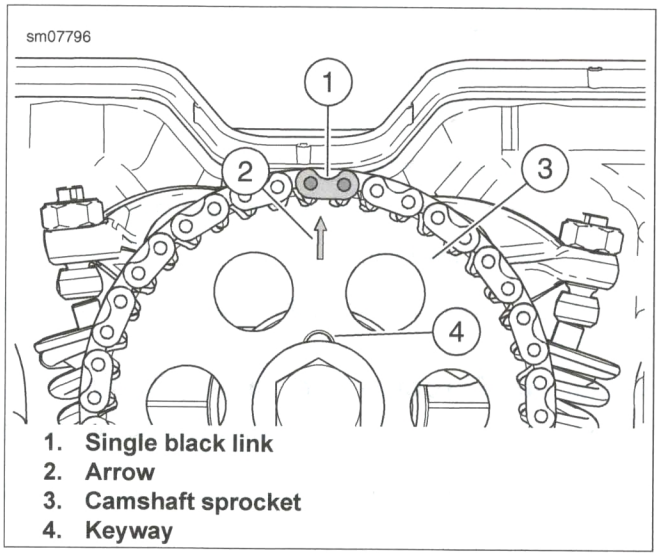

1. **Single black link**
2. **Arrow**
3. **Camshaft sprocket**
4. **Keyway**

Figure 4-15. Camshaft Sprocket and Timing Chain

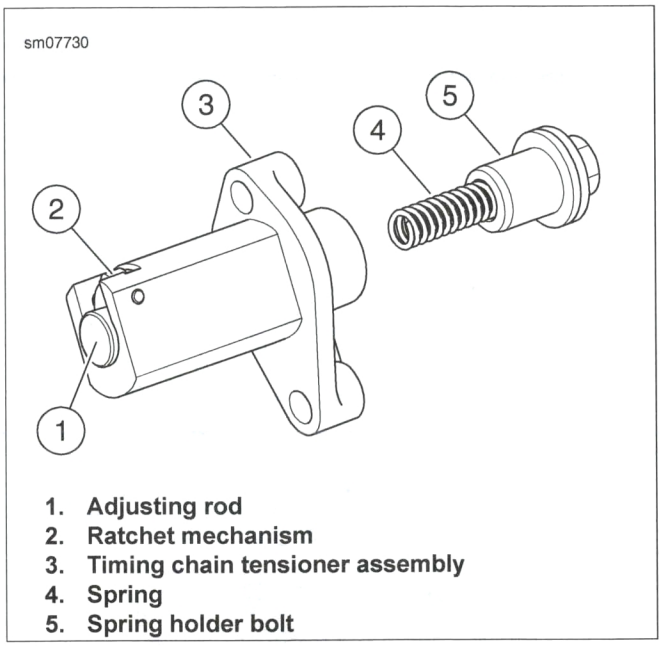

1. **Adjusting rod**
2. **Ratchet mechanism**
3. **Timing chain tensioner assembly**
4. **Spring**
5. **Spring holder bolt**

Figure 4-16. Ratchet Mechanism

CLEAN AND INSPECT

Camshaft Sprocket and Timing Chain

1. Clean all parts thoroughly.
2. Inspect camshaft sprocket teeth for wear. Replace as necessary.
3. Inspect timing chain for wear. Replace as necessary.

Timing Chain Tensioner

NOTE

The timing chain tensioner assembly contains no serviceable parts. Replace as necessary.

1. Inspect timing chain tensioner assembly.
   a. Clean all parts.
   b. Verify ratchet assembly spring tension.
   c. Verify smooth movement of adjusting rod.

COMPLETE

1. **Front cylinder:** Install alternator rotor and alternator cover. See 8.7 ALTERNATOR.
2. **Rear cylinder:** Install crankshaft gear and clutch cover. See 4.24 CRANKSHAFT GEAR.
3. Install cylinder head covers. See 4.12 CYLINDER HEAD COVERS.
4. Install breather hoses. See 6.14 BREATHER HOSES.
5. Install air cleaner assembly. See 6.3 AIR CLEANER ASSEMBLY.
6. Install exhaust system. See 6.18 EXHAUST SYSTEM.
7. Secure rear of fuel tank. See 6.4 LIFT REAR OF FUEL TANK.
8. Connect negative battery cable. See 8.4 POWER DISCONNECT.
9. Install front belt guard. See 3.21 BELT GUARDS.

PREPARE

1. Remove front belt guard. See 3.21 BELT GUARDS.
2. Disconnect negative battery cable. See 8.4 POWER DISCONNECT.
3. Remove fuel tank. See 6.5 FUEL TANK.
4. Remove exhaust system. See 6.18 EXHAUST SYSTEM.
5. Remove air cleaner assembly. See 6.3 AIR CLEANER ASSEMBLY.
6. Remove breather hoses. See 6.14 BREATHER HOSES.
7. Remove induction module. See 6.15 INDUCTION MODULE.
8. Remove cylinder head covers. See 4.12 CYLINDER HEAD COVERS.
9. Remove clutch cover. See 4.22 CLUTCH COVER.
10. Remove crankshaft gear. See 4.24 CRANKSHAFT GEAR.
11. Remove alternator cover and alternator. See 8.7 ALTERNATOR.
12. Remove camshaft sprocket and timing chain. See 4.13 CAMSHAFT SPROCKET AND TIMING CHAIN.

REMOVE

1. See Figure 4-17. Remove cylinder head.
   a. Remove flange bolts (2).
   b. Remove cylinder head bolts (3) and washers (4).
   c. Lift cylinder head (1) from dowel pins (6).
   d. Discard gasket (5).

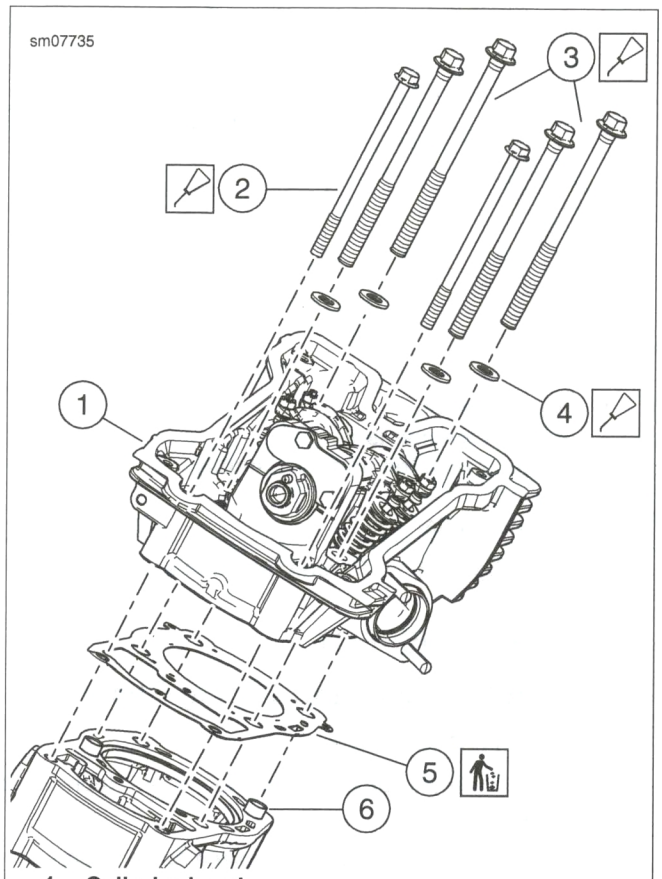

1. **Cylinder head**
2. **Flange bolt (2)**
3. **Cylinder head bolt (4)**
4. **Washer (4)**
5. **Gasket**
6. **Dowel pins (2)**

Figure 4-17. Cylinder Head

INSTALL

FASTENER	TORQUE VALUE	
Cylinder head bolt	50.0-54.0 Nm	37-39 ft-lbs
Cylinder head flange bolt	20.0-25.0 Nm	15-18 ft-lbs

1. See Figure 4-17. Install cylinder head.
   a. Install **new** gasket (5) with the surface marked **TOP** facing up.
   b. Install cylinder head (1) on dowel pins (6).
2. Install cylinder head bolts.
   a. Apply **new** engine oil to washers (4) and threaded portion of the cylinder head bolts (3).
   b. Install washers and cylinder head bolts.
   c. See Figure 4-18. Tighten cylinder head bolts in sequence shown to 50.0-54.0 Nm (37-39 ft-lbs).

3. See Figure 4-17. Install flange bolts.
   a. Apply **new** engine oil to threaded portion of the flange bolts (2).
   b. Install flange bolts (2).
   c. See Figure 4-18. Tighten flange bolts in sequence shown to 20.0-25.0 Nm (15-18 ft-lbs).

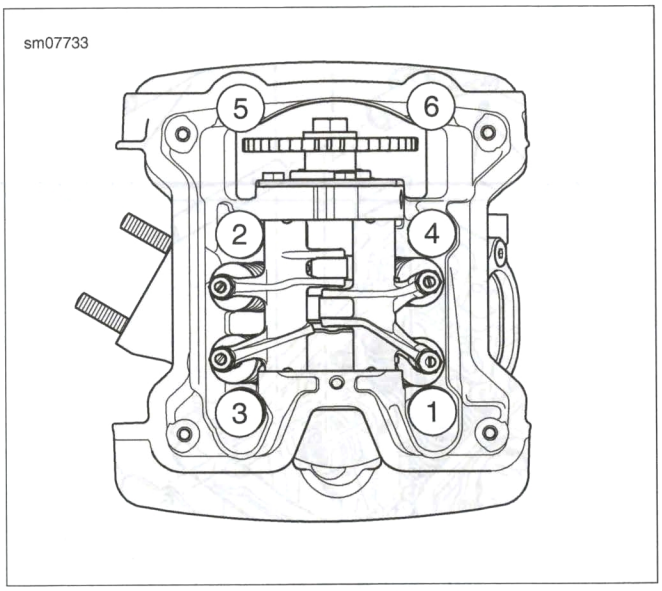

Figure 4-18. Cylinder Head Tightening Sequence

DISASSEMBLE

1. Remove rocker arms. See 4.15 ROCKER ARMS.
2. Remove camshaft assembly. See 4.16 CAMSHAFT ASSEMBLY.
3. Remove valves. See 4.17 VALVES.

CLEAN AND INSPECT

1. Clean all parts thoroughly.
2. Inspect cylinder head for damage. Repair or replace as necessary.
3. Inspect mating surfaces.
   a. Inspect mating surfaces for damage and warping.
   b. Repair or replace as necessary.

ASSEMBLE

1. Install valves. See 4.17 VALVES.
2. Install camshaft assembly. See 4.16 CAMSHAFT ASSEMBLY.
3. Install rocker arms. See 4.15 ROCKER ARMS.

COMPLETE

1. Install camshaft sprocket and timing chain. See 4.13 CAMSHAFT SPROCKET AND TIMING CHAIN.
2. **Rear cylinder:** Install alternator rotor and alternator cover. See 8.7 ALTERNATOR.
3. **Front cylinder:** Install crankshaft gear and clutch cover. See 4.24 CRANKSHAFT GEAR.
4. Install cylinder head covers. See 4.12 CYLINDER HEAD COVERS.
5. Install induction module. See 6.15 INDUCTION MODULE.
6. Install breather hoses. See 6.14 BREATHER HOSES.
7. Install air cleaner assembly. See 6.3 AIR CLEANER ASSEMBLY.
8. Install exhaust system. See 6.18 EXHAUST SYSTEM.
9. Install fuel tank. See 6.5 FUEL TANK.
10. Connect negative battery cable. See 8.4 POWER DISCONNECT.
11. Install front belt guard. See 3.21 BELT GUARDS.

PREPARE

1. Remove front belt guard. See 3.21 BELT GUARDS.
2. Disconnect negative battery cable. See 8.4 POWER DISCONNECT.
3. Lift rear of fuel tank. See 6.4 LIFT REAR OF FUEL TANK.
4. Remove exhaust system. See 6.18 EXHAUST SYSTEM.
5. Remove air cleaner assembly. See 6.3 AIR CLEANER ASSEMBLY.
6. Remove breather system. See 6.14 BREATHER HOSES.
7. Remove cylinder head covers. See 4.12 CYLINDER HEAD COVERS.
8. Remove clutch cover. See 4.22 CLUTCH COVER.
9. Remove crankshaft gear. See 4.22 CLUTCH COVER.
10. Remove alternator cover and alternator. See 8.7 ALTERNATOR.
11. Remove cam sprocket and timing chain. See 4.13 CAMSHAFT SPROCKET AND TIMING CHAIN.

REMOVE

1. See Figure 4-19. Release tension from valves.
   a. Loosen valve adjuster nut (3).
   b. Loosen valve adjuster assembly (1) to remove tension from valve spring.
2. Remove camshaft retainer plate.
   a. Remove screws (7).
   b. Remove camshaft retainer plate (6) from cylinder head assembly (9).

NOTE

If necessary, insert an M8 screw into end of rocker shaft to assist in removal.

3. Remove rocker arms.
   a. Remove rocker shafts (5).
   b. Remove intake rocker arm (2) and exhaust rocker arm (4).

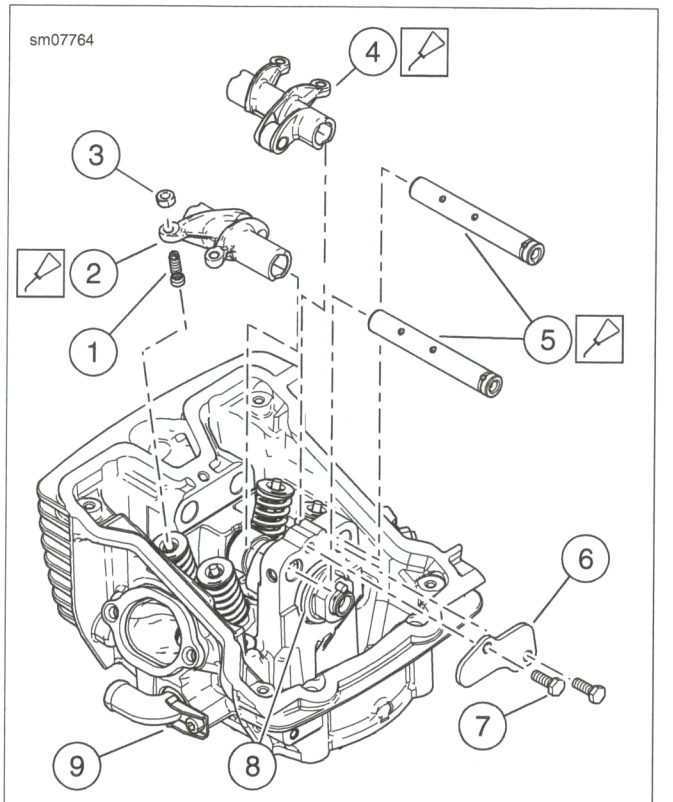

1. **Valve adjuster assembly (4)**
2. **Intake rocker arm**
3. **Valve adjuster nut (4)**
4. **Exhaust rocker arm**
5. **Rocker shaft (2)**
6. **Camshaft retainer plate**
7. **Screw (2)**
8. **Camshaft machined groove**
9. **Cylinder head assembly**

Figure 4-19. Rocker Arms

INSTALL

FASTENER	TORQUE VALUE	
Camshaft retainer plate screw	10.0-12.0 Nm	89-106 **in-lbs**

1. See Figure 4-19. Install rocker arms.
   a. Lubricate intake rocker shaft (5) and the bore of intake rocker arm (2) with **new** engine oil.
   b. Align intake rocker arm to the cylinder head assembly (9).
   c. Install non-threaded end of rocker shafts into cylinder head.
   d. Repeat for exhaust rocker shaft.
2. Install camshaft retainer plate.
   a. Install retainer plate (6) along the machined groove (8) on the camshaft.
   b. Install screws (7). Tighten to 10.0-12.0 Nm (89-106 **in-lbs**).

3. Adjust valves. See 2.24 INSPECT AND ADJUST VALVE LASH

CLEAN AND INSPECT

1. Clean all parts.
2. Inspect for wear. Replace as necessary.
   a. Inspect rocker arm bore.
   b. Inspect valve adjusting assembly for excessive wear.
   c. Inspect roller cam and shaft for excessive wear.

COMPLETE

1. Install cam sprocket and timing chain. See 4.13 CAMSHAFT SPROCKET AND TIMING CHAIN.
2. **Rear cylinder:** Install alternator rotor. See 8.7 ALTERNATOR.
3. **Front cylinder:** Install crankshaft gear. See 4.24 CRANKSHAFT GEAR.
4. Install cylinder head covers. See 4.12 CYLINDER HEAD COVERS.
5. Install breather hoses. See 6.14 BREATHER HOSES.
6. Install air cleaner assembly. See 6.3 AIR CLEANER ASSEMBLY.
7. Install exhaust system. See 6.18 EXHAUST SYSTEM.
8. Secure rear of fuel tank. See 6.4 LIFT REAR OF FUEL TANK.
9. Connect negative battery cable. See 2.25 INSPECT BATTERY.
10. Install front belt guard. See 3.21 BELT GUARDS.

PREPARE

1. Remove front belt guard. See 3.21 BELT GUARDS.
2. Disconnect negative battery cable. See 8.4 POWER DISCONNECT.
3. Lift rear of fuel tank. See 6.4 LIFT REAR OF FUEL TANK.
4. Remove exhaust system. See 6.18 EXHAUST SYSTEM.
5. Remove air cleaner assembly. See 6.3 AIR CLEANER ASSEMBLY.
6. Remove breather hoses. See 6.14 BREATHER HOSES.
7. Remove cylinder head covers. See 4.12 CYLINDER HEAD COVERS.
8. Remove clutch cover. See 4.22 CLUTCH COVER.
9. Remove crankshaft gear. See 4.24 CRANKSHAFT GEAR.
10. Remove alternator. See 8.7 ALTERNATOR.
11. Remove cam sprocket and timing chain. See 4.13 CAMSHAFT SPROCKET AND TIMING CHAIN.
12. Remove rocker arms. See 4.15 ROCKER ARMS.

REMOVE

1. See Figure 4-20. Remove camshaft (1).

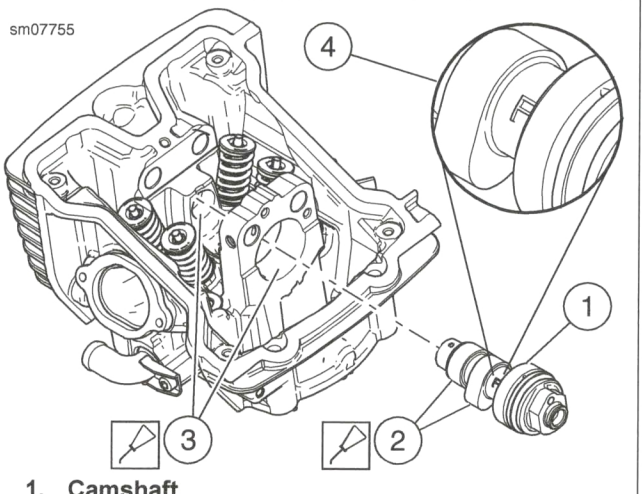

1. **Camshaft**
2. **Camshaft lobe**
3. **Camshaft journal**
4. **Camshaft marking**

Figure 4-20. Camshaft

INSTALL

NOTE

Front and rear camshafts are marked F (front) and R (rear). Install to correct head.

1. See Figure 4-20. Install camshaft.
   a. Rotate cam so lobes (2) are facing down.
   b. Lubricate camshaft lobes and journal (3) with **new** engine oil before installing camshaft.
   c. Install camshaft (1).

CLEAN AND INSPECT

1. Clean all parts thoroughly.
2. Inspect camshaft lobes for wear. Replace as necessary.

COMPLETE

1. Install rocker arms. See 4.15 ROCKER ARMS.
2. Install cam sprocket and timing chain. See 4.13 CAMSHAFT SPROCKET AND TIMING CHAIN.
3. Install alternator. See 8.7 ALTERNATOR.
4. Install crankshaft gear. See 4.24 CRANKSHAFT GEAR.
5. Install clutch cover. See 4.22 CLUTCH COVER.
6. Install cylinder head covers. See 4.12 CYLINDER HEAD COVERS.
7. Install breather hoses. See 6.14 BREATHER HOSES.
8. Install air cleaner assembly. See 6.3 AIR CLEANER ASSEMBLY.
9. Install exhaust system. See 6.18 EXHAUST SYSTEM.
10. Secure rear of fuel tank. See 6.4 LIFT REAR OF FUEL TANK.
11. Connect negative battery cable. See 8.4 POWER DISCONNECT.
12. Install front belt guard. See 3.21 BELT GUARDS.

PREPARE

1. Remove front belt guard. See 3.21 BELT GUARDS.
2. Disconnect negative battery cable. See 8.4 POWER DISCONNECT.
3. Lift rear of fuel tank. See 6.4 LIFT REAR OF FUEL TANK.
4. Remove exhaust system. See 6.18 EXHAUST SYSTEM.
5. Remove air cleaner assembly. See 6.3 AIR CLEANER ASSEMBLY.
6. Remove breather hoses. See 6.14 BREATHER HOSES.
7. Remove induction module. See 6.15 INDUCTION MODULE.
8. Remove cylinder head covers. See 4.12 CYLINDER HEAD COVERS.
9. Remove clutch cover. See 4.22 CLUTCH COVER.
10. Remove crankshaft gear. See 4.24 CRANKSHAFT GEAR.
11. Remove alternator. See 8.7 ALTERNATOR.
12. Remove cam sprocket and timing chain. See 4.13 CAMSHAFT SPROCKET AND TIMING CHAIN.
13. Remove cylinder head. See 4.14 CYLINDER HEADS.
14. Remove rocker arms. See 4.15 ROCKER ARMS.
15. Remove camshaft assembly. See 4.16 CAMSHAFT ASSEMBLY.

REMOVE

PART NUMBER	TOOL NAME
HD-37436	VALVE SPRING COMPRESSOR
HD-39786	CYLINDER HEAD HOLDING FIXTURE

1. Secure cylinder head for service.
   a. Install CYLINDER HEAD HOLDING FIXTURE (Part No. HD-39786) into cylinder head spark plug hole.
   b. Secure cylinder head and tool in vise.
2. See Figure 4-21. Remove valves.
   a. Place VALVE SPRING COMPRESSOR (Part No. HD-37436) over cylinder head. Align with valve assembly.
   b. Slowly compress valve spring.
   c. Remove valve keeper (1).
   d. Slowly release valve spring.
   e. Remove valve spring compressor.
   f. Remove valve spring retainer (2).
   g. Remove valve spring (3).
   h. Discard valve seal (4).
   i. Remove spring seat washer (5).
   j. Remove valve (7).

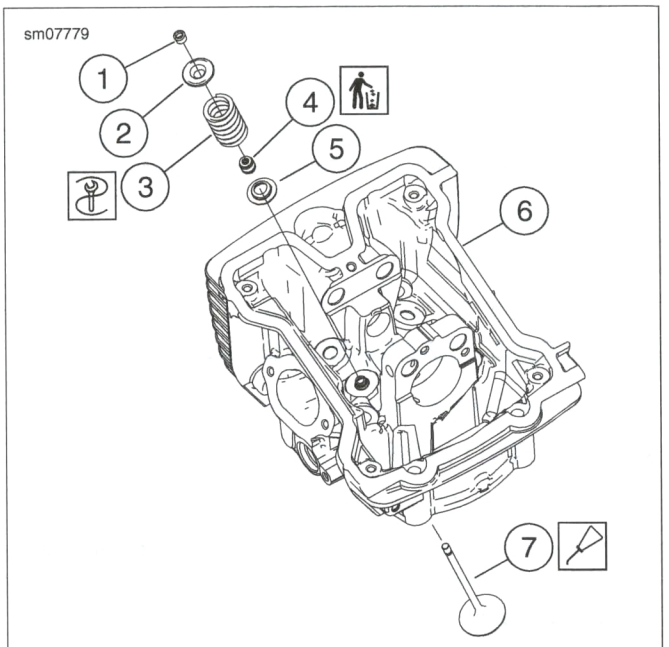

1. **Valve keeper**
2. **Valve spring retainer**
3. **Valve spring**
4. **Valve seal**
5. **Spring seat washer**
6. **Cylinder head**
7. **Valve**

Figure 4-21. Valves

INSTALL

PART NUMBER	TOOL NAME
HD-37436	VALVE SPRING COMPRESSOR
HD-39786	CYLINDER HEAD HOLDING FIXTURE

1. See Figure 4-21. Install spring seat washer (5).
2. Install **new** valve seal (4).
3. Secure cylinder head for service.
   a. Install CYLINDER HEAD HOLDING FIXTURE (Part No. HD-39786) into cylinder head spark plug hole.
   b. Secure cylinder head and tool in vise.
4. Install valve.
   a. Lubricate valve stem with **new** engine oil.

NOTE

Rotate valve while installing to avoid damage to valve seal.

b. Install valve until fully seated.

c. Install valve spring (3).

d. Install valve spring retainer (2).

e. Place VALVE SPRING COMPRESSOR (Part No. HD-37436) over cylinder head. Align with valve assembly.

f. Compress valve spring.

g. Install valve keeper (1).

h. Slowly release valve spring.

i. Remove valve spring compressor.

5. Remove cylinder head from holding fixture.

CLEAN AND INSPECT

1. Clean all parts thoroughly.
2. Inspect valve surface and seat surface for imperfections. Repair or replace as necessary.

COMPLETE

1. Install camshaft assembly. See 4.16 CAMSHAFT ASSEMBLY.
2. Install rocker arms. See 4.15 ROCKER ARMS.
3. Install cylinder head. See 4.14 CYLINDER HEADS.
4. Install cam sprocket and timing chain. See 4.13 CAMSHAFT SPROCKET AND TIMING CHAIN.
5. Install alternator. See 8.7 ALTERNATOR.
6. Install crankshaft gear. See 4.24 CRANKSHAFT GEAR.
7. Install clutch cover. See 4.22 CLUTCH COVER.
8. Install cylinder head covers. See 4.12 CYLINDER HEAD COVERS.
9. Install induction module. See 6.15 INDUCTION MODULE.
10. Install breather hoses. See 6.14 BREATHER HOSES.
11. Install air cleaner assembly. See 6.3 AIR CLEANER ASSEMBLY.
12. Install exhaust system. See 6.18 EXHAUST SYSTEM.
13. Secure rear of fuel tank. See 6.4 LIFT REAR OF FUEL TANK.
14. Connect negative battery cable. See 8.4 POWER DISCONNECT.
15. Install front belt guard. See 3.21 BELT GUARDS.

PREPARE

1. Remove front belt guard. See 3.21 BELT GUARDS.
2. Disconnect negative battery cable. See 8.4 POWER DISCONNECT.
3. Lift rear of fuel tank. See 6.4 LIFT REAR OF FUEL TANK.
4. Remove exhaust system. See 6.18 EXHAUST SYSTEM.
5. Remove air cleaner assembly. See 6.3 AIR CLEANER ASSEMBLY.
6. Remove breather hoses. See 6.14 BREATHER HOSES.
7. Remove induction module. See 6.15 INDUCTION MODULE.
8. Remove cylinder head covers. See 4.12 CYLINDER HEAD COVERS.
9. Remove clutch cover. See 4.22 CLUTCH COVER.
10. Remove crankshaft gear. See 4.24 CRANKSHAFT GEAR.
11. Remove alternator. See 8.7 ALTERNATOR.
12. Remove cam sprocket and timing chain. See 4.13 CAMSHAFT SPROCKET AND TIMING CHAIN.
13. Remove cylinder head. See 4.14 CYLINDER HEADS.

REMOVE

1. See Figure 4-22. Remove slack side chain guide.
   a. Remove shoulder bolt (1).
   b. Remove slack side chain guide (2) through top of engine.
2. Remove tension side chain guide (3) through top of engine.

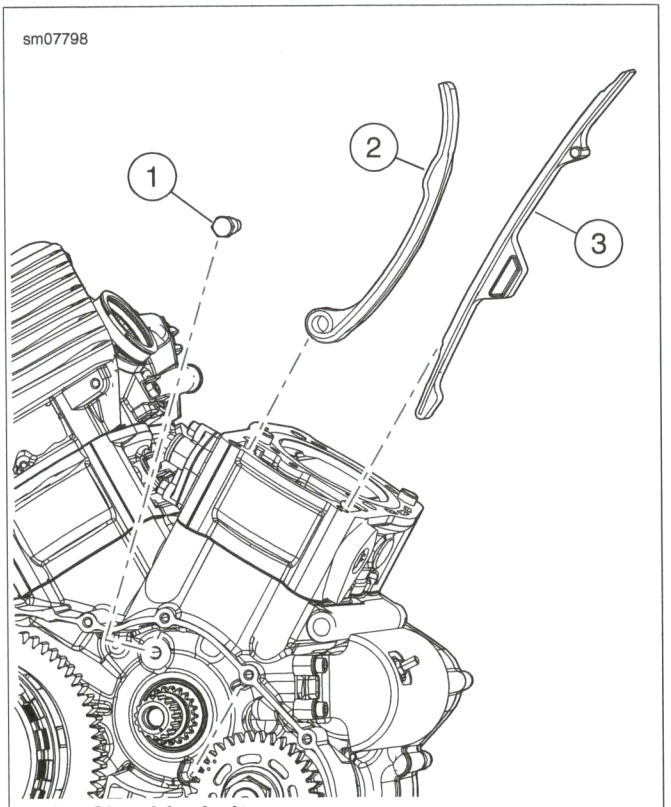

1. **Shoulder bolt**
2. **Slack side chain guide**
3. **Tension side chain guide**

Figure 4-22. Chain Guides

INSTALL

FASTENER	TORQUE VALUE	
Shoulder bolt	10.0-12.0 Nm	89-106 **in-lbs**

1. See Figure 4-22. Install slack side chain guide.
   a. Install slack side chain guide (2) through top of engine.
   b. Install shoulder bolt (1). Tighten to 10.0-12.0 Nm (89-106 **in-lbs**).
2. Install tension side chain guide (3) through top of engine.

CLEAN AND INSPECT

1. Clean all parts thoroughly.
2. Inspect chain guides for wear. Replace as necessary.

COMPLETE

1. Install cylinder head. See 4.14 CYLINDER HEADS.
2. Install cam sprocket and timing chain. See 4.13 CAMSHAFT SPROCKET AND TIMING CHAIN.
3. Install alternator. See 8.7 ALTERNATOR.
4. Install crankshaft gear. See 4.24 CRANKSHAFT GEAR.
5. Install clutch cover. See 4.22 CLUTCH COVER.

6. Install cylinder head covers. See 4.12 CYLINDER HEAD COVERS.
7. Install induction module. See 6.15 INDUCTION MODULE.
8. Install breather hoses. See 6.14 BREATHER HOSES.
9. Install air cleaner assembly. See 6.3 AIR CLEANER ASSEMBLY.
10. Install exhaust system. See 6.18 EXHAUST SYSTEM.
11. Secure rear of fuel tank. See 6.4 LIFT REAR OF FUEL TANK.
12. Connect negative battery cable. See 8.4 POWER DISCONNECT.
13. Install front belt guard. See 3.21 BELT GUARDS.

PREPARE

1. Remove front belt guard. See 3.21 BELT GUARDS.
2. Disconnect negative battery cable. See 8.4 POWER DISCONNECT.
3. Lift rear of fuel tank. See 6.4 LIFT REAR OF FUEL TANK.
4. Remove exhaust system. See 6.18 EXHAUST SYSTEM.
5. Remove air cleaner assembly. See 6.3 AIR CLEANER ASSEMBLY.
6. Remove breather hoses. See 6.14 BREATHER HOSES.
7. Remove induction module. See 6.15 INDUCTION MODULE.
8. Remove coolant hoses. See 7.9 COOLANT HOSES.
9. Remove cylinder head covers. See 4.12 CYLINDER HEAD COVERS.
10. Remove clutch cover. See 4.22 CLUTCH COVER.
11. Remove crankshaft gear. See 4.24 CRANKSHAFT GEAR.
12. Remove alternator. See 8.7 ALTERNATOR.
13. Remove cam sprocket and timing chain. See 4.13 CAMSHAFT SPROCKET AND TIMING CHAIN.
14. Remove cylinder head. See 4.12 CYLINDER HEAD COVERS.
15. Remove chain guides. See 4.18 CHAIN GUIDE.

REMOVE

1. See Figure 4-23. Remove cylinder block assembly.
   a. Remove cylinder block assembly (1) from dowel pins (5).
   b. Discard cylinder gasket (2).

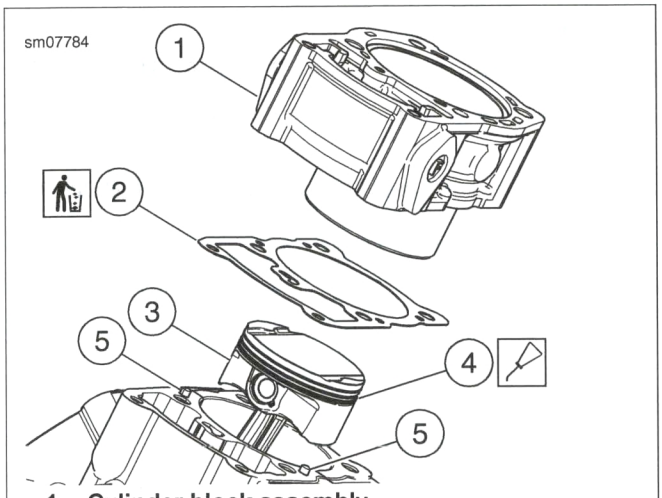

1. **Cylinder block assembly**
2. **Cylinder gasket**
3. **Piston**
4. **Piston rings**
5. **Dowel pins**

Figure 4-23. Cylinder Block Assembly

INSTALL

1. See Figure 4-23. Install cylinder gasket.
   a. Install **new** gasket (2) with the small center hole aligned with the oil passage in the crankcase.
2. Verify piston ring alignment. See 4.20 PISTONS.
3. Install cylinder block assembly.
   a. Lubricate cylinder liner bore with **new** engine oil.
   b. Support piston (3).
   c. Slide cylinder block assembly (1) over piston and piston rings (4).
   d. Install cylinder block assembly onto dowel pins (5).

DISASSEMBLE

PART NUMBER	TOOL NAME
HD-51459	CYLINDER LINER REMOVER AND INSTALLER TC18

NOTE

Mark liner and cylinder before removal to aid placement during installation.

1. See Figure 4-24. Remove cylinder liner.
   a. Use CYLINDER LINER REMOVER AND INSTALLER TC18 (Part No. HD-51459) to remove cylinder liner (1) from cylinder (5).
   b. Discard cylinder liner O-rings (4).
2. Remove coolant sleeve.
   a. Remove screw (8).
   b. Remove coolant sleeve (7).
   c. Discard coolant sleeve O-ring (6).

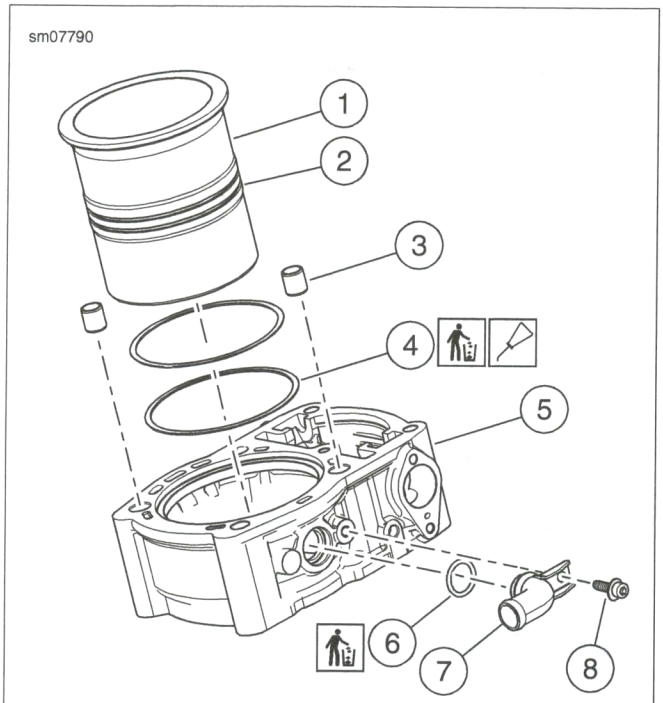

1. **Cylinder liner**
2. **O-ring groove (2)**
3. **Dowel pins (2)**
4. **Cylinder liner O-ring (2)**
5. **Cylinder**
6. **Coolant sleeve O-ring**
7. **Coolant sleeve**
8. **Screw**

Figure 4-24. Cylinder Block Assembly

CLEAN AND INSPECT

1. Clean all parts thoroughly.
2. Inspect cylinder liner for wear. Replace as necessary.
3. Inspect cylinder block for corrosion or cracking. Clean or replace as necessary.
4. Inspect coolant sleeve for corrosion or damage. Replace as necessary.

ASSEMBLE

PART NUMBER	TOOL NAME
HD-51459	CYLINDER LINER REMOVER AND INSTALLER TC18

FASTENER	TORQUE VALUE	
Coolant sleeve screw	10.0-12.0 Nm	89-106 **in-lbs**

NOTES

- *Cylinder liners and pistons are supplied as a matched set. Replace both items.*
- *Front and rear matched pistons and cylinder liners are not interchangeable.*

1. See Figure 4-24. Install coolant sleeve.
   a. Install **new** O-ring (6).
   b. Install coolant sleeve (7).
   c. Install screw (8). Tighten to 10.0-12.0 Nm (89-106 **in-lbs**).
2. Install cylinder liner.
   a. Lubricate **new** cylinder liner O-rings (4) with **new** engine oil.
   b. Install **new** cylinder liner O-rings to grooves (2) in cylinder liner (1).

NOTE

Do not damage O-ring when installing liner.

   c. Use CYLINDER LINER REMOVER AND INSTALLER TC18 (Part No. HD-51459) to install cylinder liner in cylinder (5).
   d. Verify that the O-rings are not twisted.

COMPLETE

1. Install chain guides. See 4.18 CHAIN GUIDE.
2. Install cylinder head. See 4.14 CYLINDER HEADS.
3. Install cam sprocket and timing chain. See 4.13 CAMSHAFT SPROCKET AND TIMING CHAIN.
4. Install alternator. See 8.7 ALTERNATOR.
5. Install crankshaft gear. See 4.24 CRANKSHAFT GEAR.
6. Install clutch cover. See 4.22 CLUTCH COVER.
7. Install cylinder head covers. See 4.12 CYLINDER HEAD COVERS.
8. Install coolant hoses. See 7.9 COOLANT HOSES.
9. Install induction module. See 6.15 INDUCTION MODULE.
10. Install breather hoses. See 6.14 BREATHER HOSES.
11. Install air cleaner assembly. See 6.3 AIR CLEANER ASSEMBLY.
12. Install exhaust system. See 6.18 EXHAUST SYSTEM.
13. Secure rear of fuel tank. See 6.4 LIFT REAR OF FUEL TANK.
14. Connect negative battery cable. See 8.4 POWER DISCONNECT.
15. Install front belt guard. See 3.21 BELT GUARDS.

PREPARE

1. Remove front belt guard. See 3.21 BELT GUARDS.
2. Disconnect negative battery cable. See 8.4 POWER DISCONNECT.
3. Lift rear of fuel tank. See 6.4 LIFT REAR OF FUEL TANK.
4. Remove exhaust system. See 6.18 EXHAUST SYSTEM.
5. Remove air cleaner assembly. See 6.3 AIR CLEANER ASSEMBLY.
6. Remove breather hoses. See 6.14 BREATHER HOSES.
7. Remove induction module. See 6.15 INDUCTION MODULE.
8. Remove cylinder head covers. See 4.12 CYLINDER HEAD COVERS.
9. Remove clutch cover. See 4.22 CLUTCH COVER.
10. Remove crankshaft gear. See 4.24 CRANKSHAFT GEAR.
11. Remove alternator. See 8.7 ALTERNATOR.
12. Remove cam sprocket and timing chain. See 4.13 CAMSHAFT SPROCKET AND TIMING CHAIN.
13. Remove cylinder head. See 4.14 CYLINDER HEADS.
14. Remove chain guides. See 4.18 CHAIN GUIDE.
15. Remove cylinder. See 4.19 CYLINDERS.

REMOVE

NOTICE

Handle piston with extreme care. The alloy used in these pistons is very hard. Any scratches, gouges or other marks in the pistons could score the cylinder during engine operation and cause engine damage. (00546b)

1. See Figure 4-25. Remove piston.
   a. Remove circlip (4).
   b. Remove piston pin (6).
   c. Remove piston (8) from connecting rod (7).

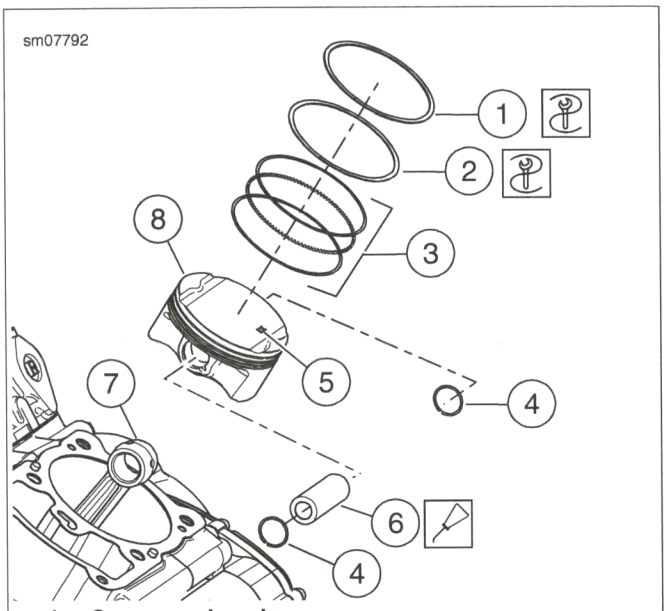

1. **Compression ring**
2. **Tapered ring**
3. **Three-piece oil control ring**
4. **Circlip (2)**
5. **EX markings**
6. **Piston pin**
7. **Connecting rod**
8. **Piston**

Figure 4-25. Piston

INSTALL

NOTICE

Handle piston with extreme care. The alloy used in these pistons is very hard. Any scratches, gouges or other marks in the pistons could score the cylinder during engine operation and cause engine damage. (00546b)

1. See Figure 4-26. Install circlip on one side of piston.
   a. Install piston circlip (1).
   b. Verify circlip end gap (3) is not aligned with piston cut-out (2).

NOTE

Verify EX (exhaust) markings are oriented to the exhaust port of an assembled engine.

2. See Figure 4-25. Install piston.
   a. Position piston (8) on connecting rod (7) so EX markings (5) are aligned to the exhaust port of an assembled engine.
   b. Lubricate piston pin (6) with oil and install piston pin.
   c. Install circlip (4).
   d. Verify smooth movement of the piston and piston pin on the connecting rod.

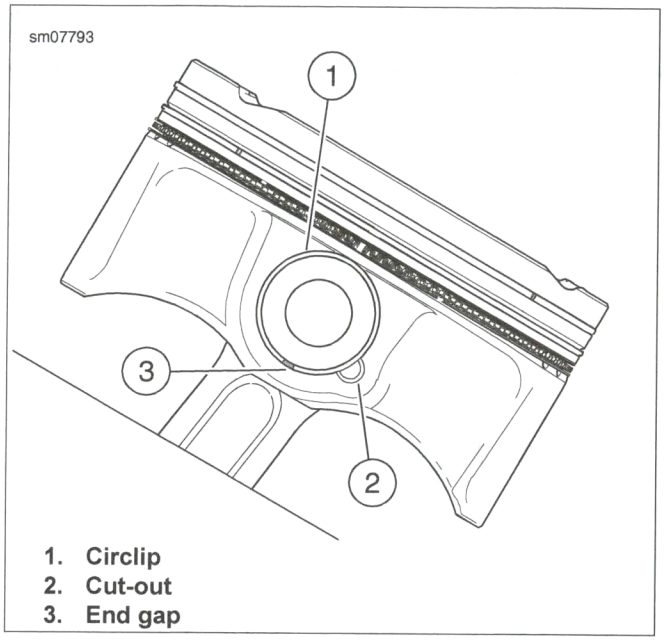

1. **Circlip**
2. **Cut-out**
3. **End gap**

Figure 4-26. Piston Circlip

DISASSEMBLE

1. See Figure 4-25. Remove piston rings.
   a. Remove compression ring (1).
   b. Remove tapered ring (2).
   c. Remove three-piece oil control ring (3).

CLEAN AND INSPECT

1. Clean all parts thoroughly.
2. Clean piston.
   a. Clean piston head.
   b. Clean ring grooves.
   c. Clean piston body.
3. Inspect all parts for wear.
   a. Inspect piston for damage or wear. Replace as necessary.
   b. Measure piston pin diameter. Compare to specifications. Refer to Table 4-10.

CHECK PISTON RING GAP

NOTES

- *Always use **new** piston rings. Piston rings take a definite set and must not be reused if the engine has been operated. Always deglaze (or hone) the cylinder before installing **new** rings.*
- *Insufficient ring gap may cause the ends to abut at operating temperatures. This will result in ring breakage, cylinder scuffing and/or piston seizure.*
- *Excessive ring gap results in high oil consumption and blow-by of exhaust gases. Blow-by contaminates the oil supply and leaves sludge in the crankcase. It also reduces engine efficiency by weakening the combustion seal necessary for efficient transfer of energy to the piston.*
- *Ring end gap dimensions also apply to oversize rings. Replace ring if end gap exceeds specification. If end gap is under specification, filing is permissible.*

1. See Figure 4-27. Check ring end gap of each ring before installing piston.
   a. Insert piston upside down into top of cylinder and apply even downward force to align piston.
   b. Measure the ring end gap with a feeler gauge. Refer to Table 4-9 for specifications.

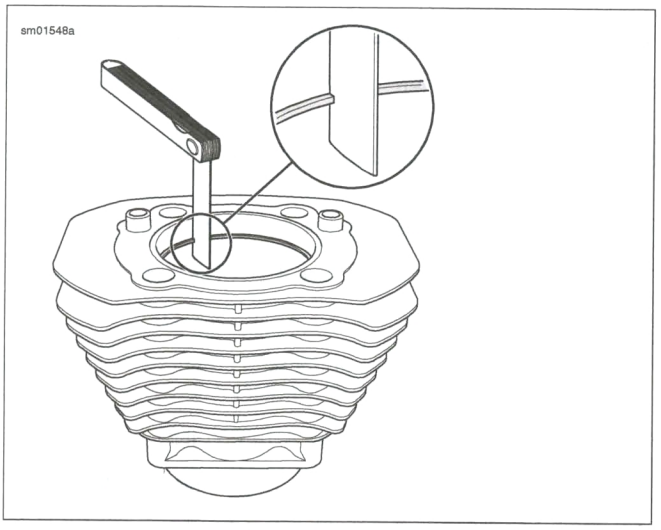

Figure 4-27. Check Piston Ring End Gap

ASSEMBLE

1. See Figure 4-28. Install three-piece oil control ring.
   a. Install lower side rail (5).
   b. Install spacer ring (4).
   c. Install upper side rail (3).

NOTE

Verify that the TOP markings on the taper and compression rings are aligned to the top of the piston.

2. Install tapered ring (2).
3. Install compression ring (1).
4. Verify that all piston rings rotate freely.
5. See Figure 4-29. Verify that all gaps are positioned as shown before installing piston.
   a. Rotate spacer ring so that the end gap (1) is aligned with piston pin hole (4).
   b. Rotate lower side rail so that the end gap (6) is 45 degrees right of the piston pin hole.
   c. Rotate upper side rail so that the end gap (2) is 45 degrees left of the piston pin hole.
   d. Rotate tapered ring so that the end gap (3) is 120 degrees left of the piston pin hole.
   e. Rotate compression ring so that the end gap (5) is 120 degrees right of the piston pin hole.

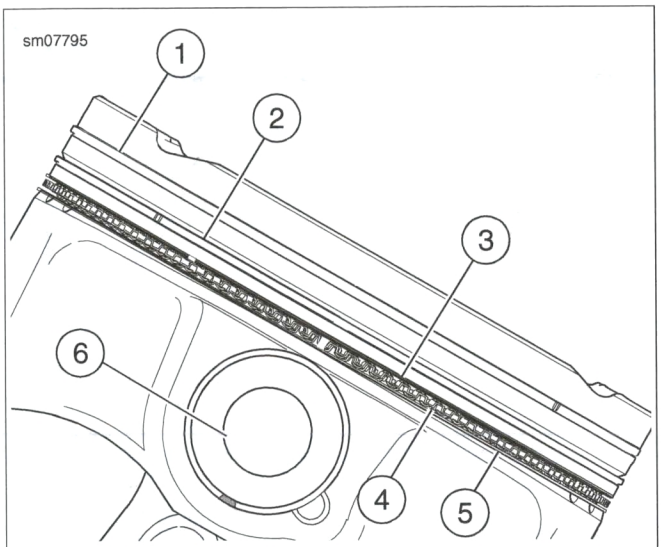

1. **Compression ring**
2. **Tapered ring**
3. **Upper side rail**
4. **Spacer ring**
5. **Lower side rail**
6. **Piston pin hole**

Figure 4-28. Piston Rings

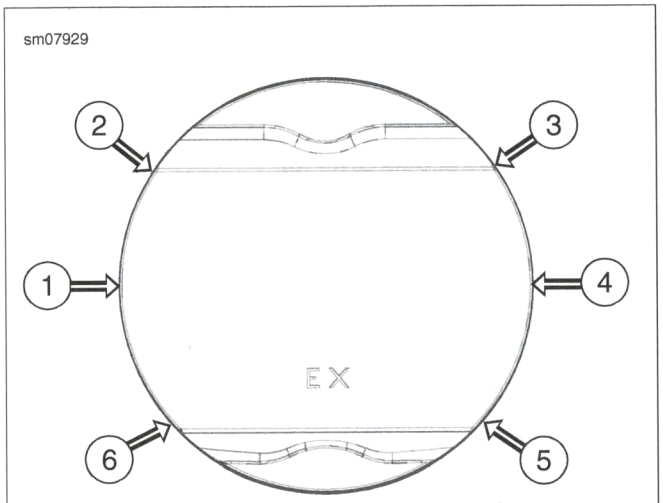

1. **Spacer ring end gap**
2. **Upper side rail end gap**
3. **Tapered ring end gap**
4. **Piston pin hole**
5. **Compression ring end gap**
6. **Lower side rail end gap**

Figure 4-29. Piston Ring End Gaps

COMPLETE

1. Install cylinder. See 4.19 CYLINDERS.
2. Install chain guides. See 4.18 CHAIN GUIDE.
3. Install cylinder head. See 4.14 CYLINDER HEADS.
4. Install cam sprocket and timing chain. See 4.13 CAMSHAFT SPROCKET AND TIMING CHAIN.
5. Install alternator. See 8.7 ALTERNATOR.
6. Install crankshaft gear. See 4.24 CRANKSHAFT GEAR.
7. Install clutch cover. See 4.22 CLUTCH COVER.
8. Install cylinder head covers. See 4.12 CYLINDER HEAD COVERS.
9. Install intake manifold. See 6.15 INDUCTION MODULE.
10. Install breather hoses. See 6.14 BREATHER HOSES.
11. Install air cleaner assembly. See 6.3 AIR CLEANER ASSEMBLY.
12. Install exhaust system. See 6.18 EXHAUST SYSTEM.
13. Secure rear of fuel tank. See 6.4 LIFT REAR OF FUEL TANK.
14. Connect negative battery cable. See 8.4 POWER DISCONNECT.
15. Install front belt guard. See 3.21 BELT GUARDS.

PREPARE

1. Remove front belt guard. See 3.21 BELT GUARDS.
2. Disconnect negative battery cable. See 8.4 POWER DISCONNECT.
3. Disconnect stator and CKP connectors from regulator. See 8.8 VOLTAGE REGULATOR.

REMOVE

1. See Figure 4-30. Remove alternator cover.
   a. Remove screws (3).
   b. Remove alternator cover (2).
2. Discard gasket (1).

INSTALL

FASTENER	TORQUE VALUE	
Alternator cover screws	10.0-12.0 Nm	89-106 **in-lbs**

1. See Figure 4-30. Install **new** gasket (1).
2. Install alternator cover.
   a. Install alternator cover (2).
   b. Figure 4-31. Install screws. Tighten in order shown to 10.0-12.0 Nm (89-106 **in-lbs**).

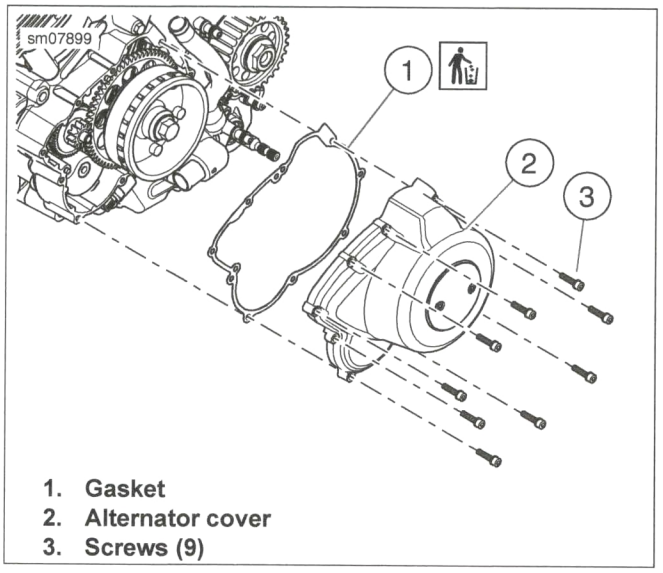

1. **Gasket**
2. **Alternator cover**
3. **Screws (9)**

Figure 4-30. Alternator Cover

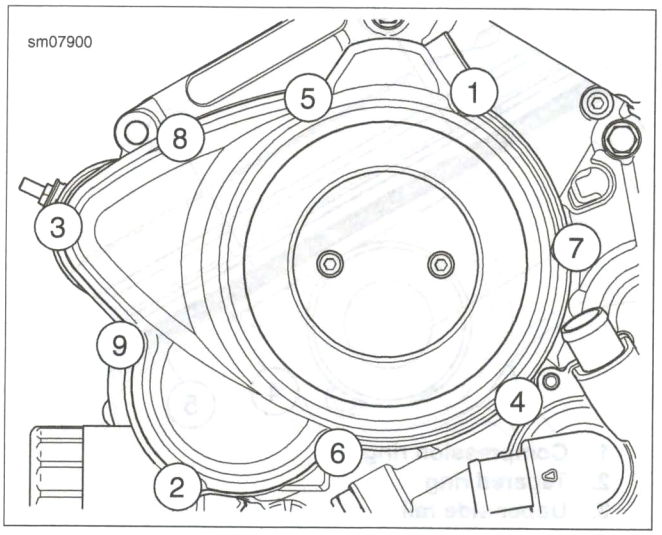

Figure 4-31. Tightening Sequence

DISASSEMBLE

NOTE

Crankshaft position sensor (CKP) and stator are serviced as an assembly.

1. See Figure 4-32. Remove access cover.
   a. Remove screws (9).
   b. Remove access cover (8).
   c. Discard O-ring (7).
2. Remove stator.
   a. Pull rubber boot (4) from alternator cover.
   b. Remove crankshaft position sensor screws (2).
   c. Remove stator screws (1).
   d. Remove stator (5).

ASSEMBLE

FASTENER	TORQUE VALUE	
Alternator stator screws	10.0-12.0 Nm	89-106 **in-lbs**
Crankshaft position sensor screws	10.0-12.0 Nm	89-106 **in-lbs**
Alternator access cover screws	10.0-12.0 Nm	89-106 **in-lbs**

1. See Figure 4-32. Install stator.
   a. Install stator (5).
   b. Install stator screws (1). Tighten to 10.0-12.0 Nm (89-106 **in-lbs**).
   c. Install crankshaft position sensor screws (2). Tighten to 10.0-12.0 Nm (89-106 **in-lbs**).
   d. Attach rubber boot (4) to alternator cover.

2. Install access cover.
   a. Install **new** O-ring (7).
   b. Install access cover (8).
   c. Install access cover screws (9). Tighten to 10.0-12.0 Nm (89-106 **in-lbs**).

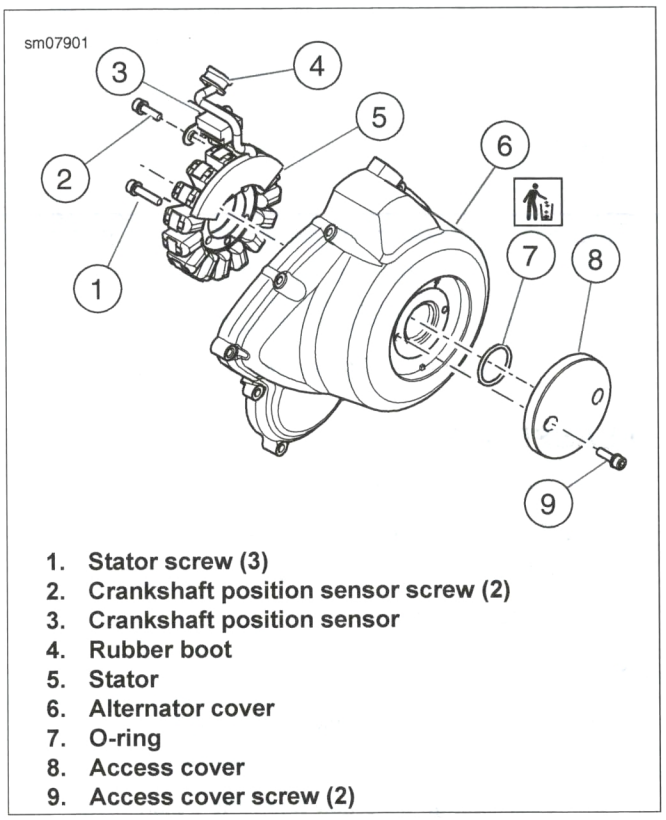

1. **Stator screw (3)**
2. **Crankshaft position sensor screw (2)**
3. **Crankshaft position sensor**
4. **Rubber boot**
5. **Stator**
6. **Alternator cover**
7. **O-ring**
8. **Access cover**
9. **Access cover screw (2)**

Figure 4-32. Alternator Cover Assembly

COMPLETE

1. Connect stator and CKP connectors to regulator. See 8.8 VOLTAGE REGULATOR.
2. Connect negative battery cable. See 8.4 POWER DISCONNECT.
3. Install front belt guard. See 3.21 BELT GUARDS.

PREPARE

1. Remove negative battery cable. 8.4 POWER DISCONNECT.
2. Drain engine oil. See 2.5 REPLACE ENGINE OIL AND FILTER.
3. Remove exhaust. See 6.18 EXHAUST SYSTEM.
4. Remove right footrest and rear brake pedal assembly. See 3.34 RIDER FOOT CONTROLS.
5. Detach clutch cable from clutch cover. See 3.23 CLUTCH CONTROL.

REMOVE

1. See Figure 4-33. Remove clutch cover.
   a. Remove screws (3).
   b. Remove clutch cover (2).
2. Discard gasket (1).

INSTALL

FASTENER	TORQUE VALUE	
Clutch cover screws	10.0-12.0 Nm	89-106 **in-lbs**

1. See Figure 4-33. Install **new** gasket (1).
2. Install clutch cover.
   a. Install cable bracket (4).
   b. See Figure 4-34. Install screws. Tighten in order shown to 10.0-12.0 Nm (89-106 **in-lbs**).

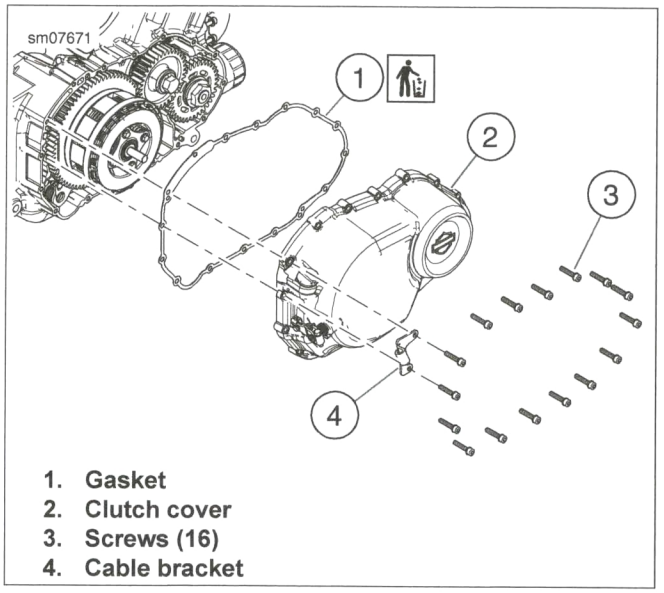

1. **Gasket**
2. **Clutch cover**
3. **Screws (16)**
4. **Cable bracket**

Figure 4-33. Clutch Cover

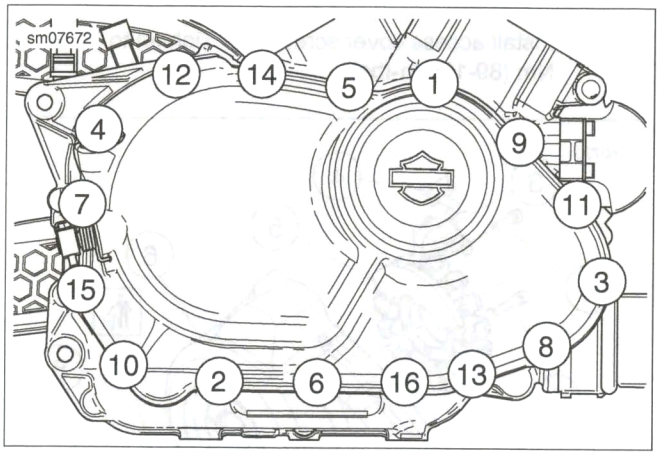

Figure 4-34. Tightening Sequence

DISASSEMBLE

1. See Figure 4-35. Remove clutch actuator.
2. See Figure 4-36. Remove linkage assembly.
   a. Remove linkage assembly.
   b. Discard O-ring (2).

ASSEMBLE

1. See Figure 4-36. Insert linkage assembly.
   a. Install **new** O-ring (2) in groove (1).
   b. Slide linkage assembly shaft into clutch cover.
2. See Figure 4-37. Position spring end as shown.
3. See Figure 4-35. Insert clutch actuator. Rotate linkage assembly until actuator fits within cutout in shaft.

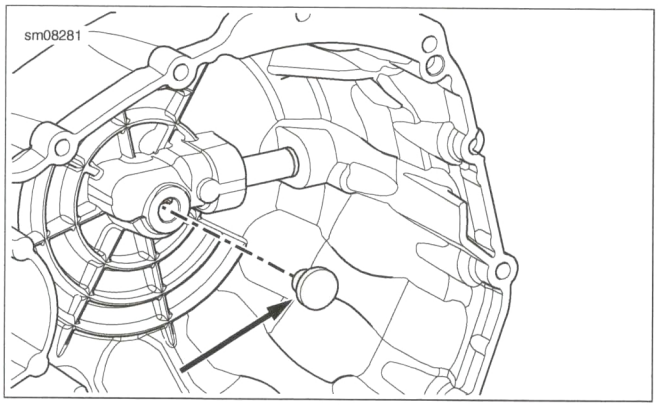

Figure 4-35. Clutch Actuator

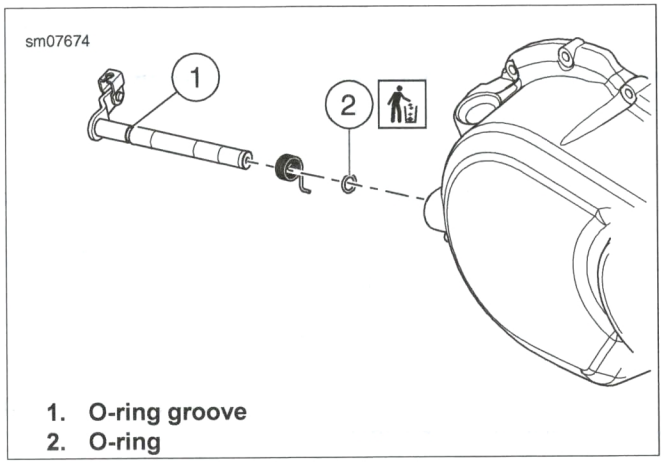

1. O-ring groove
2. O-ring

Figure 4-36. Clutch Linkage

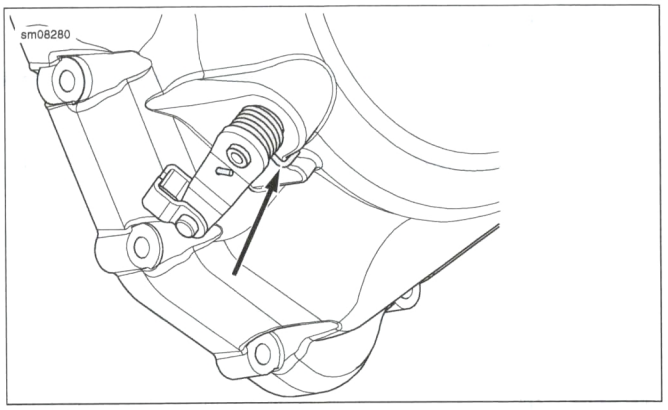

Figure 4-37. Spring End

COMPLETE

1. Attach clutch cable to clutch cover. See 4.22 CLUTCH COVER.
2. Fill engine with oil. See 2.5 REPLACE ENGINE OIL AND FILTER.
3. Install right footrest and rear brake pedal assembly. See 3.34 RIDER FOOT CONTROLS.
4. Install exhaust. See 6.18 EXHAUST SYSTEM.
5. Install negative battery cable. 8.4 POWER DISCONNECT.

PREPARE

1. Remove negative battery cable. See 8.4 POWER DISCONNECT.
2. Remove alternator cover. See 4.21 ALTERNATOR COVER.
3. Remove alternator. See 8.7 ALTERNATOR.
4. Remove clutch cover. See 4.22 CLUTCH COVER.

REMOVE

1. See Figure 4-38. Remove balancer shaft.
   a. Remove nut (1).
   b. Remove gear assembly (3).
   c. Remove key (2), if necessary.
   d. Remove balancer shaft (4).
2. See Figure 4-39. Remove bearing.
   a. Remove screws (1).
   b. Remove retainer (2).
   c. Remove bearing (3).

INSTALL

PART NUMBER	TOOL NAME
HD-51441	COUNTERBALANCER PIN
HD-51461	SPRING GEAR ROTATION TOOL

FASTENER	TORQUE VALUE	
Balancer bearing retainer screws	10.0-12.0 Nm	89-106 **in-lbs**
Balancer shaft nut	160.0-170.0 Nm	118-126 ft-lbs

1. See Figure 4-39. Install bearing.
   a. Install bearing (3).
   b. Install retainer (2).
   c. Apply LOCTITE 243 MEDIUM STRENGTH THREADLOCKER AND SEALANT (blue) to screws (1).
   d. Install screws (1). Tighten to 10.0-12.0 Nm (89-106 **in-lbs**).
2. See Figure 4-38. Install balancer shaft.
   a. Install balancer shaft (4).
   b. Install key (2), if previously removed.
3. See Figure 4-38. Install balancer Gear.
   a. Place gear assembly (3) on balancer shaft (4).
   b. See Figure 4-40. Using SPRING GEAR ROTATION TOOL (Part No. HD-51461), rotate outer gear (2) clockwise until alignment hole (3) aligns with inner gear (1) alignment hole.
   c. Insert COUNTERBALANCER PIN (Part No. HD-51441) into alignment hole (3).
   d. See Figure 4-38. Install nut (1). Tighten to 160.0-170.0 Nm (118-126 ft-lbs).

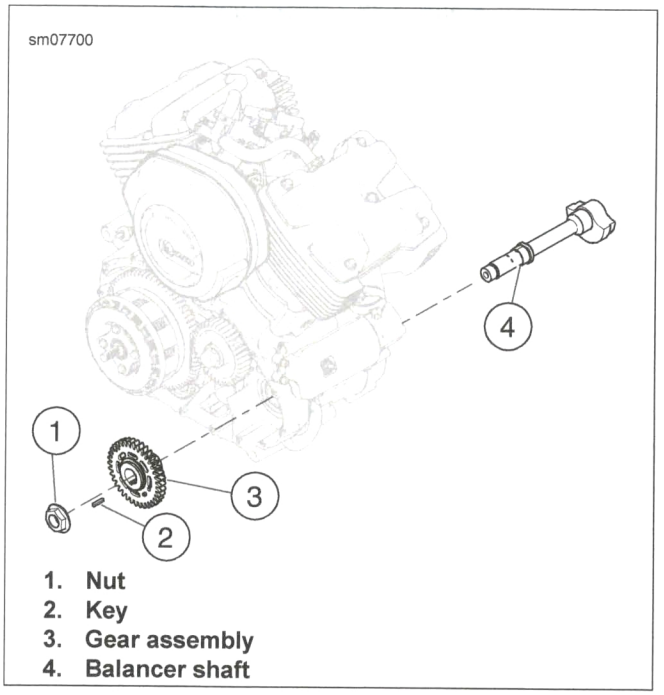

1. **Nut**
2. **Key**
3. **Gear assembly**
4. **Balancer shaft**

Figure 4-38. Balancer Shaft

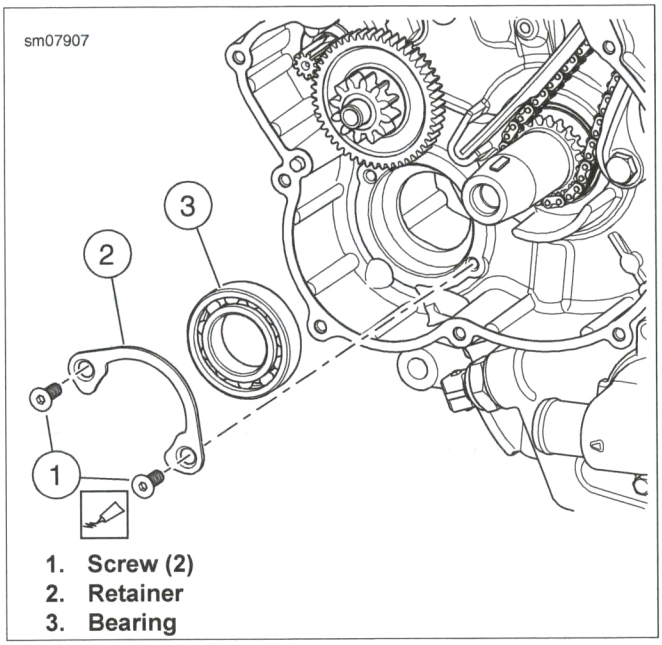

1. Screw (2)
2. Retainer
3. Bearing

Figure 4-39. Balancer Bearing

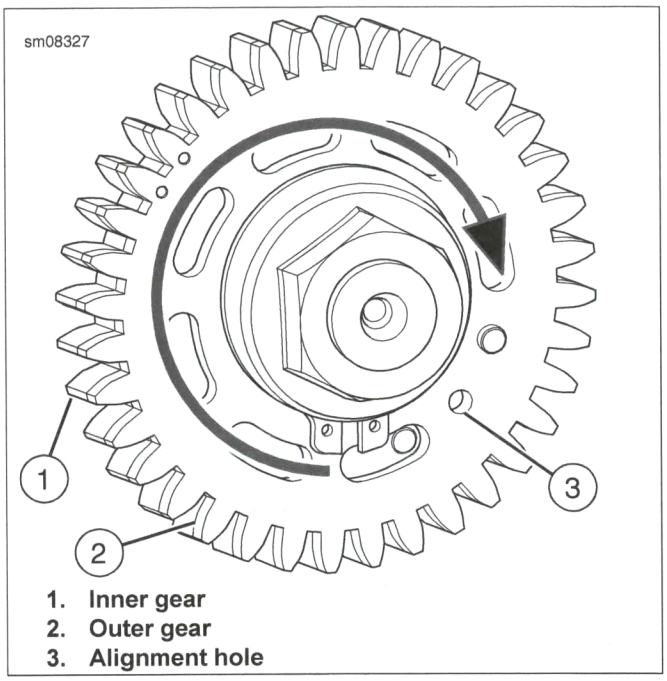

1. Inner gear
2. Outer gear
3. Alignment hole

Figure 4-40. Balancer Gear

COMPLETE

1. Install alternator. See 8.7 ALTERNATOR.
2. Install alternator cover. See 4.21 ALTERNATOR COVER.
3. Install clutch cover. See 4.22 CLUTCH COVER.
4. Install negative battery cable. See 8.4 POWER DISCONNECT.

PREPARE

1. Remove negative battery cable. See 4.22 CLUTCH COVER.
2. Remove clutch cover. See 4.22 CLUTCH COVER.

REMOVE

PART NUMBER	TOOL NAME
HD-51281	LOCKING TOOL

1. Install LOCKING TOOL (Part No. HD-51281).
2. See Figure 4-41. Remove crankshaft gear.
   a. Remove bolt (1) and washer (2).
   b. Remove crankshaft gear (3).

INSTALL

PART NUMBER	TOOL NAME
HD-51281	CRANKSHAFT LOCKING TOOL

FASTENER	TORQUE VALUE	
Crankshaft gear bolt	160.0-170.0 Nm	118-125 ft-lbs

1. See Figure 4-42. Align timing marks (1, 2).
2. See Figure 4-41. Install crankshaft gear.
   a. Install crankshaft gear (3).
   b. Install CRANKSHAFT LOCKING TOOL (Part No. HD-51281).
   c. Install washer (2) and bolt (1). Tighten to 160.0-170.0 Nm (118-125 ft-lbs).
3. Remove locking tool.

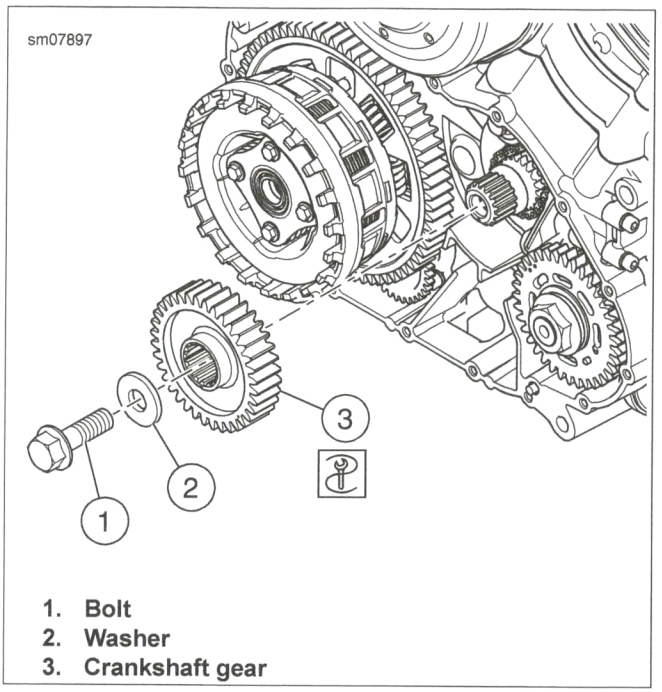

1. **Bolt**
2. **Washer**
3. **Crankshaft gear**

Figure 4-41. Crankshaft Gear

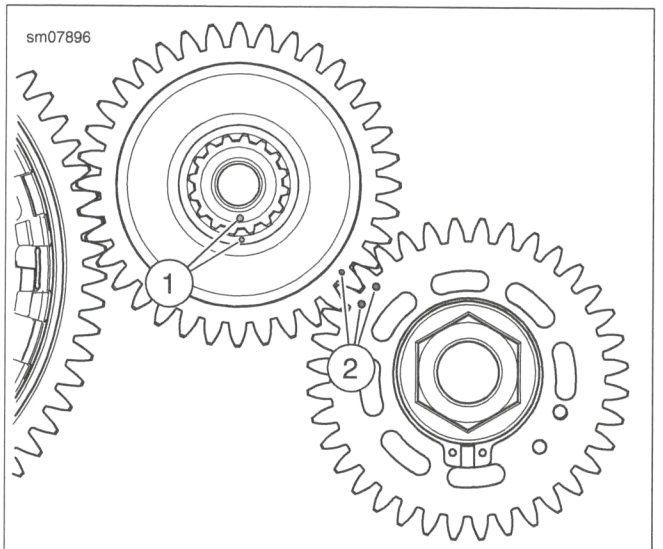

1. **Crankshaft timing marks**
2. **Balancer timing marks**

Figure 4-42. Crankshaft Gear Timing

COMPLETE

1. Install clutch cover. See 4.22 CLUTCH COVER.
2. Install negative battery cable. See 4.22 CLUTCH COVER.

PREPARE

1. Remove alternator cover. See 4.21 ALTERNATOR COVER.
2. Remove alternator. See 8.7 ALTERNATOR.

REMOVE

1. See Figure 4-43. Remove starter gear (2).
2. Remove shaft (1).

INSTALL

1. See Figure 4-43. Install shaft (1).
2. Install starter gear (2).

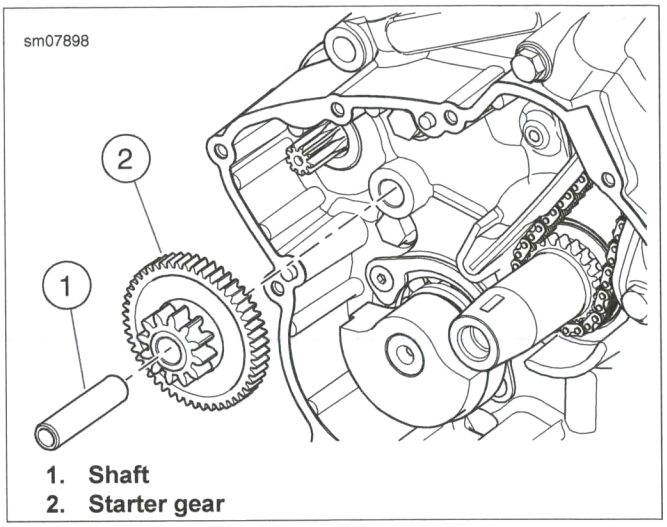

1. Shaft
2. Starter gear

Figure 4-43. Starter Gear

COMPLETE

1. Install alternator. See 8.7 ALTERNATOR.
2. Install alternator cover. See 4.21 ALTERNATOR COVER.

PREPARE

1. Remove exhaust system. See 6.18 EXHAUST SYSTEM.
2. Remove clutch. See 5.7 CLUTCH.

REMOVE

Oil Pump

NOTE

Oil pressure relief valve is located in oil pump. Oil pressure relief valve is not serviceable. Replace oil pump as necessary.

1. See Figure 4-44. Remove gear.
   a. Discard retaining ring (1).
   b. Remove gear (2).
   c. Remove gear pin (3).
2. Remove housing.
   a. Remove screws (6).
   b. Remove housing (7).
3. Remove oil pump assembly.
   a. Remove shaft (4), inner gerotor (8) and inner gerotor pin (5).
   b. Remove outer gerotor (9).

Oil Filter Adapter

1. See Figure 4-44. Remove oil filter adapter (10).

INSTALL

FASTENER	TORQUE VALUE	
Oil pump housing screws	10.0-12.0 Nm	89-106 **in-lbs**
Oil filter adapter	20.0-25.0 Nm	15-18 ft-lbs

Oil Pump

NOTE

The T marking on both the inner and outer gerotor must face the crankcase.

1. See Figure 4-44. Install oil pump.
   a. Install outer gerotor (9).
   b. Install inner gerotor pin (5) in shaft (4).
   c. Install inner gerotor (8) over inner gerotor pin (5).
   d. Install shaft and inner gerotor assembly in outer gerotor (9).
2. Install housing.
   a. Install housing (7).
   b. Install screws (6). Tighten to 10.0-12.0 Nm (89-106 **in-lbs**).
3. Install gear.
   a. Install pin (3).
   b. Install gear (2).
   c. Install **new** retaining ring (1).

Oil Filter Adapter

1. See Figure 4-44. Install oil filter adapter (10). Tighten to 20.0-25.0 Nm (15-18 ft-lbs).

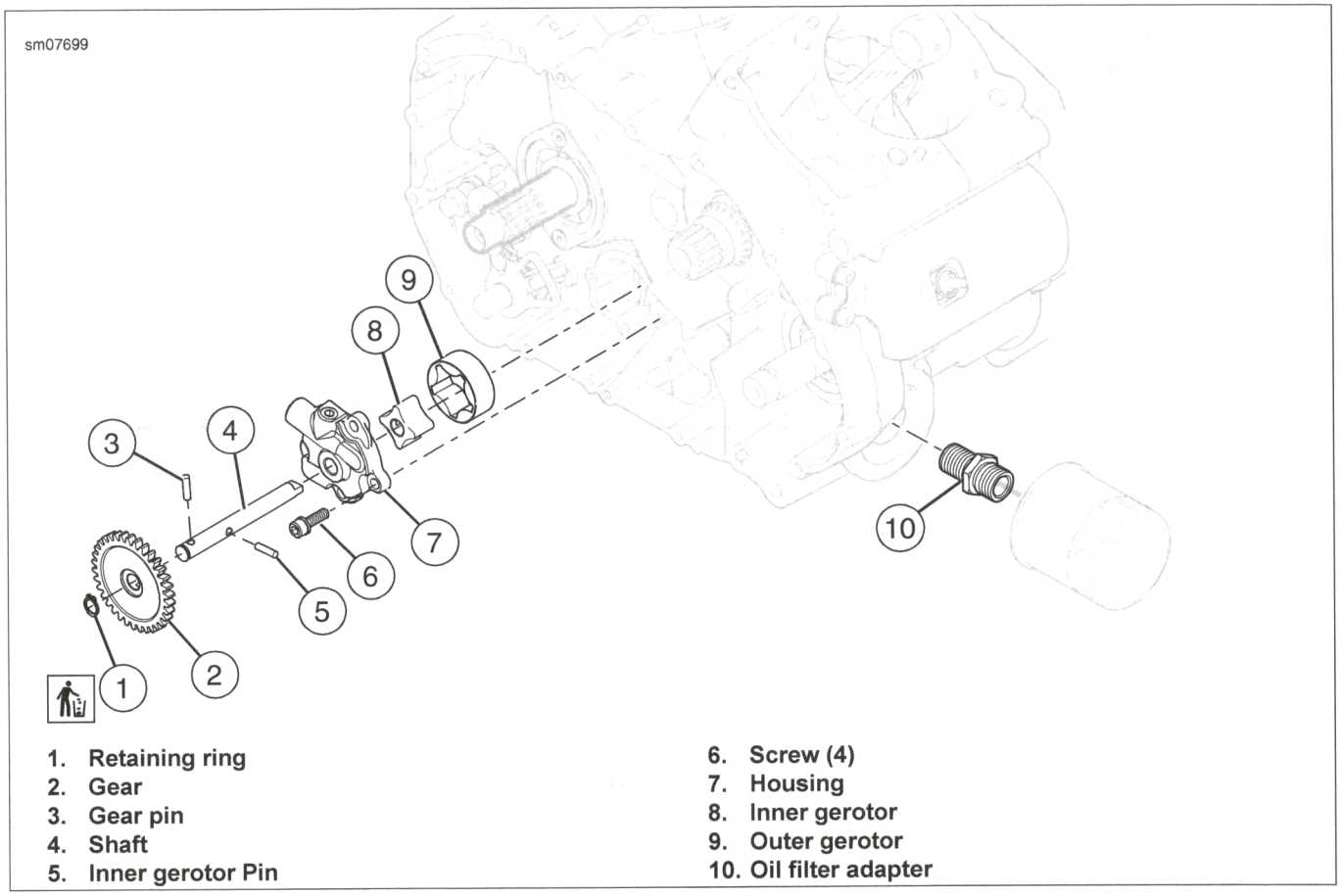

1. Retaining ring
2. Gear
3. Gear pin
4. Shaft
5. Inner gerotor Pin
6. Screw (4)
7. Housing
8. Inner gerotor
9. Outer gerotor
10. Oil filter adapter

Figure 4-44. Oil Pump Assembly

COMPLETE

1. Install clutch. See 5.7 CLUTCH.
2. Install exhaust system. See 6.18 EXHAUST SYSTEM.

PREPARE

1. Remove engine. See 4.9 REPLACE ENGINE.
2. Remove starter. See 8.5 STARTER.
3. Remove clutch. See 5.7 CLUTCH.
4. Remove cylinder head covers. See 4.12 CYLINDER HEAD COVERS.
5. Remove cylinder heads. See 4.14 CYLINDER HEADS.
6. Remove cylinders. See 4.19 CYLINDERS.
7. Remove balancer shaft. See 4.23 BALANCER.
8. Remove output pulley. See 5.5 OUTPUT PULLEY.
9. Separate crankcase. See 4.28 CRANKCASE ASSEMBLY.

REMOVE

1. See Figure 4-45. Remove oil strainer.
   a. Remove screws (3).
   b. Remove plate (2).
   c. Remove oil strainer (1).

INSTALL

FASTENER	TORQUE VALUE	
Oil strainer fasteners	10.0-12.0 Nm	89-106 **in-lbs**

1. See Figure 4-45. Install oil strainer.
   a. Install oil strainer (1).
   b. Install plate (2).
   c. Apply LOCTITE 243 MEDIUM STRENGTH THREADLOCKER AND SEALANT (blue) to screws (3).
   d. Install screws (3). Tighten to 10.0-12.0 Nm (89-106 **in-lbs**).

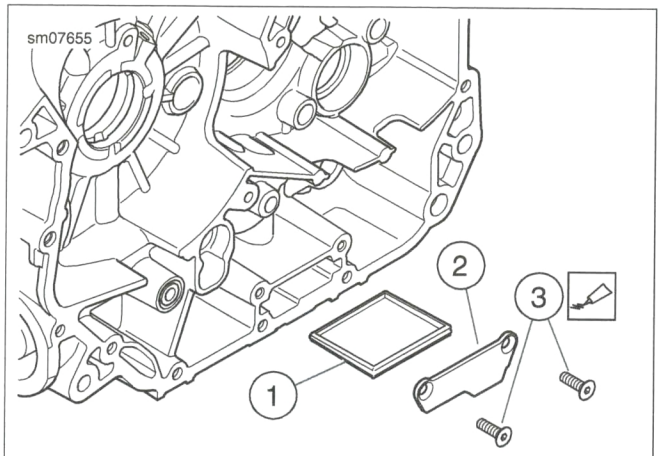

1. Oil strainer
2. Plate
3. Screw (2)

Figure 4-45. Oil Strainer

COMPLETE

1. Join crankcase halves. See 4.28 CRANKCASE ASSEMBLY.
2. Install output pulley. See 5.5 OUTPUT PULLEY.
3. Install balancer shaft. See 4.23 BALANCER.
4. Install cylinders. See 4.19 CYLINDERS.
5. Install cylinder heads. See 4.14 CYLINDER HEADS.
6. Install cylinder head covers. See 4.12 CYLINDER HEAD COVERS.
7. Install clutch. See 5.7 CLUTCH.
8. Install starter. See 8.5 STARTER.
9. Install engine. See 4.9 REPLACE ENGINE.

PREPARE

1. Remove engine. See 4.9 REPLACE ENGINE.
2. Remove starter. See 8.5 STARTER.
3. Remove clutch. See 5.7 CLUTCH.
4. Remove cylinder head covers. See 4.12 CYLINDER HEAD COVERS.
5. Remove cylinder heads. See 4.14 CYLINDER HEADS.
6. Remove cylinders. See 4.19 CYLINDERS.
7. Remove balancer shaft. See 4.23 BALANCER.
8. Remove output pulley. See 5.5 OUTPUT PULLEY.

DISASSEMBLE

⚠CAUTION

Do not rotate crankcase half in engine stand when flywheel is installed. The flywheel assembly can fall out, resulting in parts damage or moderate injury. (00552c)

1. Rotate crankcase clutch side down.
2. See Figure 4-47. Separate crankcase halves.
   a. Discard crankcase screws.
   b. Separate crankcase halves.

ASSEMBLE

FASTENER	TORQUE VALUE	
Crankcase M8 screws	20.0-25.0 Nm	15-18 lb-ft
Crankcase M6 screws	10.0-12.0 Nm	89-106 **in-lbs**

1. Secure right crankcase half in engine stand.
   a. Place clutch side down.
2. See Figure 4-46. Apply a (3-5 mm) (0.12-0.20 in) wide bead of HIGH-PERFORMANCE SEALANT, GRAY Part N0. 99650-02 (2) only in the areas shown.
3. Install left crankcase.
   a. Align crankcase on dowel pins (1).
4. See Figure 4-47. Install **new** crankcase fasteners. Tighten finger-tight.
   a. Long screws (1, 5).
   b. Medium screws (8, 11).
   c. Short screws (2-4, 6, 7, 9, 10, 12-16).
5. Tighten screws in sequence shown.
   a. M8 screws: 20.0-25.0 Nm (15-18 lb-ft).
   b. M6 screws: 10.0-12.0 Nm (89-106 **in-lbs**).

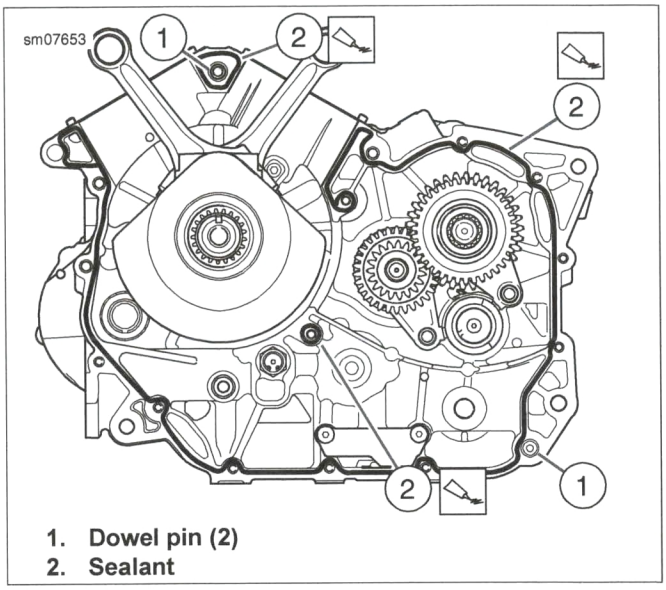

1. **Dowel pin (2)**
2. **Sealant**

Figure 4-46. Right Crankcase

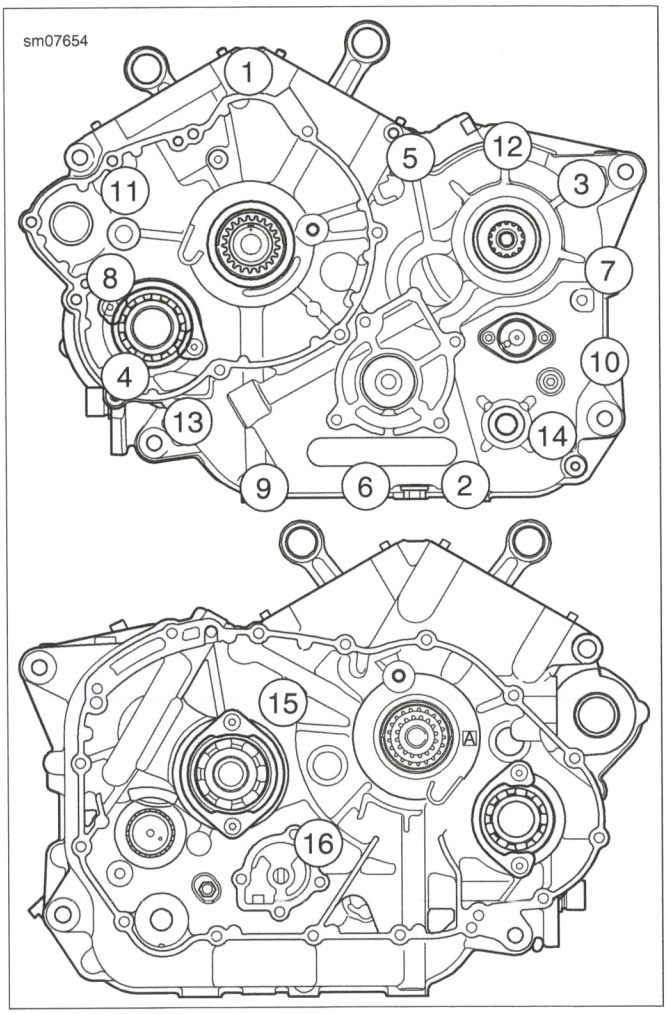

Figure 4-47. Crankcase Tightening Sequence

COMPLETE

1. Install output pulley. See 5.5 OUTPUT PULLEY.
2. Install balancer shaft. See 4.23 BALANCER.
3. Install cylinders. See 4.19 CYLINDERS.
4. Install cylinder heads. See 4.14 CYLINDER HEADS.
5. Install cylinder head covers. See 4.12 CYLINDER HEAD COVERS.
6. Install clutch. See 5.7 CLUTCH.
7. Install starter. See 8.5 STARTER.
8. Install engine. See 4.9 REPLACE ENGINE.

PREPARE

1. Remove engine. See 4.9 REPLACE ENGINE.
2. Remove starter. See 8.5 STARTER.
3. Remove clutch. See 5.7 CLUTCH.
4. Remove cylinder head covers. See 4.12 CYLINDER HEAD COVERS.
5. Remove cylinder heads. See 4.14 CYLINDER HEADS.
6. Remove cylinders. See 4.19 CYLINDERS.
7. Remove balancer shaft. See 4.23 BALANCER.
8. Remove output pulley. See 5.5 OUTPUT PULLEY.
9. Separate crankcase. See 4.28 CRANKCASE ASSEMBLY.

REMOVE

1. Secure crankcase on a press with crank side facing up.
   a. Center main bearing under press.
2. Remove bearing using the appropriate pilot/driver.

INSTALL

1. See Figure 4-49. Verify that **new** bearing is correct size. Refer to Table 4-26.
2. See Figure 4-48. Secure crankcase on a press with crank side facing up.
   a. Center main bearing bore under press.
   b. Place seams of bearing within five degrees of horizontal. Proper orientation is shown for left main bearing (1) and right main bearing (2).
3. Press bearing into place using appropriate bearing installer.

Table 4-26. Main Bearing Grade Table

	CRANKCASE CODE		
	A	B	C
Bearing Shell Color	Blue	Black	Red

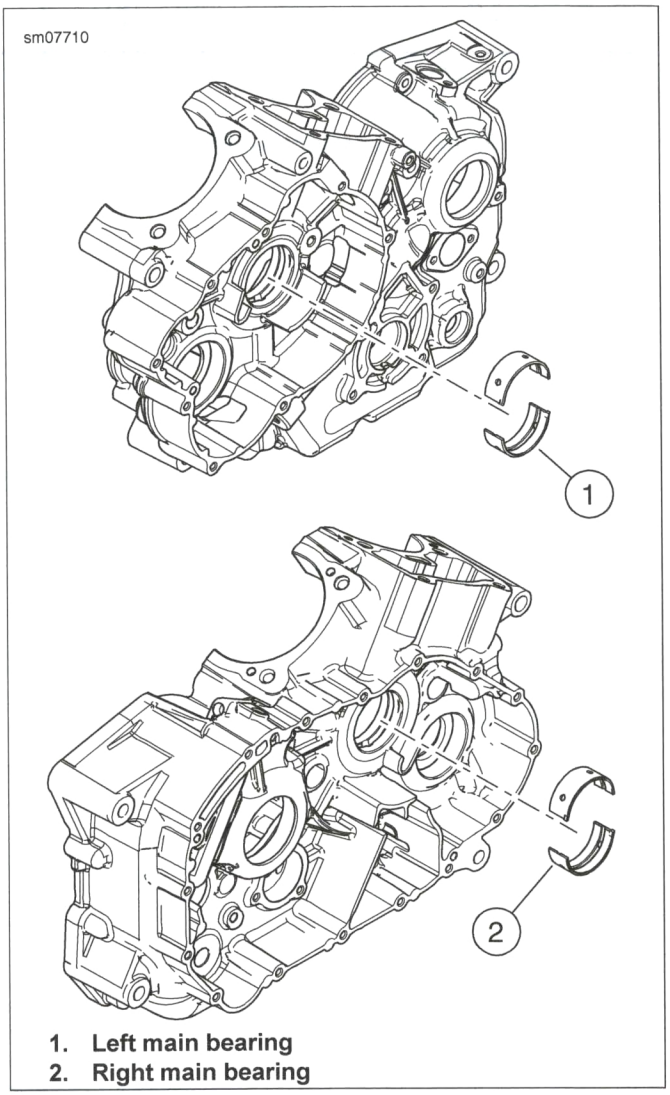

1. **Left main bearing**
2. **Right main bearing**

Figure 4-48. Crankcase Bearings

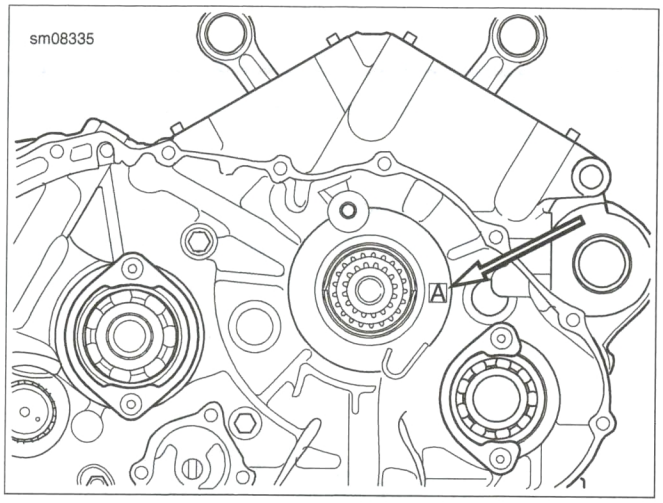

Figure 4-49. Main Bearing Code

COMPLETE

1. Join crankcase halves. See 4.28 CRANKCASE ASSEMBLY.
2. Install output pulley. See 5.5 OUTPUT PULLEY.
3. Install balancer shaft. See 4.23 BALANCER.
4. Install cylinders. See 4.19 CYLINDERS.
5. Install cylinder heads. See 4.14 CYLINDER HEADS.
6. Install cylinder head covers. See 4.12 CYLINDER HEAD COVERS.
7. Install clutch. See 5.7 CLUTCH.
8. Install starter. See 8.5 STARTER.
9. Install engine. See 4.9 REPLACE ENGINE.

PREPARE

1. Remove engine. See 4.9 REPLACE ENGINE.
2. Remove starter. See 8.5 STARTER.
3. Remove clutch. See 5.7 CLUTCH.
4. Remove cylinder head covers. See 4.12 CYLINDER HEAD COVERS.
5. Remove cylinder heads. See 4.14 CYLINDER HEADS.
6. Remove cylinders. See 4.19 CYLINDERS.
7. Remove balancer shaft. See 4.23 BALANCER.
8. Remove output pulley. See 5.5 OUTPUT PULLEY.
9. Separate crankcase. See 4.28 CRANKCASE ASSEMBLY.

REMOVE

1. See Figure 4-50. Remove nozzle.
   a. Remove screw (4).
   b. Remove plate (3).
   c. Remove nozzle (2).
   d. Discard O-ring (1).

INSTALL

FASTENER	TORQUE VALUE	
Oil nozzle screw	10.0-12.0 Nm	89-106 **in-lbs**

⚠WARNING

Compressed air can pierce the skin and flying debris from compressed air could cause serious eye injury. Wear safety glasses when working with compressed air. Never use your hand to check for air leaks or to determine air flow rates. (00061a)

NOTE

Clean nozzles with low-pressure compressed air as needed.

1. See Figure 4-50. Install nozzle.
   a. Install **new** O-ring (1).
   b. Install nozzle (2).
   c. Install plate (3).
   d. Apply LOCTITE 246 MEDIUM STRENGTH THREADLOCKER AND SEALANT (blue) to screw (4).
   e. Install screw (4). Tighten to 10.0-12.0 Nm (89-106 **in-lbs**).

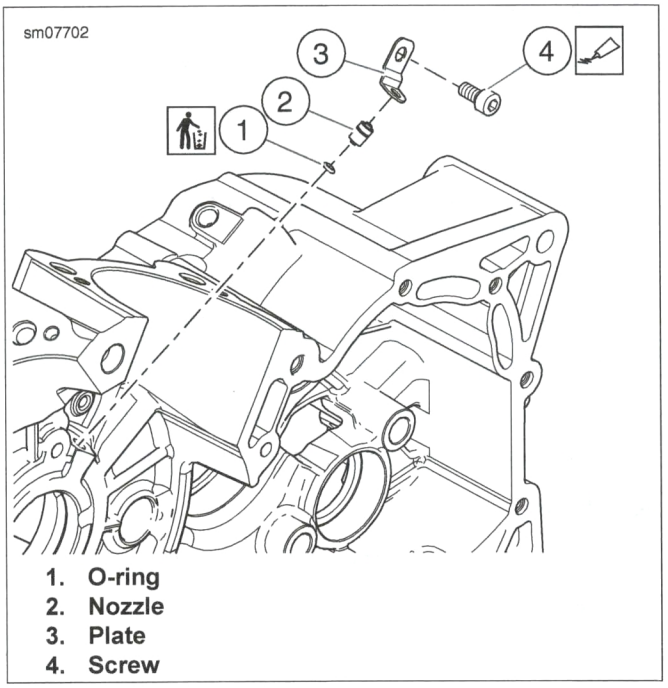

1. O-ring
2. Nozzle
3. Plate
4. Screw

Figure 4-50. Oil Nozzles

COMPLETE

1. Join crankcase halves. See 4.28 CRANKCASE ASSEMBLY.
2. Install output pulley. See 5.5 OUTPUT PULLEY.
3. Install balancer shaft. See 4.23 BALANCER.
4. Install cylinders. See 4.19 CYLINDERS.
5. Install cylinder heads. See 4.14 CYLINDER HEADS.
6. Install cylinder head covers. See 4.12 CYLINDER HEAD COVERS.
7. Install clutch. See 5.7 CLUTCH.
8. Install starter. See 8.5 STARTER.
9. Install engine. See 4.9 REPLACE ENGINE.

PREPARE

1. Remove engine. See 4.9 REPLACE ENGINE.
2. Remove starter. See 8.5 STARTER.
3. Remove clutch. See 5.7 CLUTCH.
4. Remove cylinder head covers. See 4.12 CYLINDER HEAD COVERS.
5. Remove cylinder heads. See 4.14 CYLINDER HEADS.
6. Remove cylinders. See 4.19 CYLINDERS.
7. Remove balancer shaft. See 4.23 BALANCER.
8. Remove output pulley. See 5.5 OUTPUT PULLEY.
9. Separate crankcase. See 4.28 CRANKCASE ASSEMBLY.

REMOVE

1. See Figure 4-51. Discard oil pressure switch (1).
2. Remove restrictor plug (2).
3. See Figure 4-53. Remove plugs (2,3).
4. Remove restrictor plug (1).

INSTALL

FASTENER	TORQUE VALUE	
Restrictor plug	20.0-25.0 Nm	15-18 ft-lbs
Oil pressure switch	10.0-12.0 Nm	89-106 **in-lbs**
Oil strainer cavity plug	20.0-25.0 Nm	15-18 ft-lbs
Restrictor plug	20.0-25.0 Nm	15-18 ft-lbs
Oil passage plug	20.0-25.0 Nm	15-18 ft-lbs

1. See Figure 4-51. Install restrictor plug (1).
   a. Tighten to 20.0-25.0 Nm (15-18 ft-lbs).
   b. See Figure 4-52. Verify that restrictor plug clears oil passage.
2. See Figure 4-51. Install **new** oil pressure switch (1).
   a. Tighten to 10.0-12.0 Nm (89-106 **in-lbs**).
3. Install oil strainer cavity plug (5).
   a. Tighten to 20.0-25.0 Nm (15-18 ft-lbs).
4. Install restrictor plug (2).
   a. Tighten to 20.0-25.0 Nm (15-18 ft-lbs).
   b. See Figure 4-52. Verify that restrictor plug clears oil passage.
5. See Figure 4-53. Install plug (3).
   a. Tighten to 20.0-25.0 Nm (15-18 ft-lbs).

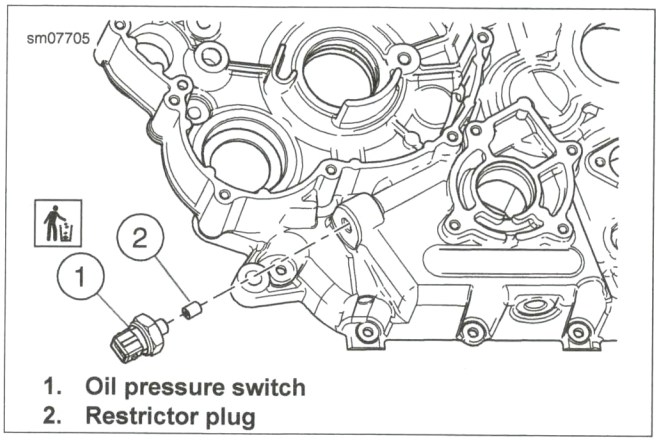

1. Oil pressure switch
2. Restrictor plug

Figure 4-51. Left Crankcase Plugs

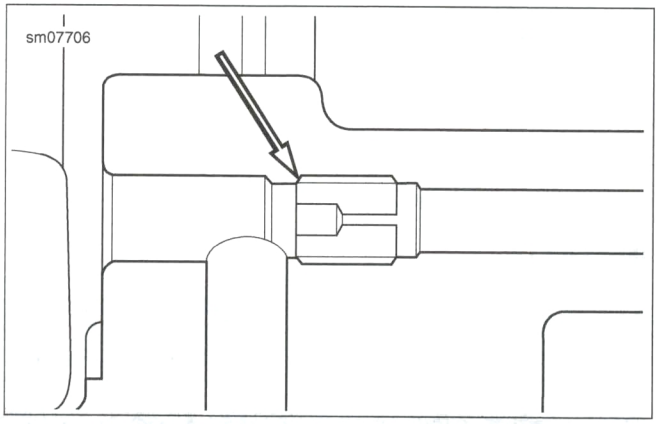

Figure 4-52. Oil Passage

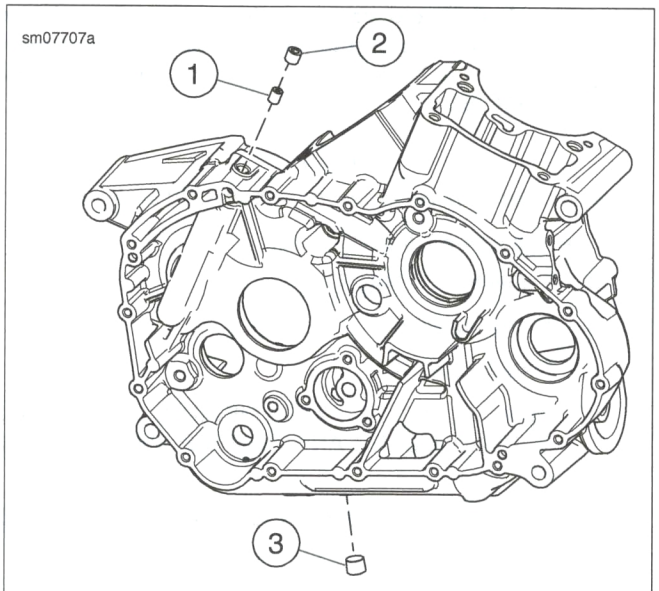

1. Restrictor plug
2. Plug
3. Plug

Figure 4-53. Right Crankcase Plugs

COMPLETE

1. Join crankcase halves. See 4.28 CRANKCASE ASSEMBLY.
2. Install output pulley. See 5.5 OUTPUT PULLEY.
3. Install balancer shaft. See 4.23 BALANCER.
4. Install cylinders. See 4.19 CYLINDERS.
5. Install cylinder heads. See 4.14 CYLINDER HEADS.
6. Install cylinder head covers. See 4.12 CYLINDER HEAD COVERS.
7. Install clutch. See 5.7 CLUTCH.
8. Install starter. See 8.5 STARTER.
9. Install engine. See 4.9 REPLACE ENGINE.

PREPARE

1. Remove engine. See 4.9 REPLACE ENGINE.
2. Remove starter. See 8.5 STARTER.
3. Remove clutch. See 5.7 CLUTCH.
4. Remove cylinder head covers. See 4.12 CYLINDER HEAD COVERS.
5. Remove cylinder heads. See 4.14 CYLINDER HEADS.
6. Remove cylinders. See 4.19 CYLINDERS.
7. Remove balancer shaft. See 4.23 BALANCER.
8. Remove output pulley. See 5.5 OUTPUT PULLEY.
9. Separate crankcase. See 4.28 CRANKCASE ASSEMBLY.

REMOVE

PART NUMBER	TOOL NAME
HD-51503	CRANKSHAFT GUIDES

1. See Figure 4-54. Remove crankshaft assembly from right crankcase half.
   a. Install CRANKSHAFT GUIDES (Part No. HD-51503).
   b. Remove crankshaft assembly.

INSTALL

PART NUMBER	TOOL NAME
HD-51503	CRANKSHAFT GUIDES

1. See Figure 4-54. Install crankshaft assembly into right crankcase half.
   a. Install CRANKSHAFT GUIDES (Part No. HD-51503).
   b. Install crankshaft assembly.

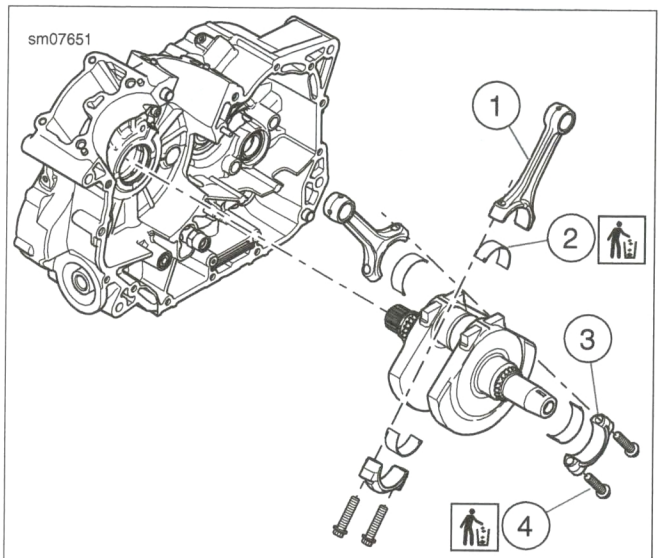

1. **Connecting rod (2)**
2. **Bearing (4)**
3. **End cap (2)**
4. **Screw (4)**

Figure 4-54. Crankshaft and Connecting Rods

DISASSEMBLE

PART NUMBER	TOOL NAME
HD-44358	FLYWHEEL SUPPORT FIXTURE

1. Secure crankshaft on FLYWHEEL SUPPORT FIXTURE (Part No. HD-44358).
   a. Place fixture in a vise.
   b. Secure crankshaft to fixture.

NOTES

- *Mark direction of connecting rod and end cap assemblies before removal.*
- *Each connecting rod and end cap is a machined set. Do not interchange parts.*

2. See Figure 4-54. Remove connecting rods.
   a. Discard screws (4).
   b. Discard bearings (2).

CLEAN AND INSPECT

⚠WARNING

Compressed air can pierce the skin and flying debris from compressed air could cause serious eye injury. Wear safety glasses when working with compressed air. Never use your hand to check for air leaks or to determine air flow rates. (00061a)

1. Wash all parts with a non-flammable cleaning solvent. Dry with low-pressure compressed air.

2. Inspect the following areas for excessive wear and discoloration. Replace as necessary.
   a. Connecting rod journal
   b. Bearing surfaces
   c. Connecting rods
3. Clean oil passages.

ASSEMBLE

FASTENER	TORQUE VALUE	
Connecting rod screws (first torque)	19-23 Nm	14-16 ft-lbs
Connecting rod screws (second torque)	85-95 degrees	85-95 degrees

1. See Figure 4-55 and Figure 4-56. Select proper bearings. Refer to Table 4-27.
2. See Figure 4-54. Install **new** bearings (2).
   a. See Figure 4-57. Align notches in bearings with notches in connecting rods.

NOTES

- *A new connecting rod and end cap assembly is installed in either direction.*
- *The existing connecting rod and end cap assembly is installed in the same direction it was removed from.*

3. Install connecting rods.
   a. Lubricate threads of **new** screws (4) with engine oil.
   b. See Figure 4-58. Align dots.
   c. Install **new** screws. Tighten to 19-23 Nm (14-16 ft-lbs).
   d. Turn fasteners an additional 85-95 degrees (85-95 degrees).

Table 4-27. Connecting Rod Bearing Selection

CRANKSHAFT ID	CONNECTING ROD ID	
	A	B
B	Blue	Black
A	Black	Red

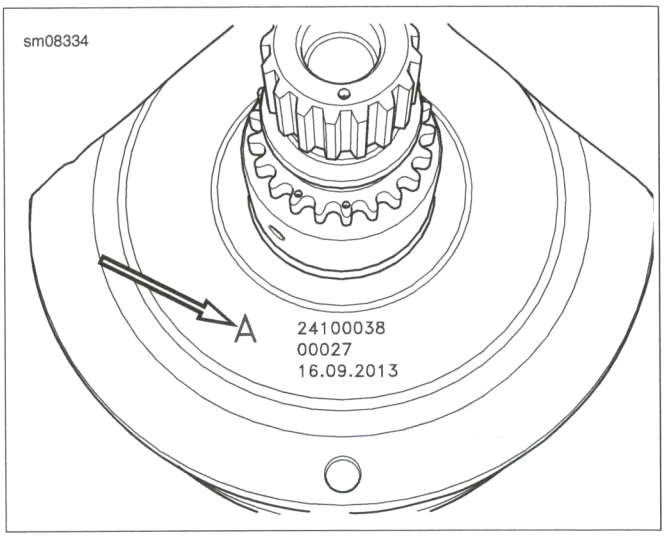

Figure 4-55. Crankshaft ID

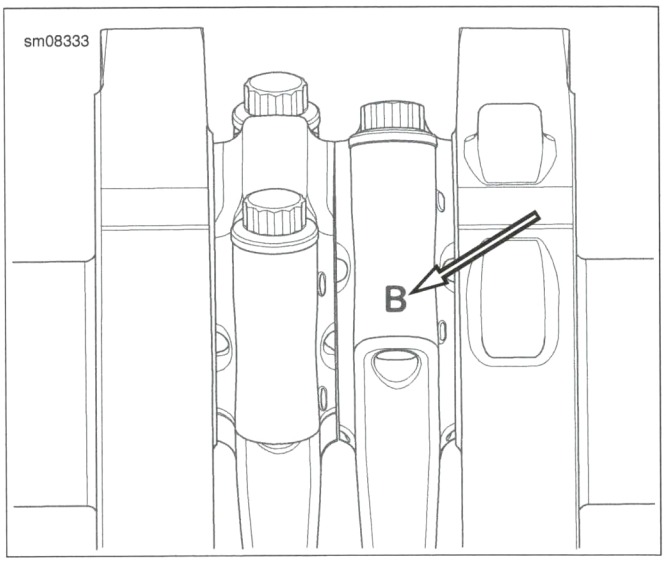

Figure 4-56. Connecting Rod ID

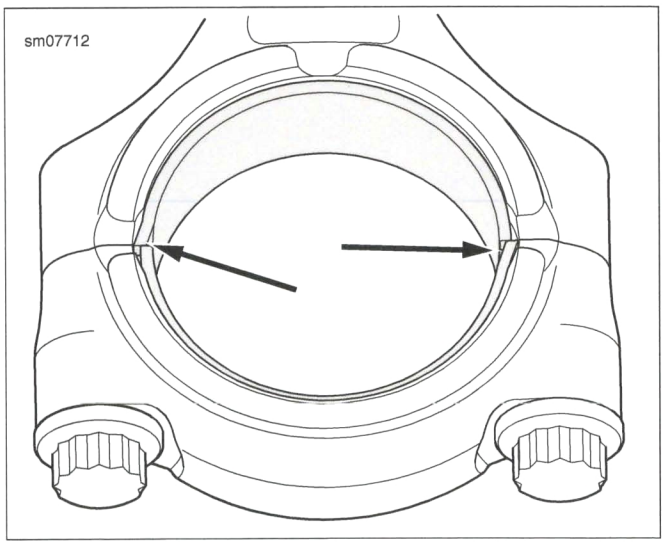

Figure 4-57. Connecting Rod Bearings

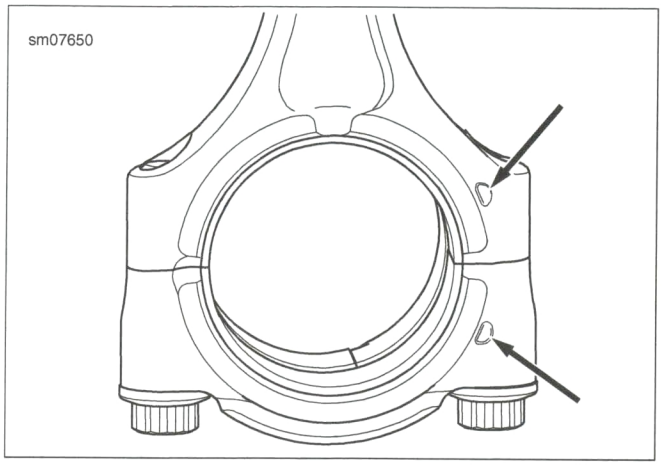

Figure 4-58. Connecting Rod Dots

COMPLETE

1. Join crankcase halves. See 4.28 CRANKCASE ASSEMBLY.
2. Install output pulley. See 5.5 OUTPUT PULLEY.
3. Install balancer shaft. See 4.23 BALANCER.
4. Install cylinders. See 4.19 CYLINDERS.
5. Install cylinder heads. See 4.14 CYLINDER HEADS.
6. Install cylinder head covers. See 4.12 CYLINDER HEAD COVERS.
7. Install clutch. See 5.7 CLUTCH.
8. Install starter. See 8.5 STARTER.
9. Install engine. See 4.9 REPLACE ENGINE.

SUBJECT	PAGE NO.
5.1 FASTENER TORQUE VALUES	5-1
5.2 SPECIFICATIONS: DRIVE	5-2
5.3 TRANSMISSION OPERATION	5-3
5.4 DRIVE BELT	5-5
5.5 OUTPUT PULLEY	5-6
5.6 SHIFTER SHAFT	5-7
5.7 CLUTCH	5-9
5.8 DRUM AND FORKS	5-13
5.9 TRANSMISSION	5-15
5.10 TRANSMISSION RIGHT CRANKCASE BEARINGS	5-18
5.11 TRANSMISSION LEFT CRANKCASE BEARINGS	5-19

NOTES

FASTENER TORQUE VALUES IN THIS CHAPTER

The table below lists torque values for all fasteners presented in this chapter.

FASTENER	TORQUE VALUE		NOTES
Clutch assembly nut	160.0-170.0 Nm	118-125 ft-lbs	5.7 CLUTCH, Install
Clutch lifter plate screws	8.0-10.0 Nm	71-88 **in-lbs**	5.7 CLUTCH, Install
Detent arm screw	10.0-12.0 Nm	89-106 **in-lbs**	5.6 SHIFTER SHAFT, Install
Detent collar screw	5.0-7.0 Nm	45-61 **in-lbs**	5.6 SHIFTER SHAFT, Install
Input shaft bearing retainer plate screws	10.0-12.0 Nm	89-106 **in-lbs**	5.10 TRANSMISSION RIGHT CRANKCASE BEARINGS, Install
Output pulley nut	68.0-84.0 Nm	51-62 ft-lbs	5.5 OUTPUT PULLEY, Install
Shift drum contact assembly screw	5.0-7.0 Nm	45-62 **in-lbs**	5.8 DRUM AND FORKS, Assemble
Shifter shaft lever screw	9.0-11.0 Nm	80-97 **in-lbs**	5.6 SHIFTER SHAFT, Install

TRANSMISSION AND CLUTCH

Table 5-1. Clutch

ITEM	XG500	XG750
Type	Wet-multiple disc	

Table 5-2. Clutch Springs

ITEM	XG500	XG750
Clutch spring free length	46.2 mm (1.81 in)	46.2 mm (1.81 in)

Table 5-3. Transmission

ITEM	XG500	XG750
Type	6-speed forward constant mesh	
Lubricant	HD360 20W50 Oil (Shared with engine.)	

Table 5-4. Sprocket Teeth

ITEM		XG500	XG750
Primary Drive	Engine Sprocket	36 teeth	36 teeth
	Clutch Sprocket	68 teeth	68 teeth
Final Drive	Output pulley	30 teeth	30 teeth
	Rear wheel sprocket	80 teeth	80 teeth

Table 5-5. Drive Ratios

GEAR	RATIO
First gear	2.83
Second gear	2.00
Third gear	1.48
Fourth gear	1.19
Fifth gear	1.00
Sixth gear	0.90

NOTE

Final gear ratios indicate the number of mainshaft revolutions required to drive the output sprocket one revolution.

SERVICE WEAR LIMITS

Table 5-6. Clutch Plates

ITEM		Service Wear Limit	
		XG500	XG750
Clutch Plate Thickness	Friction plate (fiber)	0.25 mm (0.010 in)	
	Steel plate	0.15 mm (0.006 in)	

POWER FLOW

See Figure 5-1. The 6-speed transmission consists of two parallel shafts supporting six gears each. The input shaft, which supports the clutch. The output shaft which supports the transmission sprocket.

Each gear on the input shaft is in constant mesh with a corresponding gear on the output shaft. Each of these six pairs of gears makes up a different speed in the transmission.

The transmission gears are divided into two types, gears that rotate with the shaft, and gears that spin freely on the shaft. A gear that rotates with the shaft always meshes with a freewheeling gear.

Three forks are used to shift gears. A drum-shaped shifter, next to the input and output shafts, controls the position of the shifter forks.

Neutral

Power is introduced to the transmission through the clutch. In neutral with the clutch engaged, the input shaft first, second, third and fourth gears are rotating. No power is transferred to the output shaft since output shaft first, second, third and fourth gears are freewheeling gears.

First Gear

When the transmission is shifted into first gear (1), the first/fourth shift fork engages first gear to the output shaft.

Second Gear

When the transmission is shifted into second gear (2), the second/third shift fork engages second gear to the output shaft.

Third Gear

When the transmission is shifted into third gear (3), the second/third shift fork engages third gear to the output shaft.

Fourth Gear

When the transmission is shifted into fourth gear (4), the first/fourth shift fork engages fourth gear to the output shaft.

Fifth Gear

When the transmission is shifted into fifth gear (5), the fifth/sixth shift fork engages fifth gear to the output shaft.

Sixth Gear

When the transmission is shifted into sixth gear (6), the fifth/sixth shift fork engages sixth gear to the output shaft.

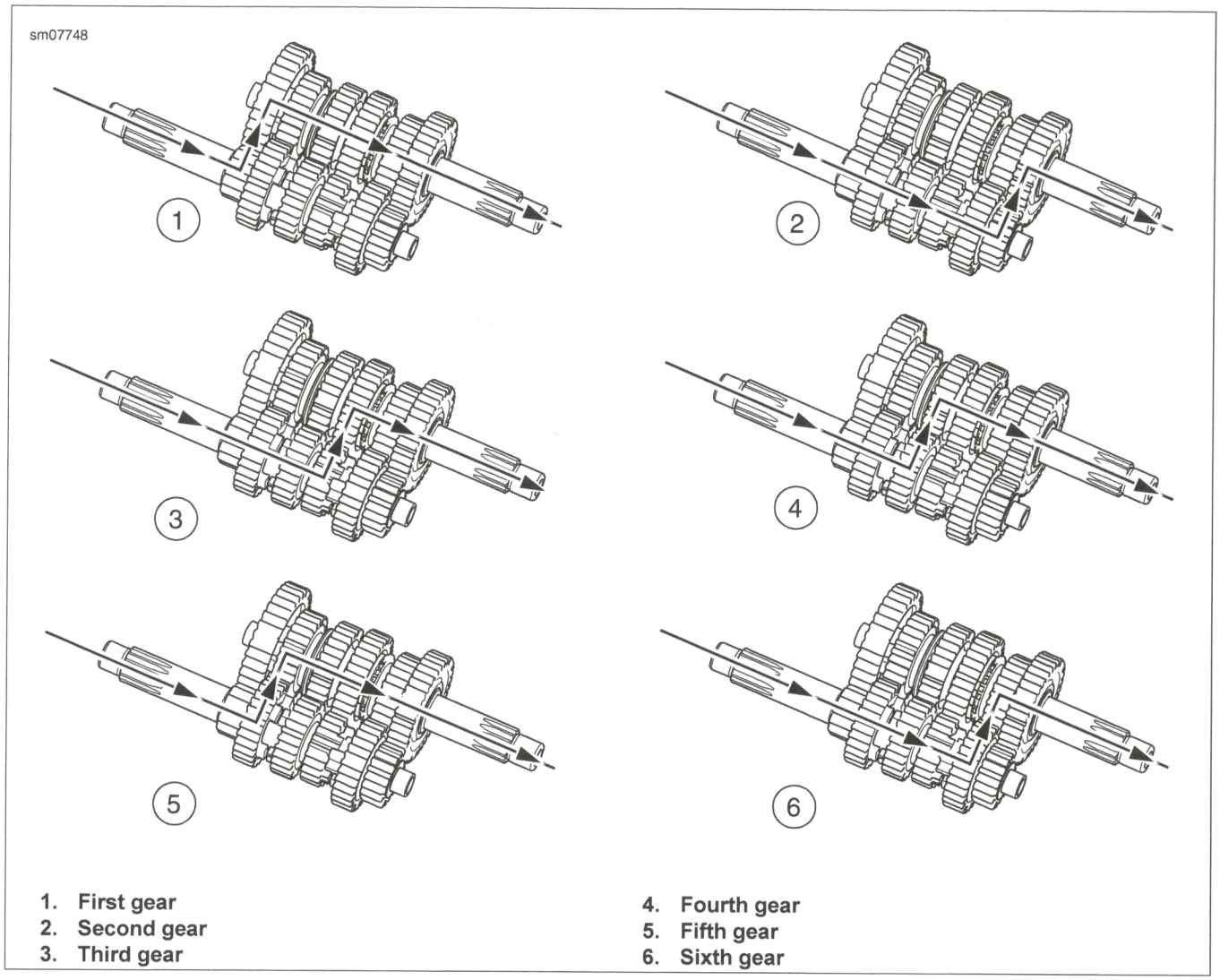

1. First gear
2. Second gear
3. Third gear
4. Fourth gear
5. Fifth gear
6. Sixth gear

Figure 5-1. Transmission Power Flow

PREPARE

1. Remove front belt guard. See 3.21 BELT GUARDS.
2. Disconnect negative battery cable. See 8.4 POWER DISCONNECT.
3. Remove muffler. See 6.17 MUFFLER.
4. Remove muffler bracket. See 6.18 EXHAUST SYSTEM.
5. Remove rear wheel. See 3.5 REAR WHEEL.
6. Detach left shock absorber from rear fork. See 3.22 SHOCK ABSORBERS.
7. Remove rear fork pivot shaft nut, washer and spacer. See 3.20 REAR FORK.

REMOVE

1. See Figure 5-2. Remove drive belt (1) from output pulley (2).

INSTALL

1. See Figure 5-2. Install drive belt (1) on output pulley (2).

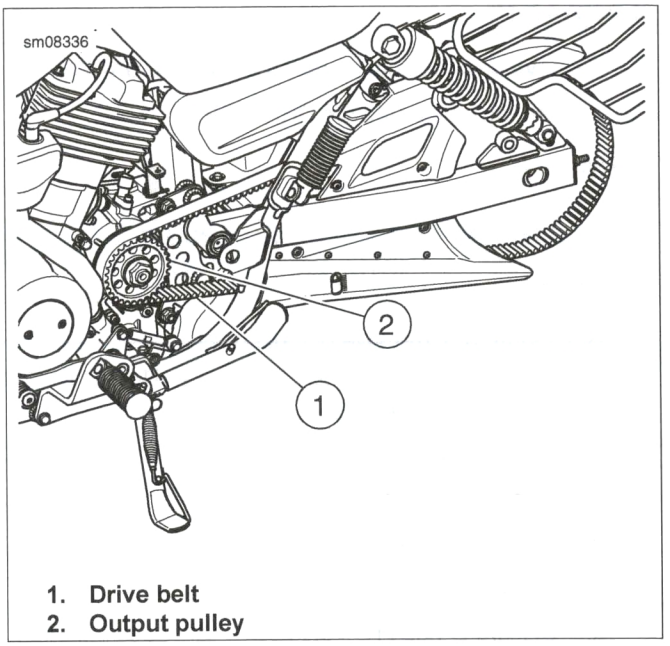

1. **Drive belt**
2. **Output pulley**

Figure 5-2. Drive Belt

COMPLETE

1. Install rear fork pivot shaft spacer, washer and nut. See 3.20 REAR FORK.
2. Install muffler bracket. See 6.18 EXHAUST SYSTEM.
3. Install muffler. See 6.17 MUFFLER.
4. Attach left shock absorber to rear fork. See 3.22 SHOCK ABSORBERS.
5. Install rear wheel. See 3.5 REAR WHEEL.
6. Adjust drive belt deflection. See 2.19 INSPECT AND ADJUST DRIVE BELT AND SPROCKETS.
7. Connect negative battery cable. See 8.4 POWER DISCONNECT.
8. Install front belt guard. See 3.21 BELT GUARDS.

PREPARE

1. Remove drive belt cover. See 3.21 BELT GUARDS.
2. Loosen drive belt. See 5.4 DRIVE BELT.

REMOVE

PART NUMBER	TOOL NAME
HD-51509	OUTPUT PULLEY TOOL

1. See Figure 5-3. Remove output pulley.
   a. Install OUTPUT PULLEY TOOL (Part No. HD-51509) over output pulley (4).
   b. Remove nut (6).
   c. Remove cup washer (5).
   d. Remove output pulley.
2. Remove collar (2).
   a. Discard O-ring (1).
3. Discard seal (3).

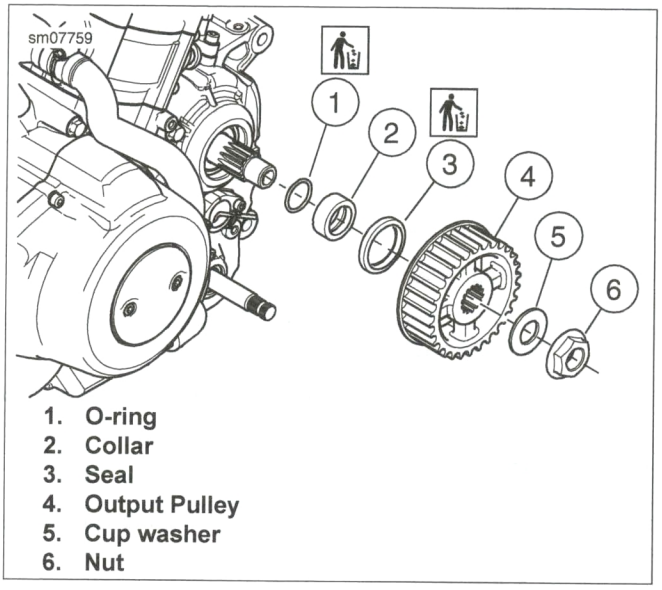

1. **O-ring**
2. **Collar**
3. **Seal**
4. **Output Pulley**
5. **Cup washer**
6. **Nut**

Figure 5-3. Oupput Pulley

INSTALL

PART NUMBER	TOOL NAME
HD-51509	OUTPUT PULLEY TOOL

FASTENER	TORQUE VALUE	
Output pulley nut	68.0-84.0 Nm	51-62 ft-lbs

NOTE

See Figure 5-4. Install V-groove side of seal toward transmission.

1. See Figure 5-3. Install **new** seal (3).
2. Install collar.
   a. Install **new** O-ring (1).
   b. Install collar (2).
3. Install output pulley.
   a. Install output pulley (4).
   b. Install cup washer (5).
   c. Install OUTPUT PULLEY TOOL (Part No. HD-51509) over output pulley.
   d. Install nut (6). Tighten to 68.0-84.0 Nm (51-62 ft-lbs).

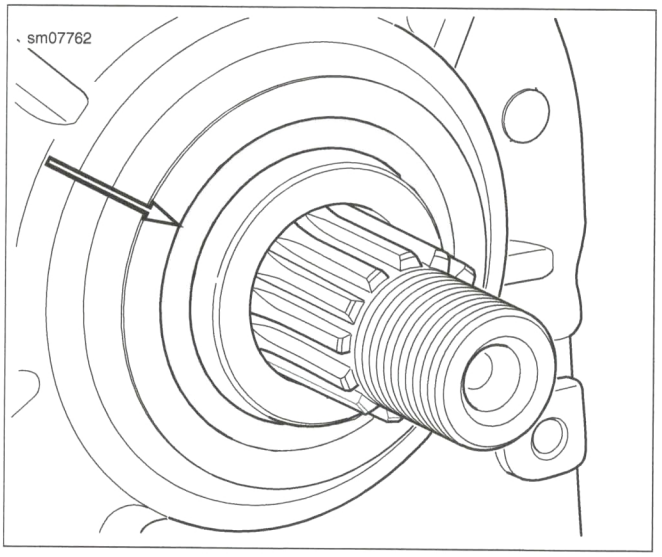

Figure 5-4. Output Shaft Seal

COMPLETE

1. Tighten drive belt.
2. Install drive belt. See 5.4 DRIVE BELT.

PREPARE

1. Disconnect negative battery cable. 8.4 POWER DISCONNECT.
2. Remove right side rider foot controls. 3.34 RIDER FOOT CONTROLS.
3. Remove clutch cover. 4.22 CLUTCH COVER.
4. Remove clutch. 5.7 CLUTCH.
5. Detach shift lever rod assembly from shifter shaft lever. See 3.34 RIDER FOOT CONTROLS.

REMOVE

Shifter Shaft Assembly

1. See Figure 5-5. Remove screw (1).
2. See Figure 5-6. Remove shifter shaft assembly.
   a. Press down and hold ratchet arm assembly (1).
   b. Remove shifter shaft assembly (3).
   c. See Figure 5-5. Remove shifter shaft lever (2).

Detent Assembly

1. See Figure 5-7. Remove detent arm assembly.
   a. Remove screw (4) and washer.
   b. Remove detent arm assembly (3).
2. Remove detent collar assembly.
   a. Remove screw (1).
   b. Remove detent collar assembly (2).

Shifter Shaft Seal

1. See Figure 5-8. Remove shifter shaft seal.

INSTALL

PART NUMBER	TOOL NAME
HD-51440	SHIFTER SHAFT SEAL INSTALLER

FASTENER	TORQUE VALUE	
Detent collar screw	5.0-7.0 Nm	45-61 **in-lbs**
Detent arm screw	10.0-12.0 Nm	89-106 **in-lbs**
Shifter shaft lever screw	9.0-11.0 Nm	80-97 **in-lbs**

Shifter Shaft Seal

NOTE

Install V-groove side of seal toward engine.

1. See Figure 5-8. Install shifter shaft seal with SHIFTER SHAFT SEAL INSTALLER (Part No. HD-51440).

Detent Assembly

1. See Figure 5-9. Verify that index pin is installed.
2. See Figure 5-7. Install detent collar assembly.
   a. Install detent collar assembly (2).
   b. Install screw (1). Tighten to 5.0-7.0 Nm (45-61 **in-lbs**).
3. Install detent arm assembly.
   a. Install detent arm assembly (3).
   b. Install washer and screw (4). Tighten to 10.0-12.0 Nm (89-106 **in-lbs**).

Shifter Shaft Assembly

1. See Figure 5-6. Install shifter shaft assembly.
   a. Press down and hold rachet arm assembly (1).
   b. Install shifter shaft assembly (3). Verify centering spring straddles centering stud (2).
   c. See Figure 5-5. Install shifter shaft lever (2).
2. See Figure 5-5. Install screw (1). Tighten to 9.0-11.0 Nm (80-97 **in-lbs**).

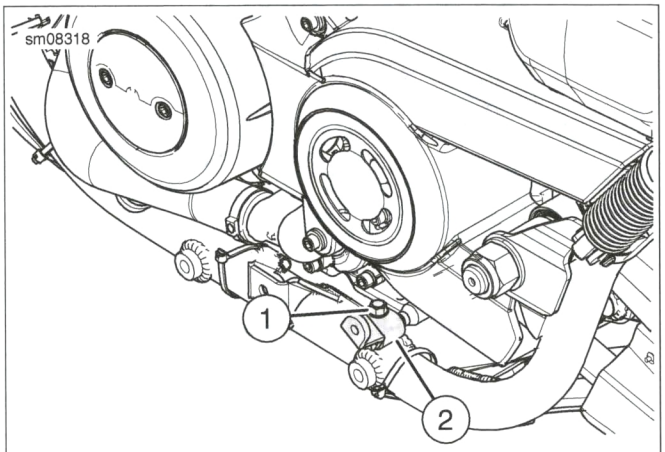

1. **Screw**
2. **Shifter shaft lever**

Figure 5-5. Shifter Shaft Lever

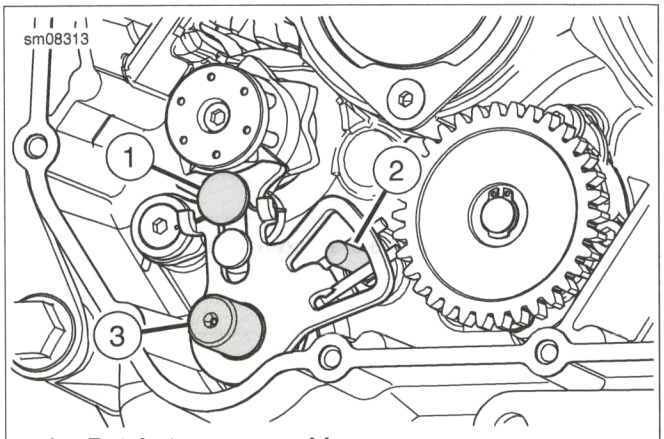

1. **Ratchet arm assembly**
2. **Centering stud**
3. **Shifter shaft assembly**

Figure 5-6. Shifter Shaft Assembly

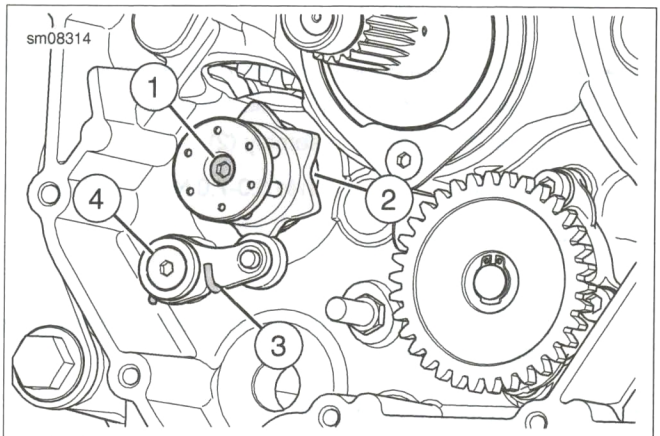

1. **Screw**
2. **Detent collar assembly**
3. **Detent arm assembly**
4. **Screw and washer**

Figure 5-7. Detent Assembly

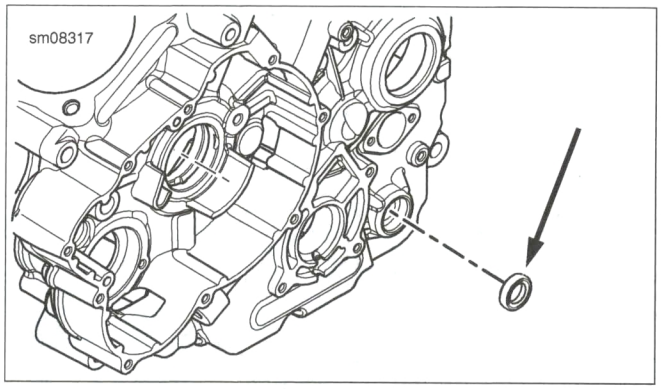

Figure 5-8. Shifter Shaft Seal

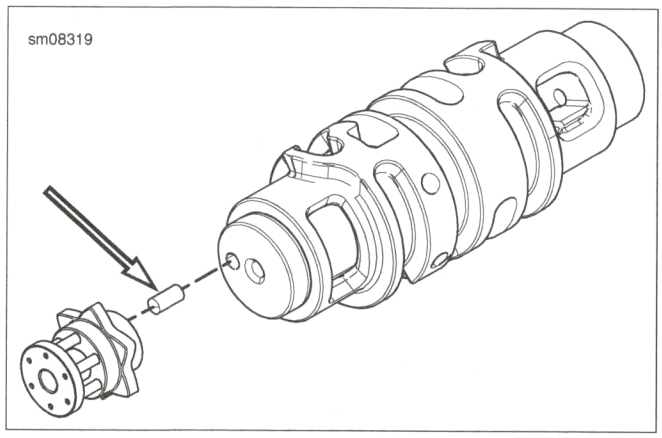

Figure 5-9. Index Pin

DISASSEMBLE

1. See Figure 5-10. Disassemble shifter shaft.
   a. Remove washer (4).
   b. Discard retainer clip (3).
   c. Remove centering spring (2).

ASSEMBLE

1. See Figure 5-10. Assemble shifter shaft.
   a. Install centering spring (2).
   b. Install **new** retainer clip (3).
   c. Install washer (4).

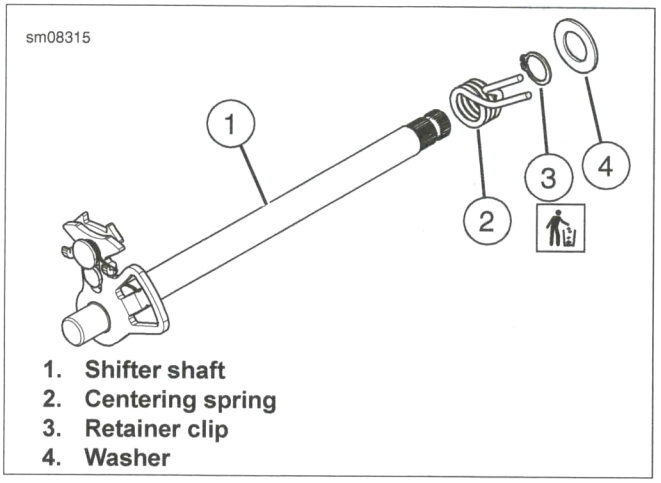

1. **Shifter shaft**
2. **Centering spring**
3. **Retainer clip**
4. **Washer**

Figure 5-10. Shifter Shaft Centering Spring

COMPLETE

1. Attach shift lever rod assembly to shifter shaft lever. See 3.34 RIDER FOOT CONTROLS.
2. Verify shifter shaft and detent assembly shift properly.
3. Install clutch. See 5.7 CLUTCH.
4. Install clutch cover. See 4.22 CLUTCH COVER.
5. Install right side rider foot controls. See 3.34 RIDER FOOT CONTROLS.
6. Connect negative battery cable. See 8.4 POWER DISCONNECT.

PREPARE

1. Disconnect negative battery cable. See 8.4 POWER DISCONNECT.
2. Drain engine oil. See 2.5 REPLACE ENGINE OIL AND FILTER.
3. Remove exhaust. See 6.18 EXHAUST SYSTEM.
4. Remove right footrest and rear brake pedal assembly. See 3.34 RIDER FOOT CONTROLS.
5. Remove clutch cover. See 4.22 CLUTCH COVER.

REMOVE

PART NUMBER	TOOL NAME
HD-51281	CRANKSHAFT LOCKING TOOL
HD-51505	CLUTCH LOCKING TOOL

1. See Figure 5-11. Remove lifter plate.
   a. Remove screws (1).
   b. Remove lifter plate (2).
2. Install CRANKSHAFT LOCKING TOOL (Part No. HD-51281).
3. Install CLUTCH LOCKING TOOL (Part No. HD-51505).
4. Remove clutch.
   a. Remove nut (3).
   b. Remove cup washer (4).
   c. Remove clutch (5).
5. Remove thrust washer (6).

INSTALL

PART NUMBER	TOOL NAME
HD-51281	CRANKSHAFT LOCKING TOOL
HD-51505	CLUTCH LOCKING TOOL

FASTENER	TORQUE VALUE	
Clutch assembly nut	160.0-170.0 Nm	118-125 ft-lbs
Clutch lifter plate screws	8.0-10.0 Nm	71-88 **in-lbs**

1. See Figure 5-11. Install thrust washer (6) with beveled side toward engine.
2. Install CRANKSHAFT LOCKING TOOL (Part No. HD-51281).
3. Install CLUTCH LOCKING TOOL (Part No. HD-51505).
4. Install clutch (5).
   a. Install clutch (5).
   b. Install cup washer (4) with concave side facing clutch.
   c. Install nut (3). Tighten to 160.0-170.0 Nm (118-125 ft-lbs).
5. Install lifter plate (2).
   a. Install lifter plate (2).
   b. Install screws (1). Tighten to 8.0-10.0 Nm (71-88 **in-lbs**).
6. Remove CRANKSHAFT LOCKING TOOL (Part No. HD-51281).

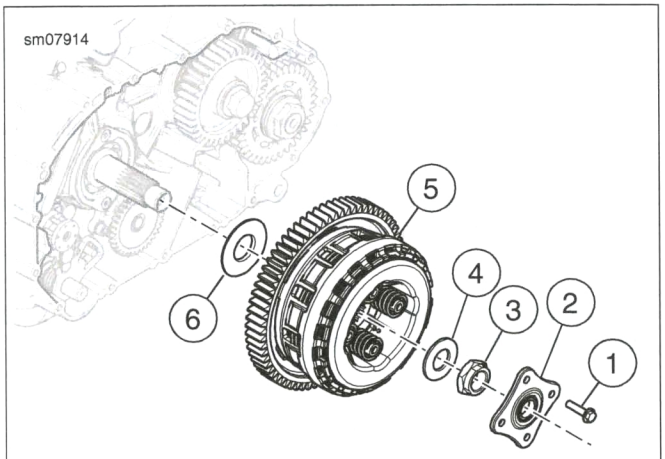

1. **Screw (4)**
2. **Lifter plate**
3. **Nut**
4. **Cup washer**
5. **Clutch**
6. **Thrust washer**

Figure 5-11. Clutch Assembly

DISASSEMBLE

1. See Figure 5-12. Remove pressure plate and hub assembly.
   a. Remove clutch hub (13).
   b. Remove damper spring (11) and damper spring seat (12).
   c. Remove narrow friction plate (10).
   d. Remove steel plates (8) and friction plates (9).
   e. Remove inner friction plate (7).
   f. Remove pressure plate (6).
2. Remove washer (5).
3. Remove collar (4).
4. Remove oil pump gear (1).
5. Remove bearing (2).

CLEAN AND INSPECT

⚠WARNING

Compressed air can pierce the skin and flying debris from compressed air could cause serious eye injury. Wear safety glasses when working with compressed air. Never use your hand to check for air leaks or to determine air flow rates. (00061a)

1. Wash parts, except friction plates and bearing, in cleaning solvent. Dry parts with low-pressure, compressed air.

NOTE

If any individual plate shows evidence of wear or damage, replace all friction plates.

2. Check friction plates:
   a. Use low-pressure, compressed air to remove all lubricant. Do not dry with cloth.
   b. Look for worn or damaged fiber surface material on both sides.
   c. Measure thickness of each plate with a dial caliper or micrometer.
   d. Discard all friction plates if any one plate is less than 3.62 mm (0.142 in) thick.

NOTE

Discard any steel plate that is grooved or bluish in color. Blue plates are likely warped or distorted.

3. Check steel plates:
   a. Lay each plate on a precision flat surface.
   b. Insert feeler gauge between plate and flat surface in several places.
   c. Replace any steel plate that is warped more than 0.15 mm (0.006 in).
4. Check clutch hub:
   a. Check for excessive wear. Replace hub if worn or damaged.
5. Check bearings:
   a. Check bearings for smoothness. Replace bearing if it rotates roughly, binds or has any end play.
   b. Check ramps for excessive wear. Replace hub if ramps are worn or damaged.

ASSEMBLE

NOTE

*If installing **new** friction plates, soak them for 10 minutes in GENUINE HARLEY-DAVIDSON H-D 360 20W50 MOTORCYCLE OIL and assemble while wet.*

1. See Figure 5-12. Install bearing (2), if removed, using a suitable press.
2. Install oil pump gear (1).
3. Install collar (4).
4. Install washer (5).
5. Assemble pressure plate and hub assembly.
   a. See Figure 5-13. Install damper spring seat (3) and damper spring (12) on clutch hub (13).

NOTES

Figure 5-14. The inner friction plate (1) has more oil grooves cut into the friction material than the other friction discs (2).

The narrow friction plate (3) is thinner than the other friction plates to accommodate the damper spring and seat.

   b. See Figure 5-12. Install narrow friction plate (10).
   c. Install steel plates (8) and friction plates (9).
   d. Install inner friction plate (7).
   e. Install pressure plate (6).
6. See Figure 5-15. Install pressure plate and hub assembly into clutch basket. Align friction plate tabs as shown.
   a. Align tabs of inner friction plate and friction plates (1) as shown.
   b. Align tabs of narrow friction plate (2) as shown.

sm08169

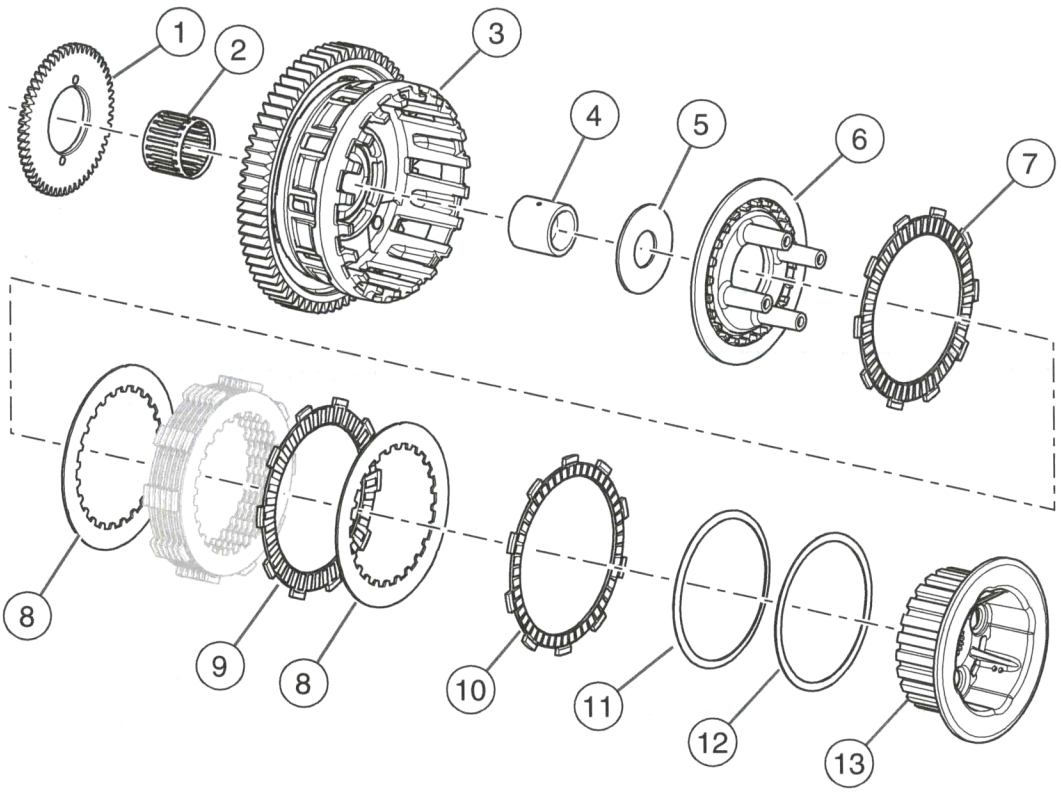

1. Oil pump gear
2. Bearing
3. Clutch basket
4. Collar
5. Washer
6. Pressure plate
7. Inner friction plate
8. Steel plate (7)
9. Friction plate (6)
10. Narrow friction plate
11. Damper spring
12. Damper seat
13. Clutch hub

Figure 5-12. Clutch Assembly

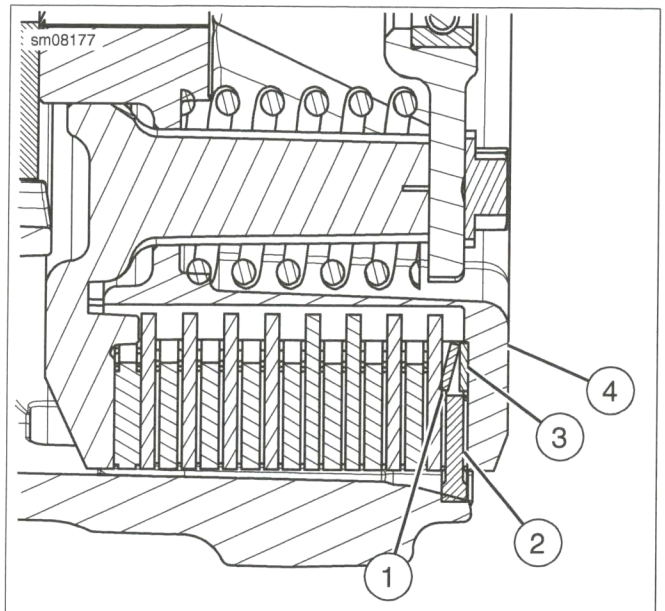

1. Damper spring
2. Narrow friction plate
3. Damper spring seat
4. Clutch hub

Figure 5-13. Damper Spring and Seat

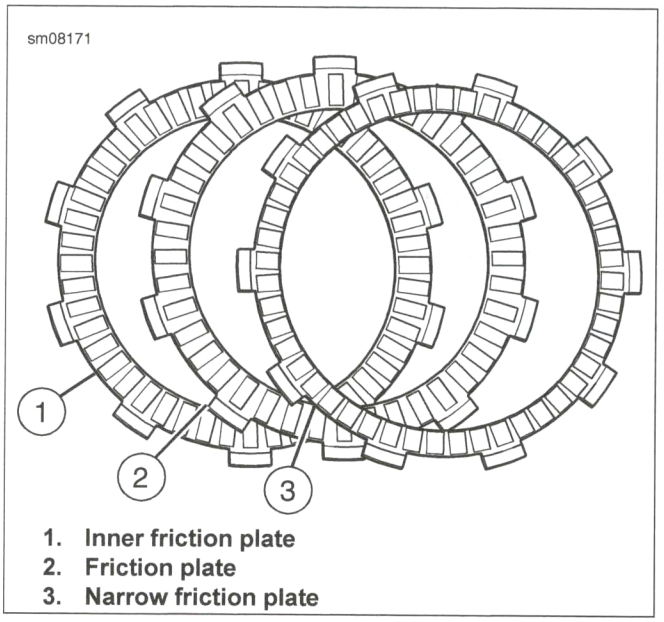

1. Inner friction plate
2. Friction plate
3. Narrow friction plate

Figure 5-14. Friction Plates

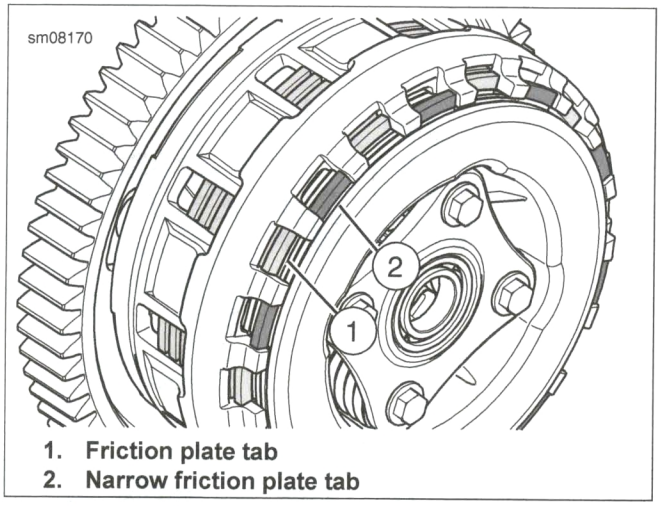

1. Friction plate tab
2. Narrow friction plate tab

Figure 5-15. Friction Plate Tab Locations

COMPLETE

1. Fill with engine oil. See 2.5 REPLACE ENGINE OIL AND FILTER.
2. Install right footrest and rear brake pedal assembly. See 3.34 RIDER FOOT CONTROLS.
3. Install exhaust. See 6.18 EXHAUST SYSTEM.
4. Install clutch cover. See 4.22 CLUTCH COVER.
5. Connect negative battery cable. See 8.4 POWER DISCONNECT.

PREPARE

1. Remove engine. See 4.9 REPLACE ENGINE.
2. Remove starter. See 8.5 STARTER.
3. Remove clutch. See 5.7 CLUTCH.
4. Remove cylinder head covers. See 4.12 CYLINDER HEAD COVERS.
5. Remove cylinder heads. See 4.14 CYLINDER HEADS.
6. Remove cylinders. See 4.19 CYLINDERS.
7. Remove balancer shaft. See 4.23 BALANCER.
8. Remove output pulley. See 5.5 OUTPUT PULLEY
9. Separate crankcase. See 4.28 CRANKCASE ASSEMBLY.

REMOVE

1. See Figure 5-16. Remove shafts (4).
2. Remove shift drum (3).
3. Remove forks (1, 2, 5).

INSTALL

1. See Figure 5-16. Install forks (1, 2, 5).
   a. See Figure 5-17. Identify forks using mark (1). Refer to Table 5-7.
   b. Slider (2) for each fork faces shift drum once installed.
2. See Figure 5-16. Install shift drum.
3. Install shafts (4).

Table 5-7. Fork Identification

DESCRIPTION	MARKING
First/fourth fork	R
Second/third fork	L
Fifth/sixth fork	C

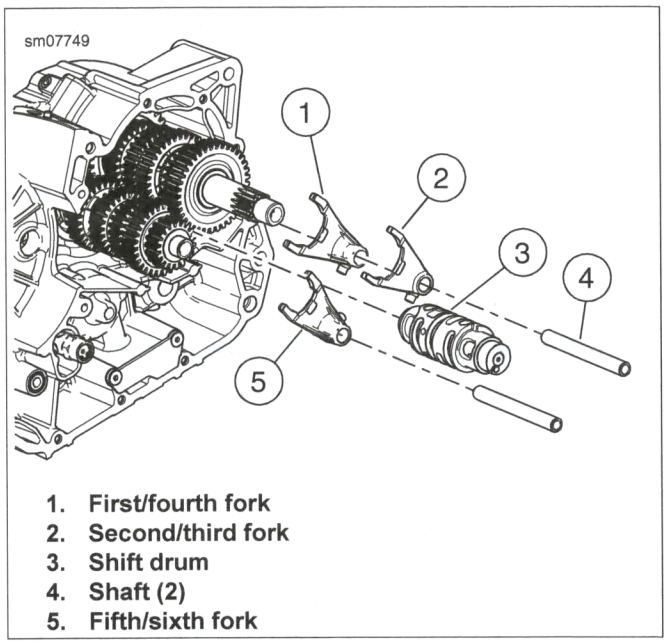

1. **First/fourth fork**
2. **Second/third fork**
3. **Shift drum**
4. **Shaft (2)**
5. **Fifth/sixth fork**

Figure 5-16. Shift Drum and Forks

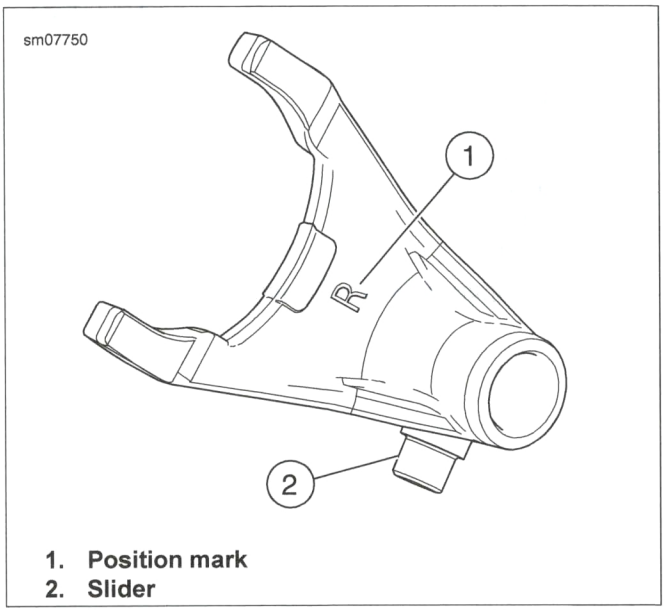

1. **Position mark**
2. **Slider**

Figure 5-17. Shift Fork

DISASSEMBLE

1. See Figure 5-18. Remove index pin (1).
2. Remove neutral switch contact assembly.
   a. Remove screw (6).
   b. Remove contact plate (5), contact pin (4) and spring (3).

ASSEMBLE

FASTENER	TORQUE VALUE	
Shift drum contact assembly screw	5.0-7.0 Nm	45-62 **in-lbs**

1. See Figure 5-18. Install index pin (1).

NOTE

See Figure 5-19 for assembled view of neutral switch contact assembly.

2. See Figure 5-18. Install neutral switch contact assembly.
   a. Install spring (3).
   b. Install contact pin (4) and contact plate (5).
   c. Install screw (6). Tighten to 5.0-7.0 Nm (45-62 **in-lbs**).

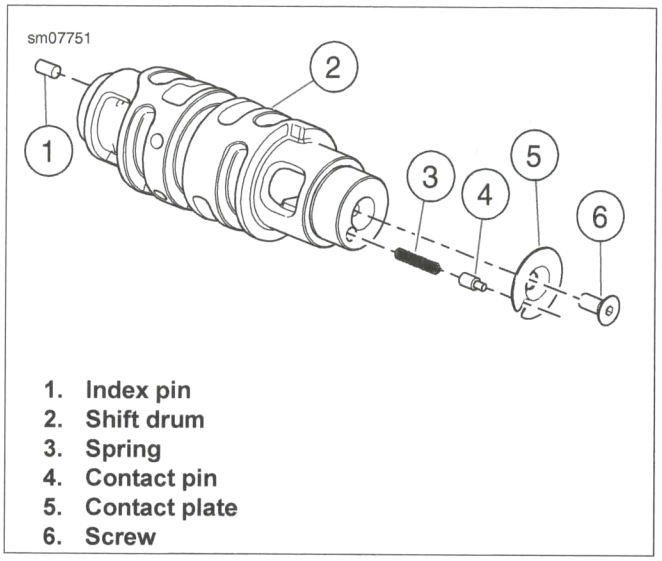

1. **Index pin**
2. **Shift drum**
3. **Spring**
4. **Contact pin**
5. **Contact plate**
6. **Screw**

Figure 5-18. Shift Drum Assembly

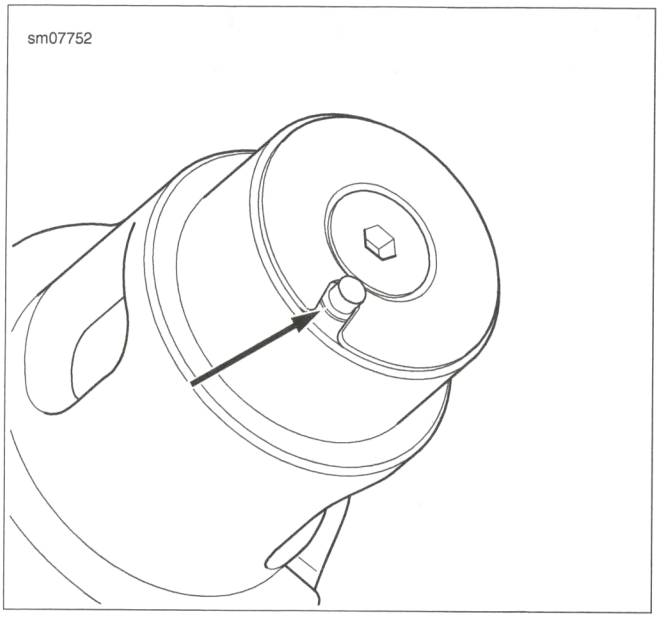

Figure 5-19. Neutral Switch Contact Assembly

COMPLETE

1. Join crankcase halves. See 4.28 CRANKCASE ASSEMBLY.
2. Install output pulley. See 5.5 OUTPUT PULLEY
3. Install balancer shaft. See 4.23 BALANCER.
4. Install cylinders. See 4.19 CYLINDERS.
5. Install cylinder heads. See 4.14 CYLINDER HEADS.
6. Install cylinder head covers. See 4.12 CYLINDER HEAD COVERS.
7. Install clutch. See 5.7 CLUTCH.
8. Install starter. See 8.5 STARTER.
9. Install engine. See 4.9 REPLACE ENGINE.

PREPARE

1. Remove engine. See 4.9 REPLACE ENGINE.
2. Remove starter. See 8.5 STARTER.
3. Remove clutch. See 5.7 CLUTCH.
4. Remove cylinder head covers. See 4.12 CYLINDER HEAD COVERS.
5. Remove cylinder heads. See 4.14 CYLINDER HEADS.
6. Remove cylinders. See 4.19 CYLINDERS.
7. Remove balancer shaft. See 4.23 BALANCER.
8. Remove output pulley. See 5.5 OUTPUT PULLEY
9. Separate crankcase. See 4.28 CRANKCASE ASSEMBLY.
10. Remove neutral switch. See 8.16 NEUTRAL INDICATOR SWITCH.
11. Remove drum and forks. See 5.8 DRUM AND FORKS.

REMOVE

NOTE

Input and output shaft assemblies separate once removed.

1. See Figure 5-20. Remove transmission assembly.

INSTALL

1. See Figure 5-20. Install transmission.
   a. Mesh gears of input and output shaft assemblies.
   b. Install transmission as an assembly into right crankcase half.

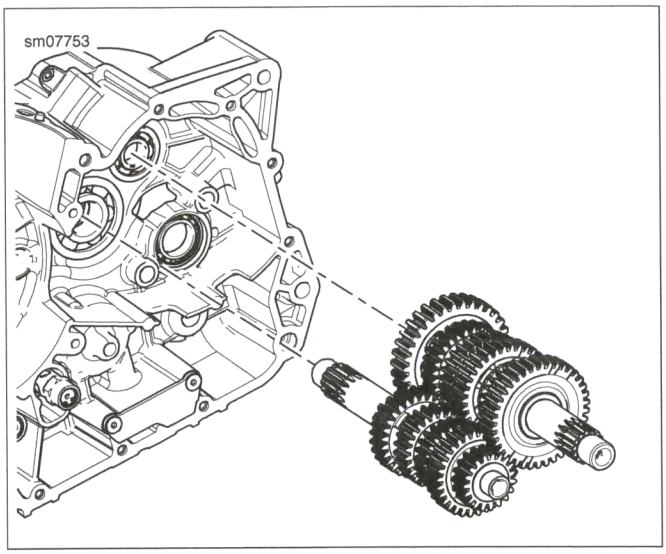

Figure 5-20. Transmission Assembly

DISASSEMBLE

Input Shaft

1. See Figure 5-21. Remove gears (2-6) from input shaft.

Output Shaft

1. See Figure 5-22. Remove gears (1-8) from output shaft.

ASSEMBLE

Input Shaft

1. See Figure 5-21. Install gears (2-6) on input shaft.

Output Shaft

1. See Figure 5-22. Install gears (1-8) on output shaft.
   a. First gear (8) has one side that is machined. Place machined side toward fifth gear (6).

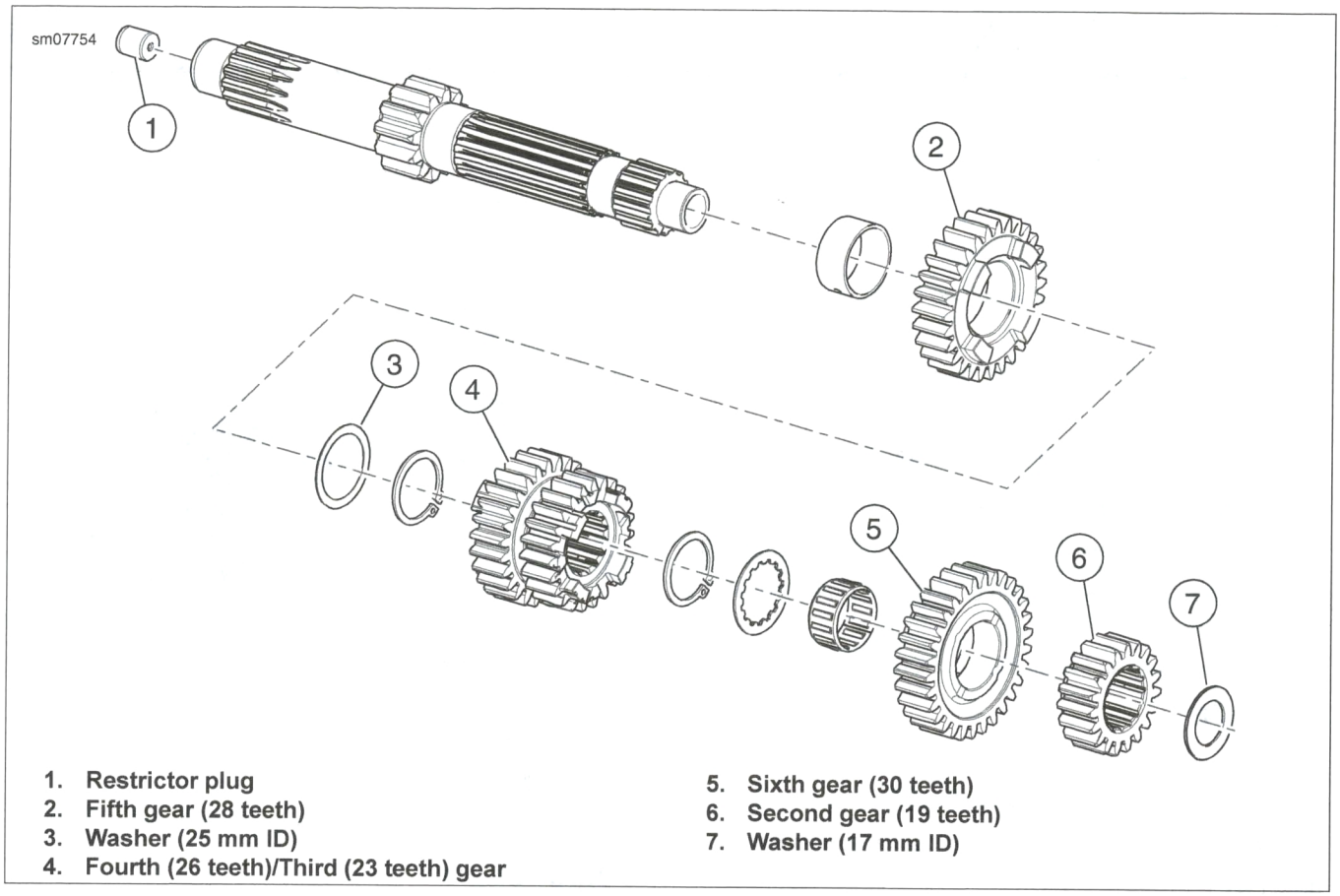

1. Restrictor plug
2. Fifth gear (28 teeth)
3. Washer (25 mm ID)
4. Fourth (26 teeth)/Third (23 teeth) gear
5. Sixth gear (30 teeth)
6. Second gear (19 teeth)
7. Washer (17 mm ID)

Figure 5-21. Input Shaft

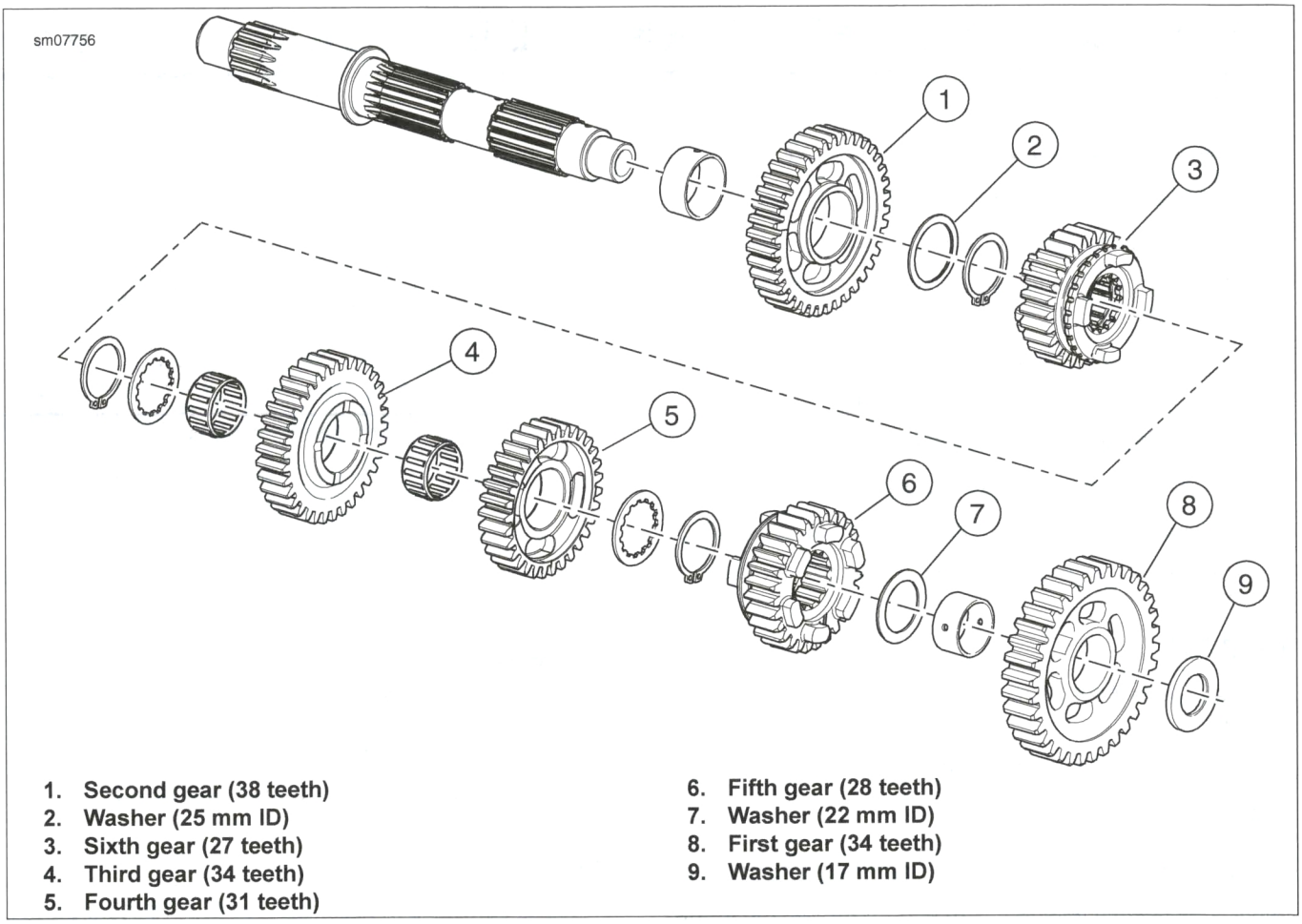

1. **Second gear (38 teeth)**
2. **Washer (25 mm ID)**
3. **Sixth gear (27 teeth)**
4. **Third gear (34 teeth)**
5. **Fourth gear (31 teeth)**
6. **Fifth gear (28 teeth)**
7. **Washer (22 mm ID)**
8. **First gear (34 teeth)**
9. **Washer (17 mm ID)**

Figure 5-22. Output Shaft

COMPLETE

1. Install drum and forks. See 5.8 DRUM AND FORKS.
2. Join crankcase halves. See 4.28 CRANKCASE ASSEMBLY.
3. Install neutral switch. See 8.16 NEUTRAL INDICATOR SWITCH.
4. Install output pulley. See 5.5 OUTPUT PULLEY
5. Install balancer shaft. See 4.23 BALANCER.
6. Install cylinders. See 4.19 CYLINDERS.
7. Install cylinder heads. See 4.14 CYLINDER HEADS.
8. Install cylinder head covers. See 4.12 CYLINDER HEAD COVERS.
9. Install clutch. See 5.7 CLUTCH.
10. Install starter. See 8.5 STARTER.
11. Install engine. See 4.9 REPLACE ENGINE.

PREPARE

1. Remove engine. See 4.9 REPLACE ENGINE.
2. Remove starter. See 8.5 STARTER.
3. Remove clutch. See 5.7 CLUTCH.
4. Remove cylinder head covers. See 4.12 CYLINDER HEAD COVERS.
5. Remove cylinder heads. See 4.14 CYLINDER HEADS.
6. Remove cylinders. See 4.19 CYLINDERS.
7. Remove balancer shaft. See 4.23 BALANCER.
8. Remove output pulley. See 5.5 OUTPUT PULLEY
9. Separate crankcase. See 4.28 CRANKCASE ASSEMBLY.
10. Remove transmission assembly. See 5.9 TRANSMISSION.

REMOVE

1. See Figure 5-23. Remove screws (1) and retainer plate (2).
2. Remove bearings (3-5) using an appropriate bearing puller.

INSTALL

FASTENER	TORQUE VALUE	
Input shaft bearing retainer plate screws	10.0-12.0 Nm	89-106 **in-lbs**

NOTE

See Figure 5-23. Sealed side of output shaft bearing (5) goes down, toward outside of engine.

1. Install bearings (3-5) using an appropriate bearing installer.
2. Install retainer plate (2) and screws (1). Tighten to 10.0-12.0 Nm (89-106 **in-lbs**).

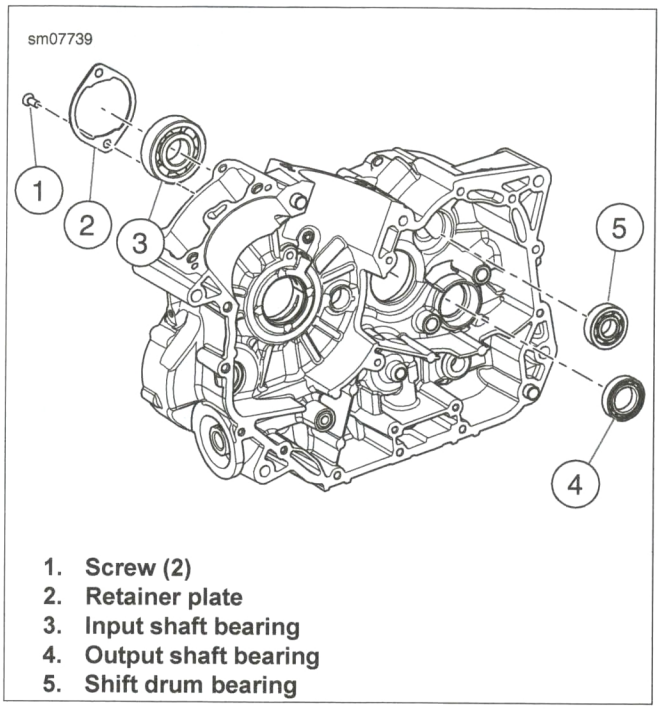

1. **Screw (2)**
2. **Retainer plate**
3. **Input shaft bearing**
4. **Output shaft bearing**
5. **Shift drum bearing**

Figure 5-23. Right Crankcase Bearings

COMPLETE

1. Install transmission assembly. See 5.9 TRANSMISSION.
2. Join crankcase halves. See 4.28 CRANKCASE ASSEMBLY.
3. Install output pulley. See 5.5 OUTPUT PULLEY
4. Install balancer shaft. See 4.23 BALANCER.
5. Install cylinders. See 4.19 CYLINDERS.
6. Install cylinder heads. See 4.14 CYLINDER HEADS.
7. Install cylinder head covers. See 4.12 CYLINDER HEAD COVERS.
8. Install clutch. See 5.7 CLUTCH.
9. Install starter. See 8.5 STARTER.
10. Install engine. See 4.9 REPLACE ENGINE.

PREPARE

1. Remove engine. See 4.9 REPLACE ENGINE.
2. Remove starter. See 8.5 STARTER.
3. Remove clutch. See 5.7 CLUTCH.
4. Remove cylinder head covers. See 4.12 CYLINDER HEAD COVERS.
5. Remove cylinder heads. See 4.14 CYLINDER HEADS.
6. Remove cylinders. See 4.19 CYLINDERS.
7. Remove balancer shaft. See 4.23 BALANCER.
8. Remove output pulley. See 5.5 OUTPUT PULLEY
9. Separate crankcase. See 4.28 CRANKCASE ASSEMBLY.
10. Remove transmission assembly. See 5.9 TRANSMISSION.

REMOVE

1. See Figure 5-24. Remove bearings (1-2) using an appropriate bearing remover.

INSTALL

NOTE

See Figure 5-24. Sealed side of input shaft bearing (2) faces down toward outside of engine.

1. Install bearings (1-2) using an appropriate bearing installer.

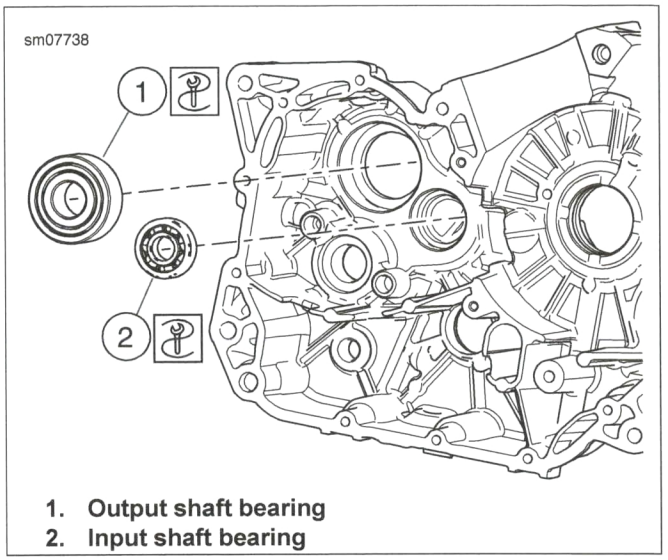

1. Output shaft bearing
2. Input shaft bearing

Figure 5-24. Left Crankcase Bearings

COMPLETE

1. Install transmission assembly. See 5.9 TRANSMISSION.
2. Join crankcase halves. See 4.28 CRANKCASE ASSEMBLY.
3. Install output pulley. See 5.5 OUTPUT PULLEY
4. Install balancer shaft. See 4.23 BALANCER.
5. Install cylinders. See 4.19 CYLINDERS.
6. Install cylinder heads. See 4.14 CYLINDER HEADS.
7. Install cylinder head covers. See 4.12 CYLINDER HEAD COVERS.
8. Install clutch. See 5.7 CLUTCH.
9. Install starter. See 8.5 STARTER.
10. Install engine. See 4.9 REPLACE ENGINE.

NOTES

SUBJECT	PAGE NO.
6.1 FASTENER TORQUE VALUES	6-1
6.2 SPECIFICATIONS	6-2
6.3 AIR CLEANER ASSEMBLY	6-3
6.4 LIFT REAR OF FUEL TANK	6-5
6.5 FUEL TANK	6-6
6.6 FUEL LINE	6-7
6.7 FUEL PRESSURE TEST	6-8
6.8 FUEL PUMP ASSEMBLY	6-9
6.9 VENT TUBE	6-11
6.10 VAPOR VALVE	6-12
6.11 IDLE AIR CONTROL (IAC)	6-13
6.12 FUEL INJECTORS	6-14
6.13 TEMPERATURE MANIFOLD ABSOLUTE PRESSURE (TMAP) SENSOR	6-16
6.14 BREATHER HOSES	6-17
6.15 INDUCTION MODULE	6-18
6.16 OXYGEN (O2) SENSOR	6-19
6.17 MUFFLER	6-20
6.18 EXHAUST SYSTEM	6-21
6.19 INTAKE LEAK TEST	6-23
6.20 PURGE SOLENOID: CALIFORNIA EMISSIONS	6-24
6.21 CHARCOAL CANISTER: CALIFORNIA EMISSIONS	6-25
6.22 PURGE LINES: CALIFORNIA EMISSIONS	6-26

NOTES

FASTENER TORQUE VALUES IN THIS CHAPTER

The table below lists torque values for all fasteners presented in this chapter.

FASTENER	TORQUE VALUE		NOTES
Air cleaner backplate screws	5.0-7.0 Nm	45-62 **in-lbs**	6.3 AIR CLEANER ASSEMBLY, Install
Charcoal canister bracket to frame nut	5.3-6.5 Nm	47-57 **in-lbs**	6.21 CHARCOAL CANISTER: CALIFORNIA EMISSIONS, Install
Charcoal canister to bracket screws	1.7-2.3 Nm	15-20 **in-lbs**	6.21 CHARCOAL CANISTER: CALIFORNIA EMISSIONS, Install
Exhaust shield clamps	2.3-4.5 Nm	21-39 **in-lbs**	6.18 EXHAUST SYSTEM, Assemble
Exhaut to engine nuts	8.0-10.0 Nm	71-88 **in-lbs**	6.18 EXHAUST SYSTEM, Install
Front exhaust pipe clamp	10.0-12.0 Nm	89-106 **in-lbs**	6.18 EXHAUST SYSTEM, Assemble
Fuel pump assembly nuts	4.2-4.5 Nm	38-39 **in-lbs**	6.8 FUEL PUMP ASSEMBLY, Install
Fuel rail screws	2.5-4.5 Nm	23-39 **in-lbs**	6.12 FUEL INJECTORS, Install
IAC screws	2.0-4.0 Nm	18-35 **in-lbs**	6.11 IDLE AIR CONTROL (IAC), Install
Induction module screws	2.5-4.5 Nm	23-39 **in-lbs**	6.11 IDLE AIR CONTROL (IAC), Install
Muffler bracket screws	22.5-27.5 Nm	17-20 ft-lbs	6.18 EXHAUST SYSTEM, Assemble
Muffler clamp	52.0-58.0 Nm	39-42 ft-lbs	6.17 MUFFLER, Install
Muffler nuts	25.0-30.0 Nm	19-22 ft-lbs	6.17 MUFFLER, Install
Muffler nuts	25.0-30.0 Nm	19-22 ft-lbs	6.18 EXHAUST SYSTEM, Install
Oxygen (O2) sensor	16.0-19.0 Nm	12-14 ft-lbs	6.16 OXYGEN (O2) SENSOR, Install
Rear fuel tank screw	24.3-29.7 Nm	18-21 ft-lbs	6.4 LIFT REAR OF FUEL TANK, Secure
TMAP screw	2.5-4.5 Nm	23-39 **in-lbs**	6.13 TEMPERATURE MANIFOLD ABSOLUTE PRESSURE (TMAP) SENSOR, Install

SPECIFICATIONS

Table 6-1. Capacities

ITEM	LITERS	GALLONS
Fuel tank	13.2	3.5
Low fuel warning light on (approximate)	3.0	0.8

Table 6-2. Fuel System Specifications

FUEL SYSTEM	TYPE
Intake	Side draft throttle body
Recommended fuel	87 Octane or higher

Table 6-3. Idle Speed Specifications

ADJUSTMENT	RPM
Normal idle speed	1200 Nominal, non-adjustable

Table 6-4. Fuel Pump Specifications

MEASUREMENT	VALUE
Pressure	310-379 kPA (45-55 psi)
Flow	70 l/h
Current draw	6A or less

PREPARE

1. Remove air filter. See 2.23 INSPECT AIR FILTER.

REMOVE

1. See Figure 6-1. Remove backplate assembly.
   a. Remove screws (1, 5).
   b. Remove backplate (3) with seals (2, 4).
2. See Figure 6-2. Remove clamp and breather hose from backplate.

NOTE

See Figure 6-3. Inner snorkel (5) is threaded.

3. Remove snorkel assembly.
   a. Remove inner snorkel (5).
   b. Remove support (4).
   c. Remove outer snorkel (1).
   d. Remove gasket (3).

INSTALL

FASTENER	TORQUE VALUE	
Air cleaner backplate screws	5.0-7.0 Nm	45-62 **in-lbs**

1. See Figure 6-3. Install snorkel assembly.
   a. Install outer snorkel (1).
   b. Insert gasket (3).
   c. Install support (4).
   d. Install inner snorkel (5).
2. See Figure 6-2. Attach breather hose with clamp to backplate.
3. See Figure 6-1. Install backplate assembly.
   a. Install backplate (3) with seals (2, 4).
   b. Install screws (1, 5). Tighten to 5.0-7.0 Nm (45-62 **in-lbs**).

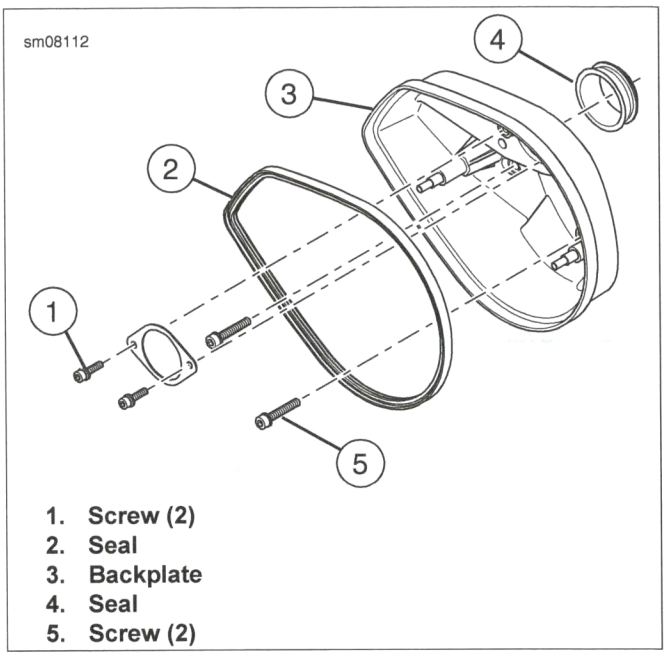

1. **Screw (2)**
2. **Seal**
3. **Backplate**
4. **Seal**
5. **Screw (2)**

Figure 6-1. Backplate Assembly

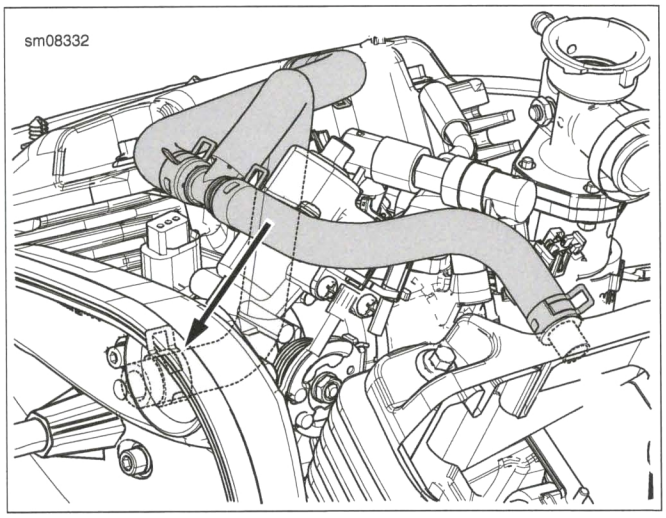

Figure 6-2. Breather Hose

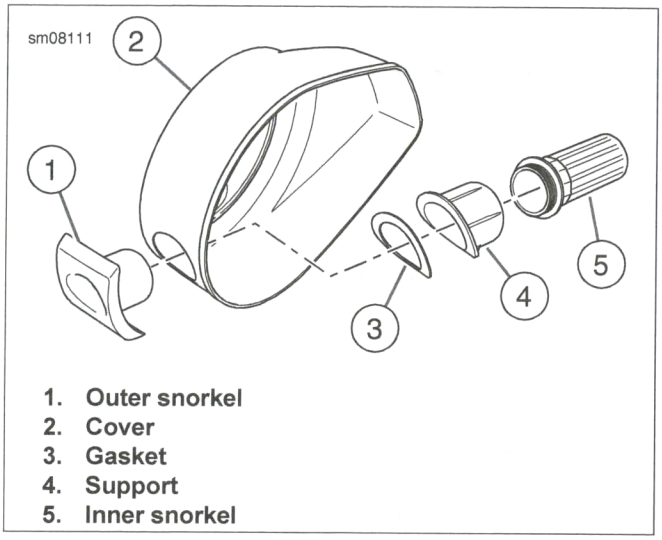

1. Outer snorkel
2. Cover
3. Gasket
4. Support
5. Inner snorkel

Figure 6-3. Snorkel Assembly

COMPLETE

1. Install air filter. See 2.23 INSPECT AIR FILTER.

LIFT REAR OF FUEL TANK 6.4

PREPARE

1. Remove seat. See 3.36 SEAT.

LIFT

1. See Figure 6-4. Lift fuel tank.
   a. Remove screw (1), washer (2) and collar (3).
   b. Lift fuel tank bracket (4) and isolator (5). Support fuel tank as necessary.

SECURE

FASTENER	TORQUE VALUE	
Rear fuel tank screw	24.3-29.7 Nm	18-21 ft-lbs

1. See Figure 6-4. Lower fuel tank.
   a. Insert neck of isolator (5) through hole in bracket (4).
   b. Lower fuel tank bracket (4) and isolator (5) onto tab (6).
   c. Install collar (3), washer (2) and screw (1). Tighten to 24.3-29.7 Nm (18-21 ft-lbs).

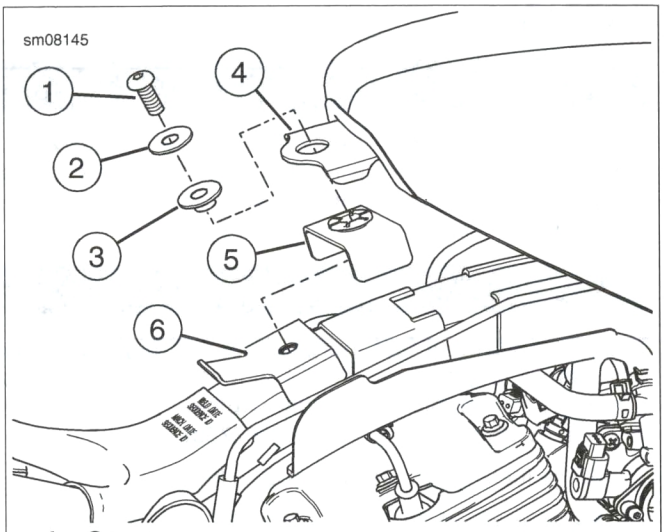

1. **Screw**
2. **Washer**
3. **Collar**
4. **Bracket**
5. **Isolator**
6. **Tab**

Figure 6-4. Rear Mount

COMPLETE

1. Install seat. See 3.36 SEAT.

PREPARE

⚠WARNING

Gasoline is extremely flammable and highly explosive. Keep gasoline away from ignition sources which could result in death or serious injury. See the Safety chapter. (00635c)

⚠WARNING

To prevent spray of fuel, purge system of high-pressure fuel before supply line is disconnected. Gasoline is extremely flammable and highly explosive, which could result in death or serious injury. (00275a)

1. Purge fuel system. See 6.6 FUEL LINE.
2. Remove main fuse. See 8.4 POWER DISCONNECT.
3. Drain fuel tank.
4. Remove seat. See 3.36 SEAT.
5. Lift rear of fuel tank. See 6.4 LIFT REAR OF FUEL TANK.
6. Detach fuel line at quick disconnect fitting. See 6.6 FUEL LINE.
7. Remove fuel pump connector. See 8.8 FUEL PUMP ASSEMBLY.

REMOVE

1. See Figure 6-5. Detach vent line (2) from fuel tank.

NOTE

Pry overlap of cross-over tube clamp (1) to remove. If clamp must be cut, use a sharp high-quality wire cutter.

2. Detach cross-over tube.
   a. Discard clamp (1).
   b. Detach cross-over tube (3).
3. See Figure 6-6. Remove fuel tank.
   a. Slide fuel tank back and away from front mounts (2).
   b. Remove fuel tank.

INSTALL

PART NUMBER	TOOL NAME
HD-41137	HOSE CLAMP PLIERS

1. See Figure 6-6. Install fuel tank on front mounts (2).
2. See Figure 6-5. Attach cross-over tube.
   a. Attach cross-over tube (3).
   b. Install **new** clamp (1) using HOSE CLAMP PLIERS (Part No. HD-41137).
3. Attach vent line (2) to fuel tank.

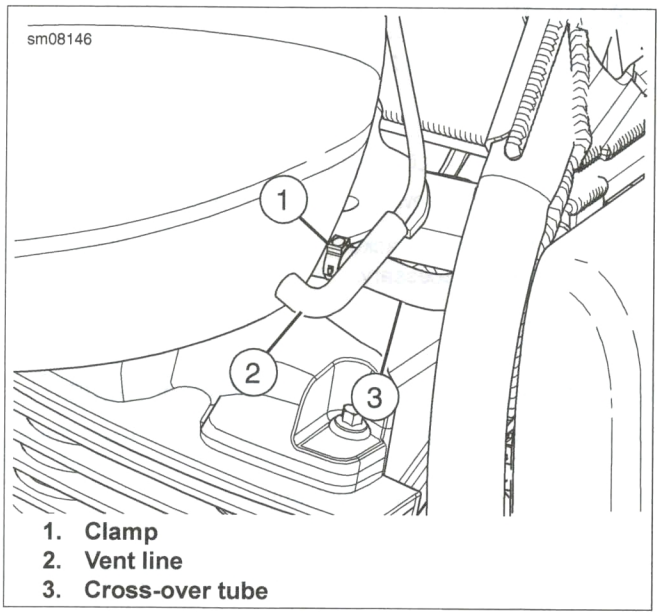

1. **Clamp**
2. **Vent line**
3. **Cross-over tube**

Figure 6-5. Cross-over Tube

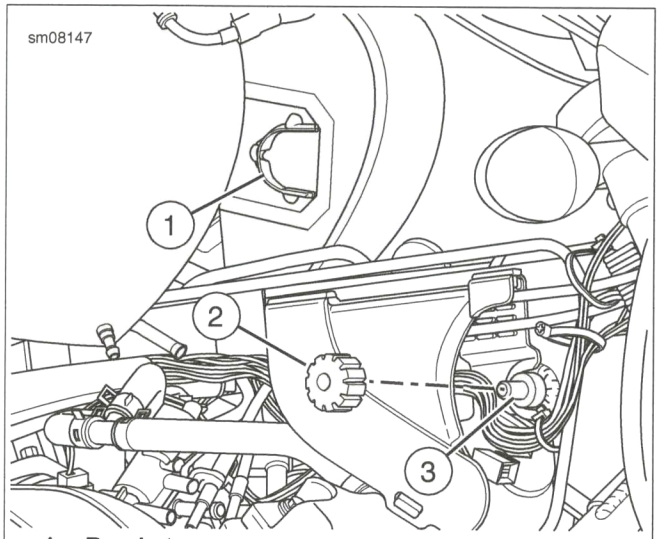

1. **Bracket**
2. **Front mount**
3. **Stud**

Figure 6-6. Front Mount

COMPLETE

1. Attach fuel pump connector. See 8.8 FUEL PUMP ASSEMBLY.
2. Attach fuel line at quick disconnect fitting. See 6.6 FUEL LINE.
3. Install fuel tank. See 6.4 LIFT REAR OF FUEL TANK.
4. Install seat. See 3.36 SEAT.
5. Install main fuse. See 8.4 POWER DISCONNECT.

REMOVE

Purge

1. Remove fuel pump fuse. See 8.3 FUSES AND RELAYS.

⚠WARNING

Gasoline is extremely flammable and highly explosive. Keep gasoline away from ignition sources which could result in death or serious injury. See the Safety chapter. (00635c)

⚠WARNING

To prevent spray of fuel, purge system of high-pressure fuel before supply line is disconnected. Gasoline is extremely flammable and highly explosive, which could result in death or serious injury. (00275a)

2. Purge fuel from fuel supply line.
   a. Start engine.
   b. Allow vehicle to stall.
   c. Operate starter for 3 seconds to remove any remaining fuel.

Remove

1. See Figure 6-7. Remove lower fuel line.
   a. Push up on sleeve of quick disconnect fitting (1).
   b. Remove fuel line (2) from quick disconnect fitting.
   c. Press up on tabs (3) to release lock.
   d. Pull fuel line away from fuel rail.
2. See Figure 6-8. Remove upper fuel line.
   a. Remove fuel tank. See 6.5 FUEL TANK.
   b. Remove hose clamp (2) from bracket (4).
   c. Release lock (3). Detach fuel line (1) from fuel pump.
   d. Remove clip (6) securing quick disconnect fitting to bracket (4).
   e. Remove fuel line (1).

INSTALL

1. See Figure 6-8. Install upper fuel line.
   a. Install fuel line (1).
   b. Install quick disconnect fitting to bracket (4) with clip (6).
   c. Attach fuel line (1) to fuel pump. Press down on lock (3).
   d. Install hose clamp (2) to bracket (4).
   e. Install fuel tank. See 6.5 FUEL TANK.
2. See Figure 6-7. Install lower fuel line.
   a. Attach fuel line to fuel rail.
   b. Engage lock (3) to secure fuel line to fuel rail.
   c. Press up on sleeve of quick disconnect fitting (1).
   d. Insert fuel line (2).
   e. Release sleeve of quick disconnect fitting to secure fuel line.
3. Install fuel pump fuse. See 8.3 FUSES AND RELAYS.

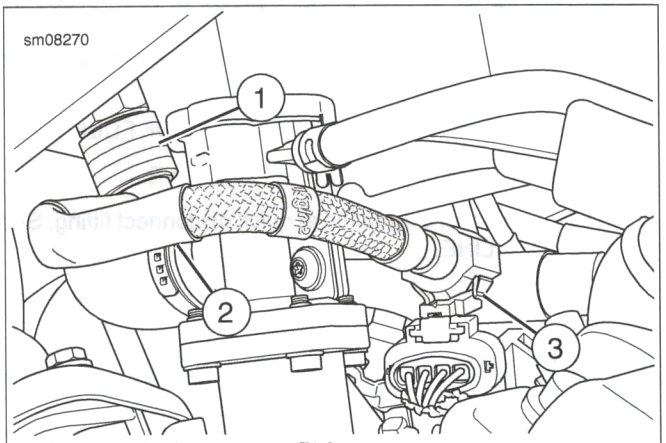

1. **Quick disconnect fitting**
2. **Fuel line**
3. **Lock**

Figure 6-7. Lower Fuel Line

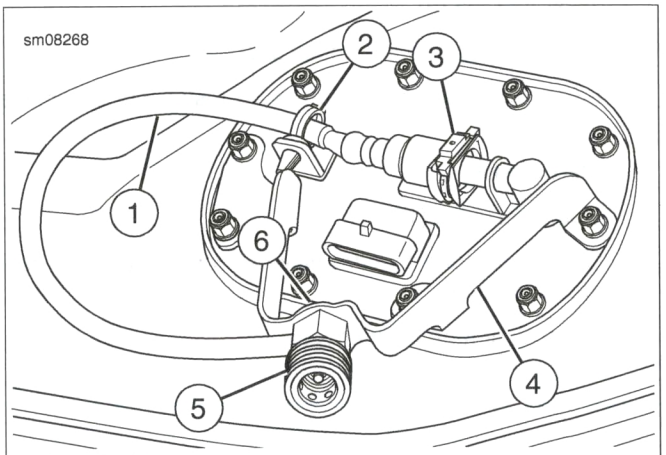

1. **Fuel line**
2. **Hose clamp**
3. **Lock**
4. **Bracket**
5. **Quick disconnect fitting**
6. **Clip**

Figure 6-8. Upper Fuel Line

PREPARE

⚠WARNING

Gasoline is extremely flammable and highly explosive. Keep gasoline away from ignition sources which could result in death or serious injury. See the Safety chapter. (00635c)

⚠WARNING

To prevent spray of fuel, purge system of high-pressure fuel before supply line is disconnected. Gasoline is extremely flammable and highly explosive, which could result in death or serious injury. (00275a)

1. Lift rear of fuel tank. See 6.4 LIFT REAR OF FUEL TANK.
2. Purge fuel supply line. See 6.6 FUEL LINE.
3. Disconnect fuel supply line at quick disconnect fitting. See 6.6 FUEL LINE.

TEST

PART NUMBER	TOOL NAME
HD-41182	FUEL PRESSURE GAUGE
HD-44061	FUEL PRESSURE GAUGE ADAPTER (2)

1. See Figure 6-9. Attach FUEL PRESSURE GAUGE (Part No. HD-41182) and FUEL PRESSURE GAUGE ADAPTER (2) (Part No. HD-44061) to quick disconnect fitting (3) and lower fuel line (5).
2. Place fuel valve in the closed position.
3. Insert clear tube of fuel pressure tester into a suitable container.
4. Start engine.
5. Open fuel valve (1).
6. Open clear tube bleeder valve to remove air from fuel pressure tester.
7. Close clear tube bleeder valve.
8. Operate engine at various speeds. Note pressure gauge reading. Compare readings to Table 6-5.
9. Shut off engine.
10. Open clear tube bleeder to remove pressure from fuel pressure tester.
11. Remove fuel pressure tester.

Table 6-5. Fuel Pressure Range

SPECIFICATION	kPa	PSI
Fuel pressure	380-425	55-62

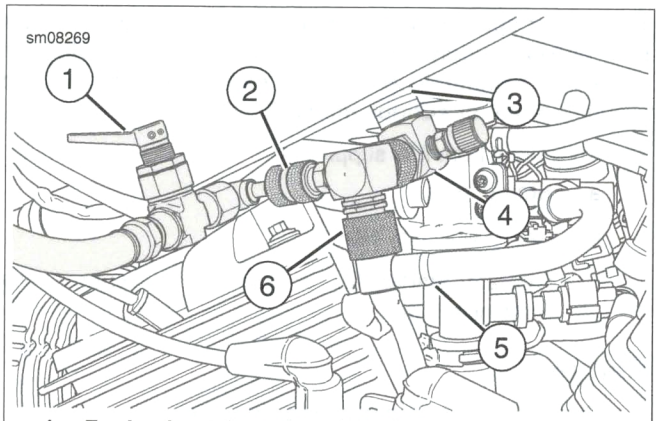

1. **Fuel valve (closed position)**
2. **Valve union**
3. **Upper fuel line quick disconnect fitting**
4. **Upper fuel line adapter**
5. **Lower fuel line**
6. **Lower fuel line adapter**

Figure 6-9. Fuel Pressure Test Fittings

COMPLETE

1. Connect fuel supply line at quick disconnect fitting. See 6.6 FUEL LINE.
2. Secure rear of fuel tank. See 6.4 LIFT REAR OF FUEL TANK.

PREPARE

1. Remove main fuse. See 8.4 POWER DISCONNECT.
2. Remove seat. See 3.36 SEAT.
3. Remove fuel tank. See 6.5 FUEL TANK.
4. Detach fuel line from fuel pump. See 6.6 FUEL LINE.

REMOVE

1. See Figure 6-10. Remove fuel pump assembly.
   a. Remove nuts (1) and washers (2). Discard nuts.
   b. Remove bracket (6).
   c. Remove fuel pump assembly (3).
2. Discard seal (4).

⚠WARNING

Do not use solvents or other products that contain chlorine on plastic fuel system components. Chlorine can degrade plastic fuel system components, which can cause a loss of fuel system pressure or engine stalling and could result in death or serious injury. (000621b)

INSTALL

FASTENER	TORQUE VALUE	
Fuel pump assembly nuts	4.2-4.5 Nm	38-39 **in-lbs**

1. See Figure 6-10. Install **new** seal (4).
2. Install fuel pump assembly.
   a. Install fuel pump assembly (3).
   b. Install bracket (6).

   NOTE

   Do not use washers (2) when securing bracket (6) with nuts (1).

   c. Install washers (2) and **new** nuts (1). Tighten finger-tight.
3. See Figure 6-11. Tighten in order shown to 4.2-4.5 Nm (38-39 **in-lbs**).

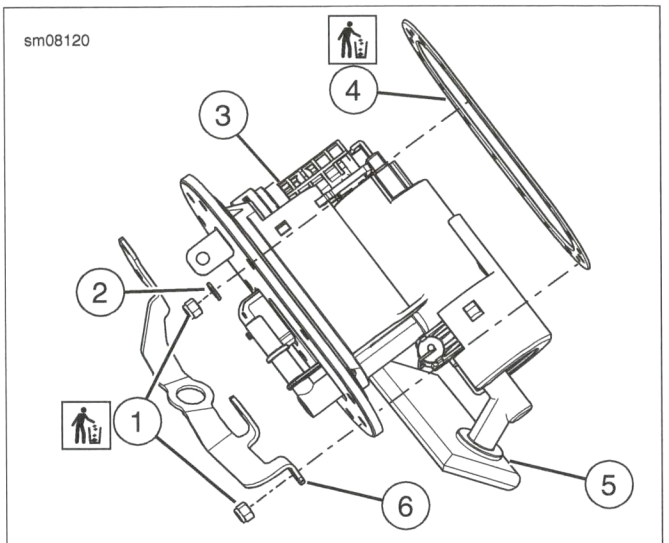

1. **Nut (10)**
2. **Washer (7)**
3. **Fuel pump assembly**
4. **Seal**
5. **Inlet filter**
6. **Bracket**

Figure 6-10. Fuel Pump Assembly

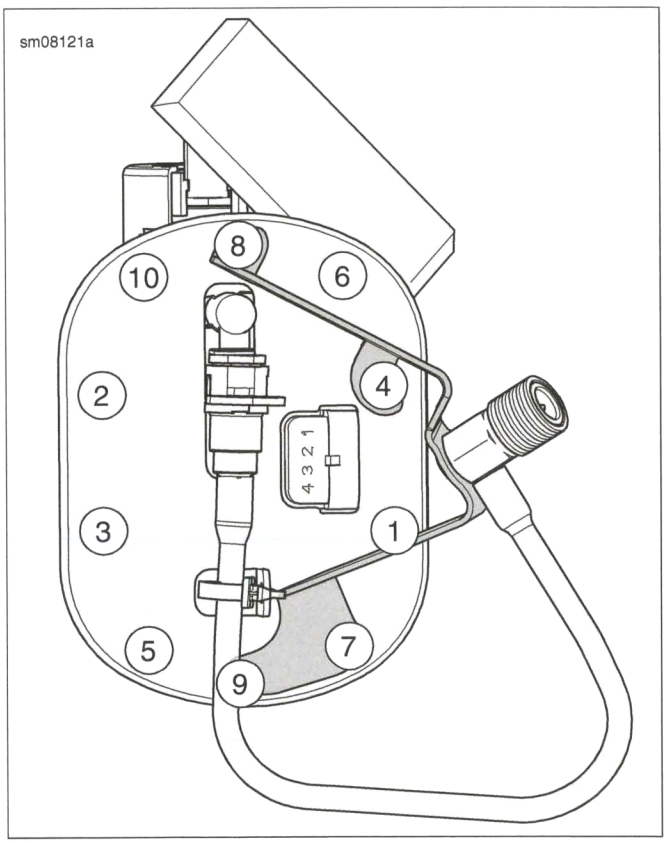

Figure 6-11. Tightening Sequence

COMPLETE

1. Attach fuel line to fuel pump. See 6.6 FUEL LINE.
2. Install fuel tank. See 6.5 FUEL TANK.
3. Install seat. See 3.36 SEAT.
4. Install main fuse. See 8.4 POWER DISCONNECT.

PREPARE

1. Remove seat. See 3.36 SEAT.
2. Remove right side cover. See 3.17 SIDE COVERS.
3. Lift rear of fuel tank. See 6.4 LIFT REAR OF FUEL TANK.

REMOVE

1. See Figure 6-12. Remove upper vent line.
   a. Discard cable strap (4).
   b. Detach upper vent line (1) from vapor valve (2).
   c. Detach upper vent line from fuel tank.
   d. Remove upper vent line.
2. Remove lower vent line.
   a. Detach lower vent line (3) from vapor valve (2).
   b. Remove lower vent line.

INSTALL

1. See Figure 6-12. Install upper vent line.
   a. Install upper vent line.
   b. Attach upper vent line (1) to fuel tank.
   c. Attach upper vent line to vapor valve (2).
   d. Install **new** cable strap (4).
2. Install lower vent line.
   a. Install lower vent line.
   b. Attach lower vent line (3) to vapor valve (2).

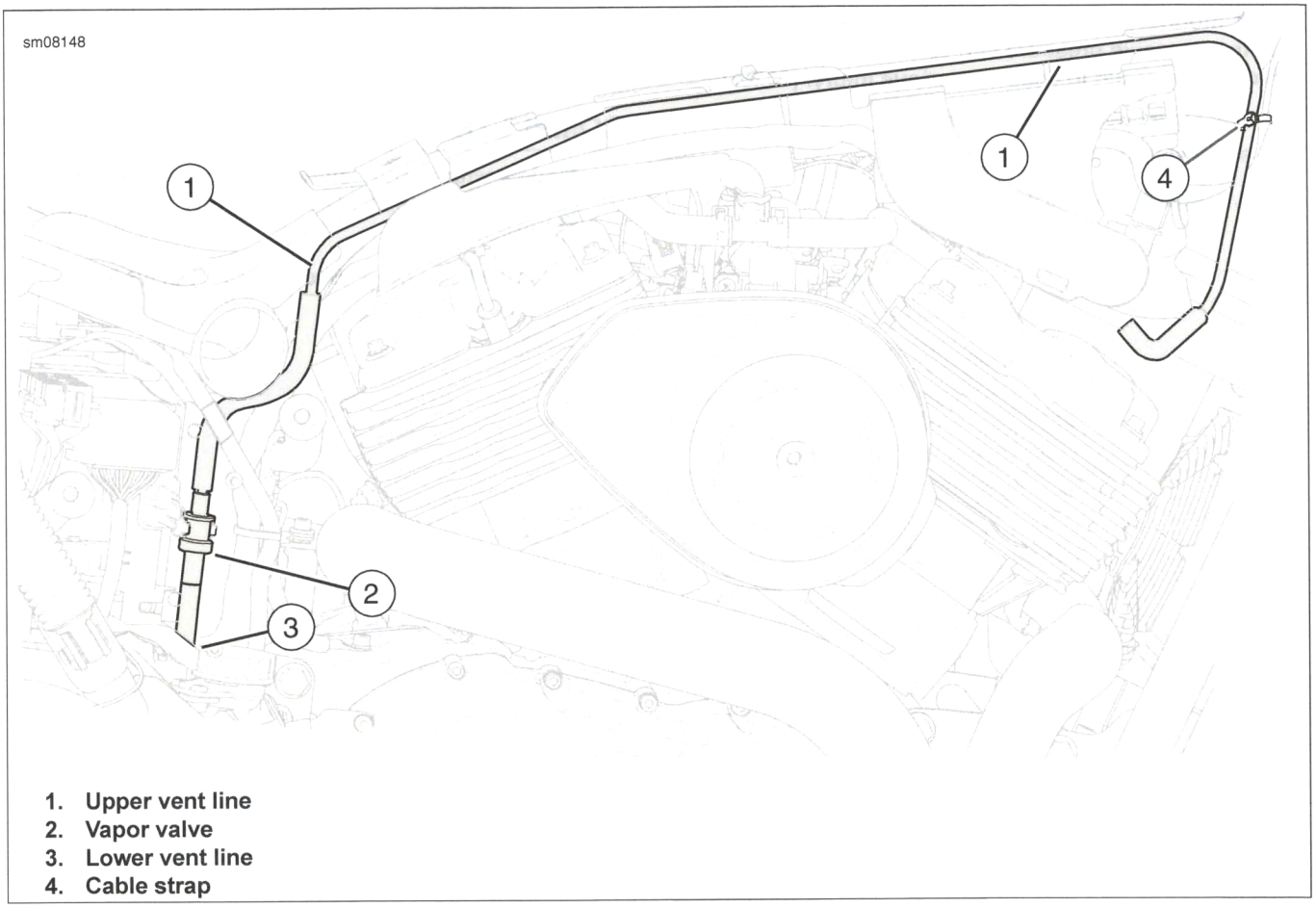

1. **Upper vent line**
2. **Vapor valve**
3. **Lower vent line**
4. **Cable strap**

Figure 6-12. Fuel Tank Vent Line

COMPLETE

1. Secure rear of fuel tank. See 6.4 LIFT REAR OF FUEL TANK.
2. Install right side cover. See 3.17 SIDE COVERS.
3. Install seat. See 3.36 SEAT.

PREPARE

1. Remove right side cover. See 3.17 SIDE COVERS.
2. **Models with purge solenoid:** Detach purge solenoid from battery tray. See 6.20 PURGE SOLENOID: CALIFORNIA EMISSIONS.

REMOVE

1. See Figure 6-13. Remove vapor valve.
   a. Detach hoses from vapor valve.
   b. Remove vapor valve.

INSTALL

⚠WARNING

Excessive pressure can build in the fuel tank if vapor valve is not mounted vertically with long fitting to top. Leaks due to excessive pressure can cause a fire or explosion, which could result in death or serious injury. (00265a)

1. See Figure 6-13. Install vapor valve.
   a. Install vapor valve.
   b. Attach hoses to vapor valve.

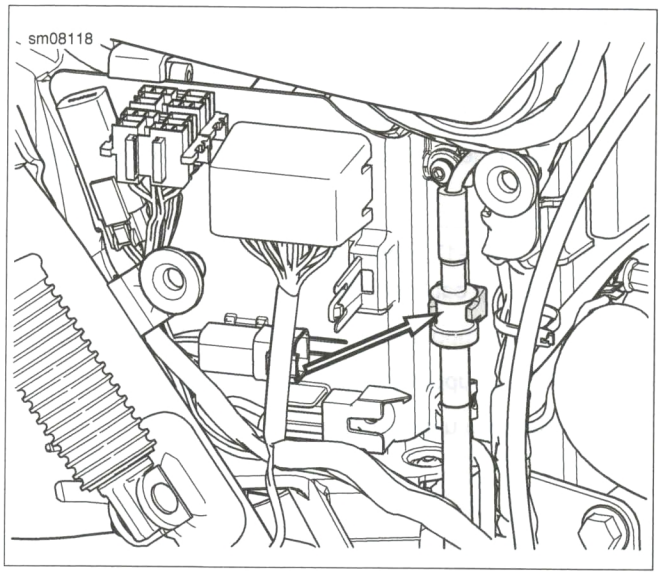

Figure 6-13. Vapor Valve

COMPLETE

1. **Models with purge solenoid:** Attach purge solenoid to battery tray. See 6.20 PURGE SOLENOID: CALIFORNIA EMISSIONS.
2. Install right side cover. See 3.17 SIDE COVERS.

PREPARE

1. Remove main fuse. See 8.4 POWER DISCONNECT.
2. Remove air cleaner assembly. See 6.3 AIR CLEANER ASSEMBLY.
3. Lift rear of fuel tank. See 6.4 LIFT REAR OF FUEL TANK.

REMOVE

1. See Figure 6-14. Detach induction module from intake manifold.
   a. Remove screws (3).
   b. Move induction module (4) away from intake manifold (6).
   c. Discard O-ring (5).
2. Remove IAC.
   a. Remove screws (2).
   b. Remove IAC (1).

INSTALL

FASTENER	TORQUE VALUE	
IAC screws	2.0-4.0 Nm	18-35 **in-lbs**
Induction module screws	2.5-4.5 Nm	23-39 **in-lbs**

1. See Figure 6-14. Install IAC.
   a. Install IAC (1).
   b. Install screws (2). Tighten to 2.0-4.0 Nm (18-35 **in-lbs**).
2. Attach induction module to intake manifold.
   a. Install **new** O-ring (5).
   b. Attach induction module (4) to intake manifold (6).
   c. Install screws (3). Tighten to 2.5-4.5 Nm (23-39 **in-lbs**).

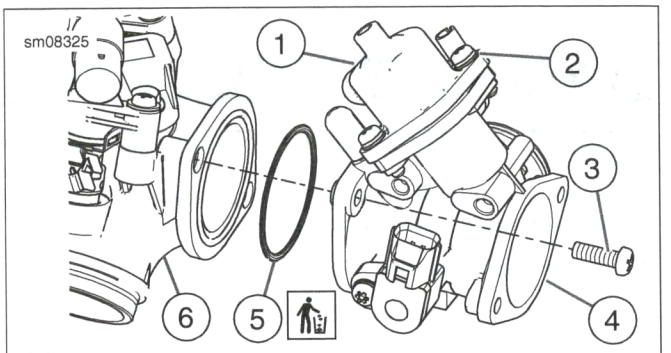

1. **IAC**
2. **Screw (2)**
3. **Screw (2)**
4. **Induction module**
5. **O-ring**
6. **Intake manifold**

Figure 6-14. Idle Air Control (IAC)

COMPLETE

1. Secure rear of fuel tank. See 6.4 LIFT REAR OF FUEL TANK.
2. Install air cleaner assembly. See 6.3 AIR CLEANER ASSEMBLY.
3. Install main fuse. See 8.4 POWER DISCONNECT.

PREPARE

⚠WARNING

Gasoline is extremely flammable and highly explosive. Keep gasoline away from ignition sources which could result in death or serious injury. See the Safety chapter. (00635c)

⚠WARNING

To prevent spray of fuel, purge system of high-pressure fuel before supply line is disconnected. Gasoline is extremely flammable and highly explosive, which could result in death or serious injury. (00275a)

1. Purge fuel supply line. See 6.6 FUEL LINE.
2. Remove main fuse. See 8.4 POWER DISCONNECT.
3. Remove air cleaner assembly. See 6.3 AIR CLEANER ASSEMBLY.
4. Lift rear of fuel tank. See 6.4 LIFT REAR OF FUEL TANK.

REMOVE

1. Disconnect fuel injector connectors.
2. See Figure 6-15. Remove fuel rail and fuel injectors as an assembly.
   a. Remove screws (2).
   b. Remove fuel rail (1) with fuel injectors (3).
3. See Figure 6-16. Remove fuel injectors.
   a. Remove clip (2) securing pipe (1) to fuel injector (4).
   b. Discard O-rings (3, 6).

INSTALL

FASTENER	TORQUE VALUE	
Fuel rail screws	2.5-4.5 Nm	23-39 **in-lbs**

1. See Figure 6-16. Assemble fuel injectors to fuel rail.
   a. Secure fuel injector (4) to pipe (1) with clip (2).
   b. Install **new** O-rings (6) on fuel rail (5).
   c. Attach each pipe (1) to fuel rail (5).
   d. Install **new** O-ring (3) on each fuel injector (4).
2. See Figure 6-15. Install fuel rail with fuel injectors to intake manifold.
   a. Install fuel rail (1) with fuel injectors (3) to intake manifold.
   b. Install screws (2). Tighten to 2.5-4.5 Nm (23-39 **in-lbs**).
3. Connect fuel injector connectors.

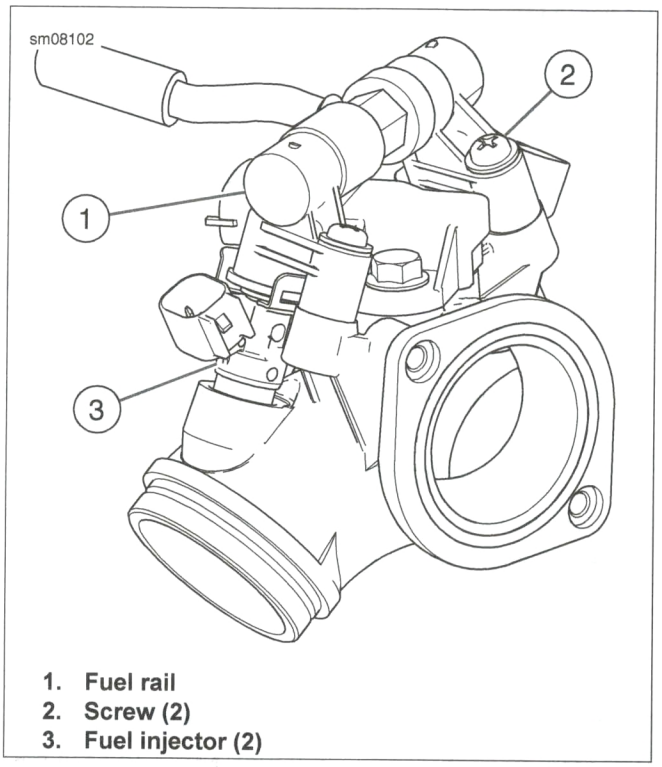

1. **Fuel rail**
2. **Screw (2)**
3. **Fuel injector (2)**

Figure 6-15. Fuel Rail

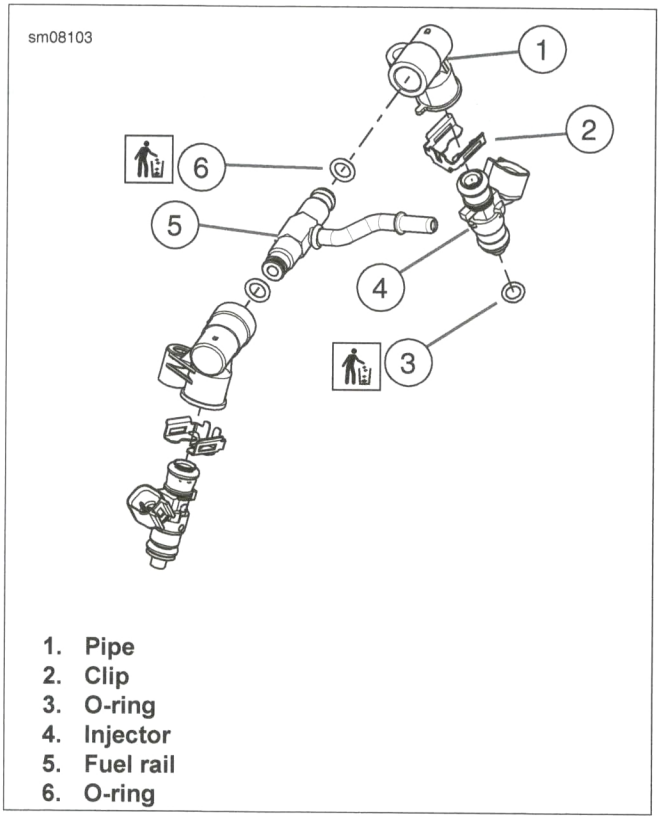

1. **Pipe**
2. **Clip**
3. **O-ring**
4. **Injector**
5. **Fuel rail**
6. **O-ring**

Figure 6-16. Fuel Injectors

COMPLETE

1. Secure rear of fuel tank. See 6.4 LIFT REAR OF FUEL TANK.
2. Install air cleaner assembly. See 6.6 FUEL LINE.
3. Install main fuse. See 8.4 POWER DISCONNECT.

TEMPERATURE MANIFOLD ABSOLUTE PRESSURE (TMAP) SENSOR 6.13

PREPARE

⚠WARNING

Gasoline is extremely flammable and highly explosive. Keep gasoline away from ignition sources which could result in death or serious injury. See the Safety chapter. (00635c)

⚠WARNING

To prevent spray of fuel, purge system of high-pressure fuel before supply line is disconnected. Gasoline is extremely flammable and highly explosive, which could result in death or serious injury. (00275a)

1. Purge fuel supply line. See 6.6 FUEL LINE.
2. Remove main fuse. See 8.4 POWER DISCONNECT.
3. Remove air cleaner assembly. See 6.3 AIR CLEANER ASSEMBLY.
4. Lift rear of fuel tank. See 6.4 LIFT REAR OF FUEL TANK.
5. Remove fuel rail. See 6.12 FUEL INJECTORS.

REMOVE

1. Disconnect TMAP sensor connector.
2. See Figure 6-17. Remove TMAP sensor.
   a. Remove screw (2).
   b. Remove TMAP sensor (1).

INSTALL

FASTENER	TORQUE VALUE	
TMAP screw	2.5-4.5 Nm	23-39 **in-lbs**

1. See Figure 6-17. Install TMAP sensor.
   a. Install TMAP sensor (1).
   b. Install screw (2). Tighten to 2.5-4.5 Nm (23-39 **in-lbs**).
2. Connect TMAP sensor connector.

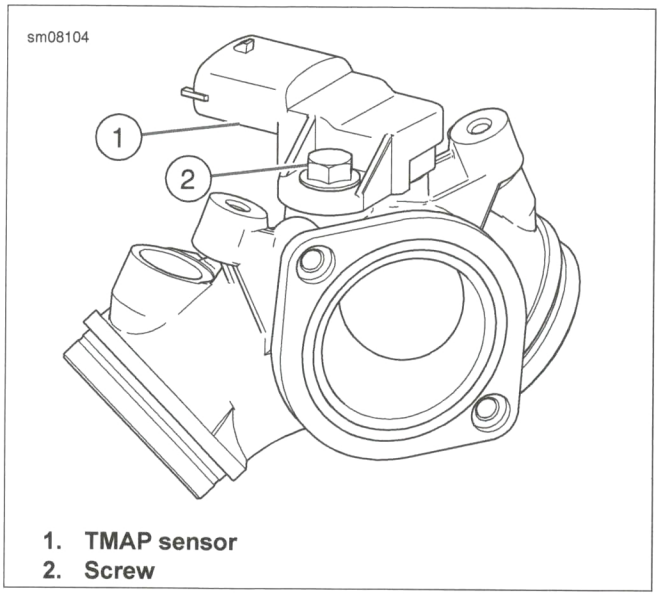

1. TMAP sensor
2. Screw

Figure 6-17. Temperature Manifold Absolute Pressure (TMAP) Sensor

COMPLETE

1. Install fuel rail. See 6.12 FUEL INJECTORS.
2. Secure rear of fuel tank. See 6.4 LIFT REAR OF FUEL TANK.
3. Install air cleaner assembly. See 6.3 AIR CLEANER ASSEMBLY.
4. Install main fuse. See 8.4 POWER DISCONNECT.

PREPARE

1. Lift rear of fuel tank. See 6.4 LIFT REAR OF FUEL TANK.

REMOVE

1. See Figure 6-18. Remove breather hoses.
   a. Remove rear cylinder clamp (1) and hose from rear cylinder.
   b. Remove front cylinder clamp (2) and hose from front cylinder.
   c. Remove backplate clamp (3) and hose from air cleaner backplate.
   d. Remove breather hose assembly from engine.

INSTALL

1. See Figure 6-18. Install breather hoses.
   a. Install breather hose assembly onto engine.
   b. Install hose and backplate clamp (3) to air cleaner backplate.
   c. Install hose and front cylinder clamp (2) to front cylinder.
   d. Install hose and rear cylinder clamp (1) to rear cylinder.

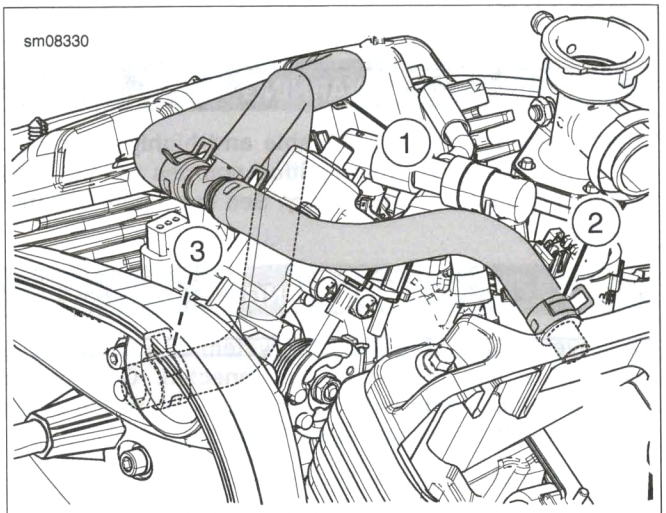

1. **Rear cylinder clamp**
2. **Front cylinder clamp**
3. **Backplate clamp**

Figure 6-18. Breather Hoses

COMPLETE

1. Secure rear of fuel tank. See 6.4 LIFT REAR OF FUEL TANK.

PREPARE

⚠WARNING

Gasoline is extremely flammable and highly explosive. Keep gasoline away from ignition sources which could result in death or serious injury. See the Safety chapter. (00635c)

⚠WARNING

To prevent spray of fuel, purge system of high-pressure fuel before supply line is disconnected. Gasoline is extremely flammable and highly explosive, which could result in death or serious injury. (00275a)

1. Purge fuel supply line. See 6.6 FUEL LINE.
2. Remove main fuse. See 8.3 FUSES AND RELAYS.
3. Remove air cleaner assembly. See 6.3 AIR CLEANER ASSEMBLY.
4. Lift rear of fuel tank. See 6.4 LIFT REAR OF FUEL TANK.
5. Disconnect engine harness connectors from induction module. See 8.31 ENGINE WIRE HARNESS.
6. Remove throttle cables from induction module. See 3.24 THROTTLE CONTROL.

REMOVE

NOTE

Throttle Position Sensor (TPS) is not serviceable. Replace induction module if necessary.

1. See Figure 6-19. Remove induction module.
   a. Remove clamps (1).
   b. Remove induction module (2).

INSTALL

1. See Figure 6-19. Install induction module.
   a. Install induction module (2).
   b. Install clamps (1). Tighten until induction module is secure.

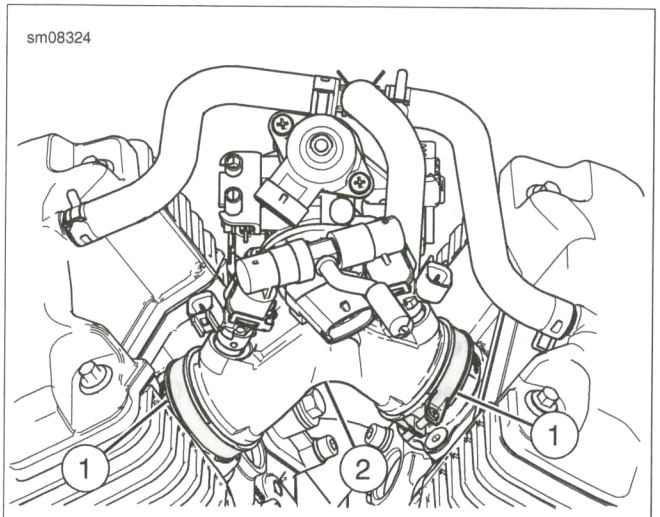

1. Clamp (2)
2. Induction Module

Figure 6-19. Induction Module Clamps

COMPLETE

1. Install throttle cables to induction module. See 3.24 THROTTLE CONTROL.
2. Connect engine harness connectors to induction module. See 8.31 ENGINE WIRE HARNESS.
3. Secure rear of fuel tank. See 6.4 LIFT REAR OF FUEL TANK.
4. Install air cleaner assembly. See 6.3 AIR CLEANER ASSEMBLY.
5. Install main fuse. See 8.4 POWER DISCONNECT.

REMOVE

1. See Figure 6-20. Disconnect O2 sensor (1, 2) connector.
2. Remove O2 sensor.

INSTALL

FASTENER	TORQUE VALUE	
Oxygen (O2) sensor	16.0-19.0 Nm	12-14 ft-lbs

NOTES

- *Do not install sensors that have dropped or have been impacted by other components. Damage to the sensing element can occur.*
- *Replacement sensor assemblies have threads coated with ANTI-SEIZE LUBRICANT and **new** seal rings.*
- *If reusing O2 sensor, replace the gasket. Use a high-quality professional grade side cutter for gasket removal. Make sure larger side of **new** gasket faces exhaust.*
- *If reusing O2 sensor, apply a thin coat of ANTI-SEIZE LUBRICANT to each oxygen sensor.*

1. See Figure 6-20. Install O2 sensor (1, 2). Tighten to 16.0-19.0 Nm (12-14 ft-lbs).
2. Connect O2 sensor connector.

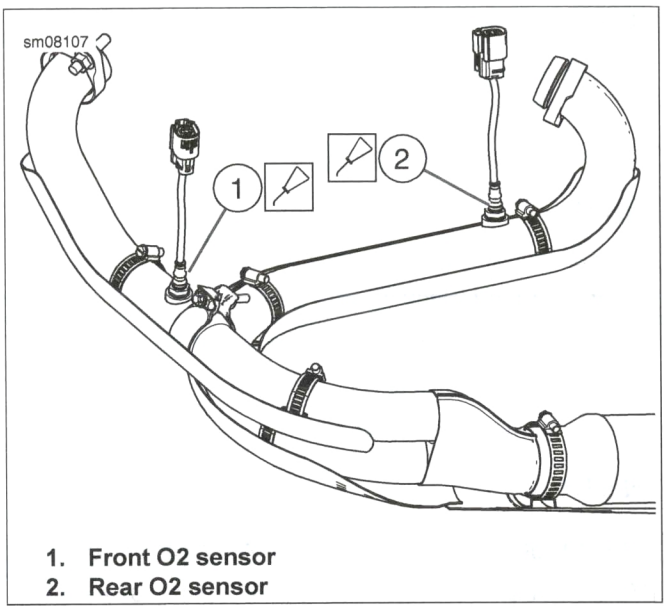

1. Front O2 sensor
2. Rear O2 sensor

Figure 6-20. Oxygen (O2) Sensors

REMOVE

End Cap

1. See Figure 6-21. Remove end cap
   a. Remove screws (8).
   b. Remove end cap (1).

Muffler

1. See Figure 6-21. Remove muffler.
   a. Discard clamp (6).
   b. Remove locknuts (4) and washers (3).
   c. Remove muffler (7).
   d. Remove screws (2).

INSTALL

FASTENER	TORQUE VALUE	
Muffler clamp	52.0-58.0 Nm	39-42 ft-lbs
Muffler nuts	25.0-30.0 Nm	19-22 ft-lbs

End Cap

1. See Figure 6-21. Install end cap.
   a. Install end cap (1).
   b. Install screws (8). Tighten securely.

Muffler

1. See Figure 6-21. Install muffler.
   a. Loosely install **new** clamp (6) to end of muffler.
   b. Install muffler (7) to bracket (5) with screws (2), washers (3) and locknuts (4). Tighten finger-tight.
   c. Tighten clamp (6) to 52.0-58.0 Nm (39-42 ft-lbs).
   d. Tighten locknuts (4) to 25.0-30.0 Nm (19-22 ft-lbs).

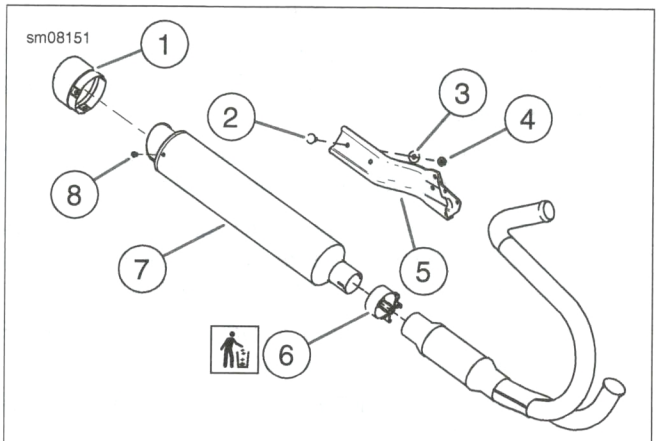

1. **End cap**
2. **Screw (2)**
3. **Washer (2)**
4. **Locknut (2)**
5. **Bracket**
6. **Clamp**
7. **Muffler**
8. **Screw (3)**

Figure 6-21. Muffler

PREPARE

1. Remove main fuse. See 8.4 POWER DISCONNECT.
2. Disconnect O2 sensor connectors. See 6.16 OXYGEN (O2) SENSOR.

REMOVE

1. See Figure 6-22. Remove exhaust system.
   a. Remove nuts (7).
   b. Remove locknuts (4) and washers (3).
   c. Remove exhaust system.
2. Discard gaskets (10).

INSTALL

FASTENER	TORQUE VALUE	
Muffler nuts	25.0-30.0 Nm	19-22 ft-lbs
Exhaut to engine nuts	8.0-10.0 Nm	71-88 **in-lbs**

1. See Figure 6-22. Install **new** gaskets (10).
2. Install exhaust system.
   a. Install exhaust system.
   b. Install washers (3) and locknuts (4). Tighten to 25.0-30.0 Nm (19-22 ft-lbs).
   c. Install nuts (7). Tighten to 8.0-10.0 Nm (71-88 **in-lbs**).

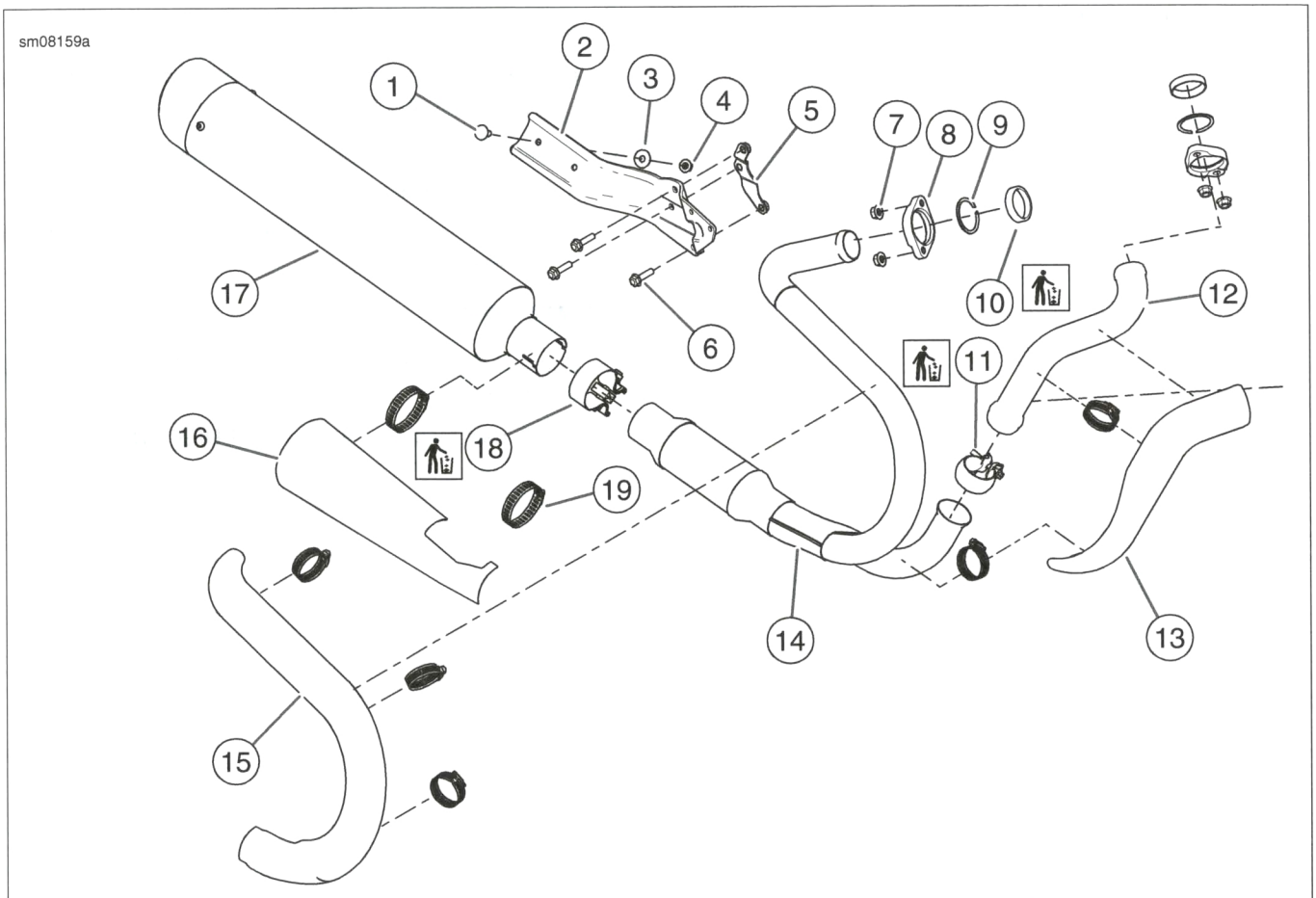

1. **Screw**
2. **Bracket**
3. **Washer (2)**
4. **Locknut (2)**
5. **Plate**
6. **Screw (3)**
7. **Nut (4)**
8. **Clamp (2)**
9. **Retaining ring (2)**
10. **Gasket (2)**
11. **Front exhaust pipe clamp**
12. **Front exhaust pipe**
13. **Front exhaust pipe shield**
14. **Rear exhaust pipe**
15. **Rear shield**
16. **Intermediate shield**
17. **Muffler**
18. **Muffler clamp**
19. **Hose clamp (7)**

Figure 6-22. Exhaust System

DISASSEMBLE

1. See Figure 6-22. Remove front, rear and intermediate shields.
   a. Detach clamps (19).
   b. Remove shields (13, 15, 16).
2. Remove front exhaust pipe.
   a. Discard clamp (11).
   b. Remove front exhaust pipe (12).
3. Remove muffler. See 6.17 MUFFLER.
4. Remove bracket.
   a. Detach rear brake master cylinder from bracket. See 3.13 REAR BRAKE MASTER CYLINDER.
   b. Remove screws (6).
   c. Remove bracket (2).

ASSEMBLE

FASTENER	TORQUE VALUE	
Muffler bracket screws	22.5-27.5 Nm	17-20 ft-lbs
Front exhaust pipe clamp	10.0-12.0 Nm	89-106 **in-lbs**
Exhaust shield clamps	2.3-4.5 Nm	21-39 **in-lbs**

1. See Figure 6-22. Install bracket.
   a. Install bracket (2).
   b. Install screws (6). Tighten to 22.5-27.5 Nm (17-20 ft-lbs).
   c. Attach rear brake master cylinder to bracket. See 3.13 REAR BRAKE MASTER CYLINDER.
2. Install muffler. See 6.17 MUFFLER.
3. Install front exhaust pipe.
   a. Install front exhaust pipe (12).
   b. Install **new** clamp (11). Tighten to 10.0-12.0 Nm (89-106 **in-lbs**).
4. Install front, rear and intermediate shields.
   a. Install shields (13, 15, 16).
   b. Attach clamps (19). Tighten to 2.3-4.5 Nm (21-39 **in-lbs**).

COMPLETE

1. Connect O2 sensor connectors. See 6.16 OXYGEN (O2) SENSOR.
2. Install main fuse. See 8.4 POWER DISCONNECT.

LEAK TESTER

PART NUMBER	TOOL NAME
HD-41417	PROPANE ENRICHMENT KIT

⚠WARNING

Do not allow open flame or sparks near propane. Propane is extremely flammable, which could cause death or serious injury. (00521b)

⚠WARNING

Read and follow warnings and directions on propane bottle. Failure to follow warnings and directions can result in death or serious injury. (00471b)

Parts List

- Standard 14 oz propane cylinder.
- PROPANE ENRICHMENT KIT (Part No. HD-41417).

Tester Assembly

1. See Figure 6-23. Make sure valve knob (6) is closed (fully clockwise).
2. Screw valve assembly (5) onto propane bottle (1).

Tester Adjustment

1. See Figure 6-23. Press and hold trigger button (8).
2. Slowly open valve knob (6) until pellet in flow gauge (7) rises 5-10 SCFH on gauge.
3. Release trigger button.

PROCEDURE

NOTES

- *Propane injected into air cleaner causes false readings. Keep air cleaner cover installed.*
- *Keep propane away from a Screamin' Eagle air cleaner. It has an open backplate which causes false readings.*

1. Run motorcycle to normal operating temperature.
2. Aim nozzle toward possible sources of leak.
3. Press and release trigger button to dispense propane. The tone of the engine changes when propane enters source of leak. Repeat as necessary to detect leak.
4. When test is finished, close valve (turn knob fully clockwise).

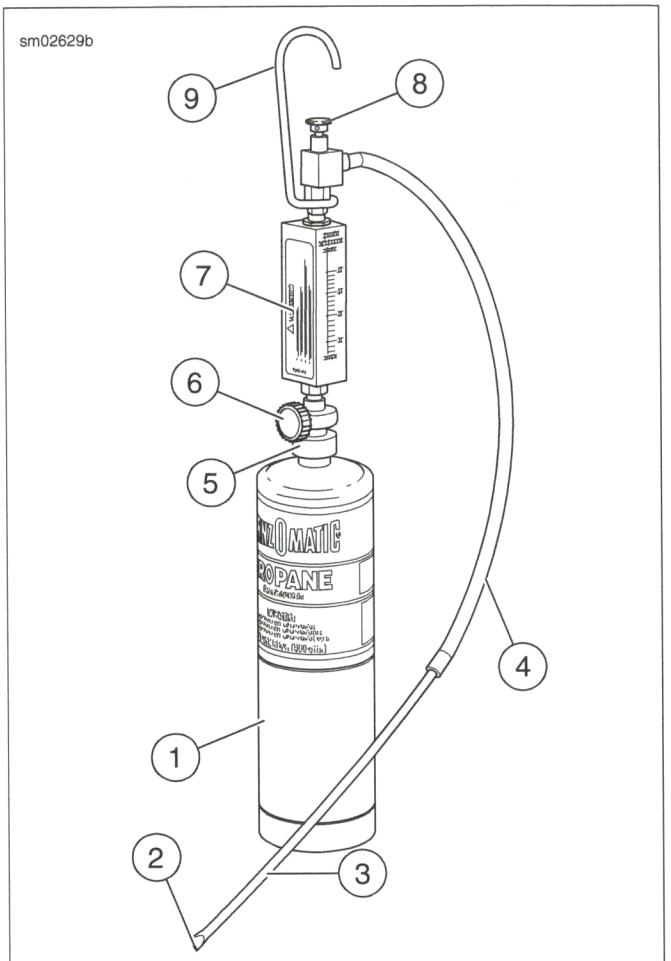

1. **Propane bottle**
2. **Nozzle**
3. **Copper tube**
4. **Hose**
5. **Valve assembly**
6. **Valve knob**
7. **Flow gauge**
8. **Trigger button**
9. **Hanger**

Figure 6-23. Leak Tester

PURGE SOLENOID: CALIFORNIA EMISSIONS 6.20

PREPARE

1. Remove right side cover.

REMOVE

1. Figure 6-24. Remove purge solenoid.
   a. Disconnect purge solenoid connector (2).
   b. Detach solenoid-to-induction module and canister-to-solenoid lines (3, 4).
   c. Pull back slightly on tab (5). Remove purge solenoid (1).

INSTALL

1. Figure 6-24. Install purge solenoid.
   a. Install purge solenoid (1).
   b. Attach solenoid-to-induction module and canister-to-solenoid lines (3, 4).
   c. Connect purge solenoid connector (2).

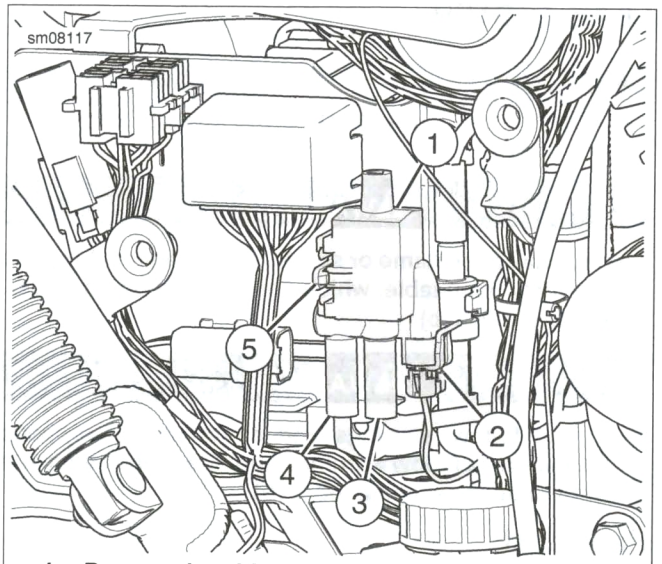

1. Purge solenoid
2. Purge solenoid connector
3. Solenoid-to-induction module line
4. Canister-to-solenoid line
5. Tab

Figure 6-24. Purge Solenoid

COMPLETE

1. Install right side cover.

CHARCOAL CANISTER: CALIFORNIA EMISSIONS 6.21

PREPARE

1. Remove lower belt guard. See 3.21 BELT GUARDS.

REMOVE

1. See Figure 6-25. Remove charcoal canister and bracket.
   a. Detach hoses (1, 2) from charcoal canister.
   b. Remove nut (5) and washer.
   c. Remove screw (7) and bracket (4).
2. Separate charcoal canister from bracket.
   a. Remove screws (6).
   b. Remove charcoal canister (3).

INSTALL

FASTENER	TORQUE VALUE	
Charcoal canister to bracket screws	1.7-2.3 Nm	15-20 **in-lbs**
Charcoal canister bracket to frame nut	5.3-6.5 Nm	47-57 **in-lbs**

1. See Figure 6-25. Attach charcoal canister to bracket.
   a. Install charcoal canister (3) in bracket (4).
   b. Install screws (6). Tighten to 1.7-2.3 Nm (15-20 **in-lbs**).
2. Install charcoal canister and bracket.
   a. Install bracket (4) and screw (7).
   b. Install washer and nut (5). Tighten to 5.3-6.5 Nm (47-57 **in-lbs**).
   c. Attach hoses (1, 2) to charcoal canister.

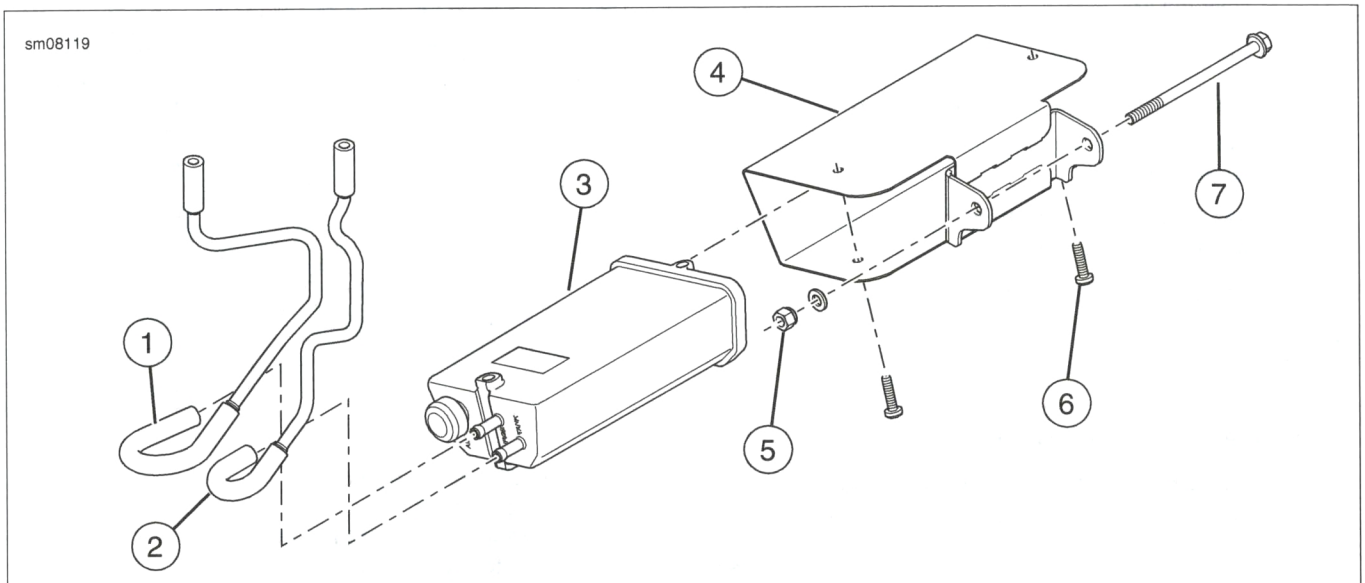

1. **Purge solenoid hose**
2. **Vapor valve hose**
3. **Charcoal canister**
4. **Bracket**
5. **Nut**
6. **Screw (2)**
7. **Screw**

Figure 6-25. Charcoal Canister

COMPLETE

1. Install lower belt guard. See 3.21 BELT GUARDS.

PREPARE

1. Remove right side cover. See 3.17 SIDE COVERS.

NOTE

Lifting rear of fuel tank is only necessary for replacing purge solenoid to induction module line.

2. Lift rear of fuel tank if necessary. See 6.4 LIFT REAR OF FUEL TANK.

REMOVE

1. See Figure 6-26. Remove valve-to-canister line.
   a. Detach valve-to-canister line (4) from vapor valve.
   b. Detach valve-to-canister line (4) from charcoal canister.
   c. Remove valve-to-canister line (4).
2. Remove canister-to-solenoid line.
   a. Detach canister-to-solenoid line (1) from charcoal canister (5).
   b. Detach canister-to-solenoid line (1) from purge solenoid (2).
   c. Remove canister-to-solenoid line (1).
3. Remove solenoid-to-induction module line.
   a. Detach solenoid-to-induction module line (3) from purge solenoid.
   b. See Figure 6-27. Detach solenoid-to-induction module line from induction module.
   c. Remove solenoid-to-induction module line.

INSTALL

NOTE

Vapor valve is located behind purge solenoid.

1. See Figure 6-26. Install valve-to-canister line.
   a. Place line valve-to-canister (4) into position.
   b. Attach line valve-to-canister (4) to charcoal canister (5).
   c. Attach line valve-to-canister (4) to vapor valve.
2. Install canister to solenoid line.
   a. Place line canister-to-solenoid line (1) into position.
   b. Attach line canister-to-solenoid line (1) to charcoal canister (5).
   c. Attach line canister-to-solenoid line (1) to purge solenoid (2).
3. Install solenoid-to-induction module line.
   a. See Figure 6-27. Place solenoid-to-induction module line into position.
   b. Attach solenoid-to-induction module line to induction module.
   c. See Figure 6-26. Attach solenoid-to-induction module line (3) to purge solenoid (2).

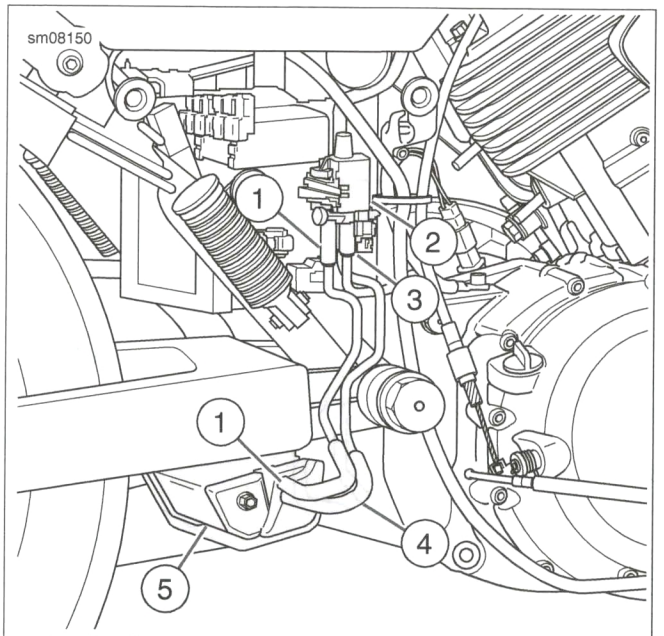

1. Canister-to-solenoid line
2. Purge solenoid
3. Solenoid-to-induction module line
4. Valve-to-canister line
5. Charcoal canister

Figure 6-26. Purge Lines

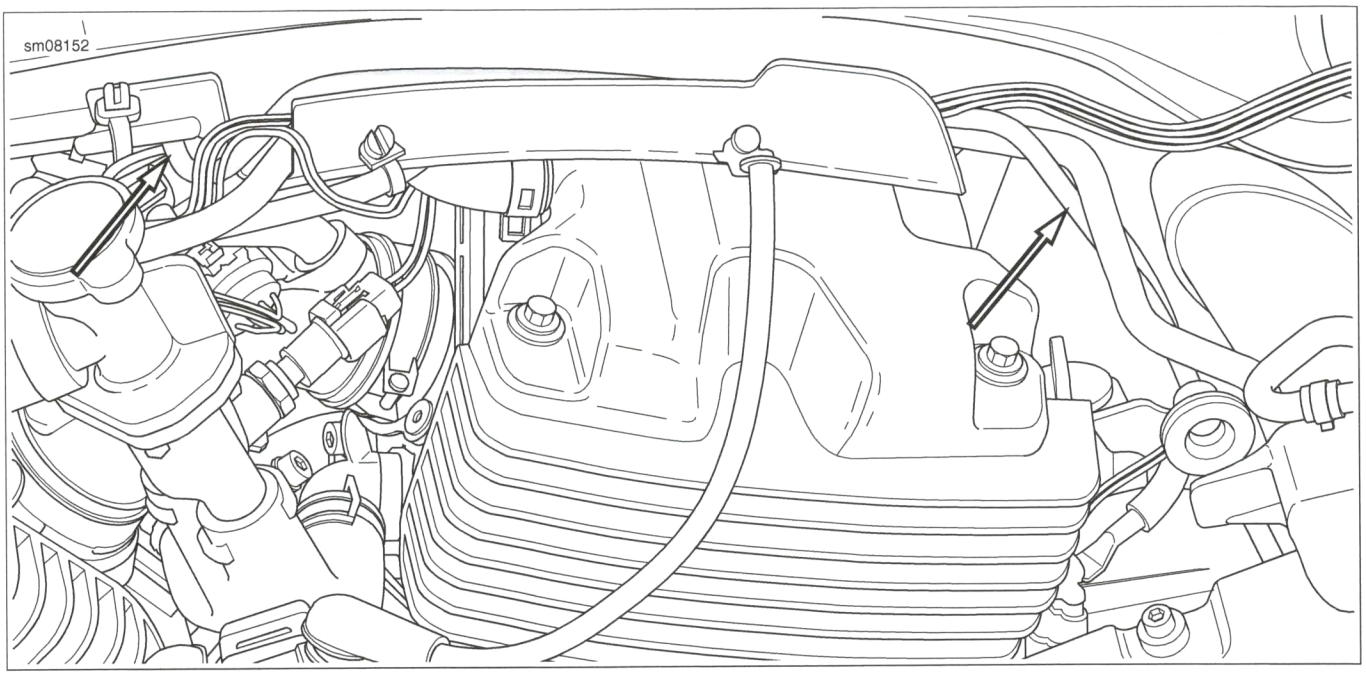

Figure 6-27. Solenoid To Induction Module Line

COMPLETE

1. Secure rear of fuel tank after service. See 6.4 LIFT REAR OF FUEL TANK.
2. Install right side cover. See 3.17 SIDE COVERS.

NOTES

SUBJECT	PAGE NO.
7.1 FASTENER TORQUE VALUES	7-1
7.2 SPECIFICATIONS	7-2
7.3 COOLANT FLOW	7-3
7.4 DIAGNOSE AND TEST	7-4
7.5 COOLANT	7-7
7.6 THERMOSTAT HOUSING	7-9
7.7 COOLANT PUMP	7-10
7.8 COOLANT OVERFLOW TANK	7-12
7.9 COOLANT HOSES	7-13
7.10 ENGINE COOLANT TEMPERATURE (ECT) SENSOR	7-15
7.11 RADIATOR	7-16

NOTES

FASTENER TORQUE VALUES IN THIS CHAPTER

The table below lists torque values for all fasteners presented in this chapter.

FASTENER	TORQUE VALUE		NOTES
Coolant drain screw	10.0-12.0 Nm	89-106 **in-lbs**	7.5 COOLANT, Drain and Fill Cooling System
Coolant overflow tank screws	2.3-3.3 Nm	21-29 **in-lbs**	7.8 COOLANT OVERFLOW TANK, Install
Coolant pump and cover screws	10.0-12.0 Nm	89-106 **in-lbs**	7.7 COOLANT PUMP, Install
Coolant thermostat housing screws	9.0-11.0 Nm	80-97 **in-lbs**	7.6 THERMOSTAT HOUSING, Install
Engine coolant temperature sensor (ECT)	15.0 Nm	133 **in-lbs**	7.10 ENGINE COOLANT TEMPERATURE (ECT) SENSOR, Install
Radiator screws	9.0-11.0 Nm	80-97 **in-lbs**	7.11 RADIATOR, Install
Radiator shroud screws	9.0-11.0 Nm	80-97 **in-lbs**	7.11 RADIATOR, Install

GENERAL

Table 7-1. Capacities

ITEM	LITERS	QUARTS
Engine coolant (without overflow tank)	1.3	1.4
Engine coolant (with overflow tank)	1.6	1.7

Table 7-2. Coolant Pressure

ITEM	KPA	PSI
Cap lower limit	124	18
Rated cap pressure	138	20
Cap upper limit	152	22

Table 7-3. Coolant Temperatures

ITEM	°C	°F
Thermostat initially opens	77	170.6
Thermostat fully open	91	195.8

Table 7-4. Fan Operation

STATUS	°C	°F
On	110	230
Off	105	221

OPERATION

Engine Below Operating Temperature

See Figure 7-1. When engine is below operating temperature the thermostat [in the thermostat housing (3)], is closed. Coolant in the engine coolant cavities (6) warms up as the engine operates.

Coolant Flow With Engine At Operating Temperature

1. Once the coolant temperature reaches a certain temperature, the thermostat opens and coolant begins to flow.
   a. Radiator (10) to coolant pump (7).
   b. Coolant pump (7) to engine coolant cavities (6).
   c. Engine coolant cavities (6) to thermostat housing (3).
   d. Thermostat housing (3) to radiator (10).

Coolant Overflow Tank

1. As temperature increases in the cooling system, so does pressure. To control pressure, the radiator cap (2) allows coolant to flow to the coolant overflow tank (5) as needed.
   a. Once coolant pressure reaches a preset value, a valve in the radiator cap opens allowing coolant to escape to the coolant overflow tank.
   b. Once coolant pressure decreases below the preset value, the valve in the radiator cap closes.
2. As temperature decreases in the cooling system, so does pressure. Once temperature decreases enough, a vacuum is created in the cooling system. To control vacuum, the radiator cap (2) allows coolant to flow back into the cooling system as needed.
   a. Once coolant vacuum reaches a preset value, a secondary valve in the radiator cap opens. Coolant is then drawn back into the cooling system.
   b. Once coolant vacuum decreases below the preset value, the valve in the radiator cap closes.

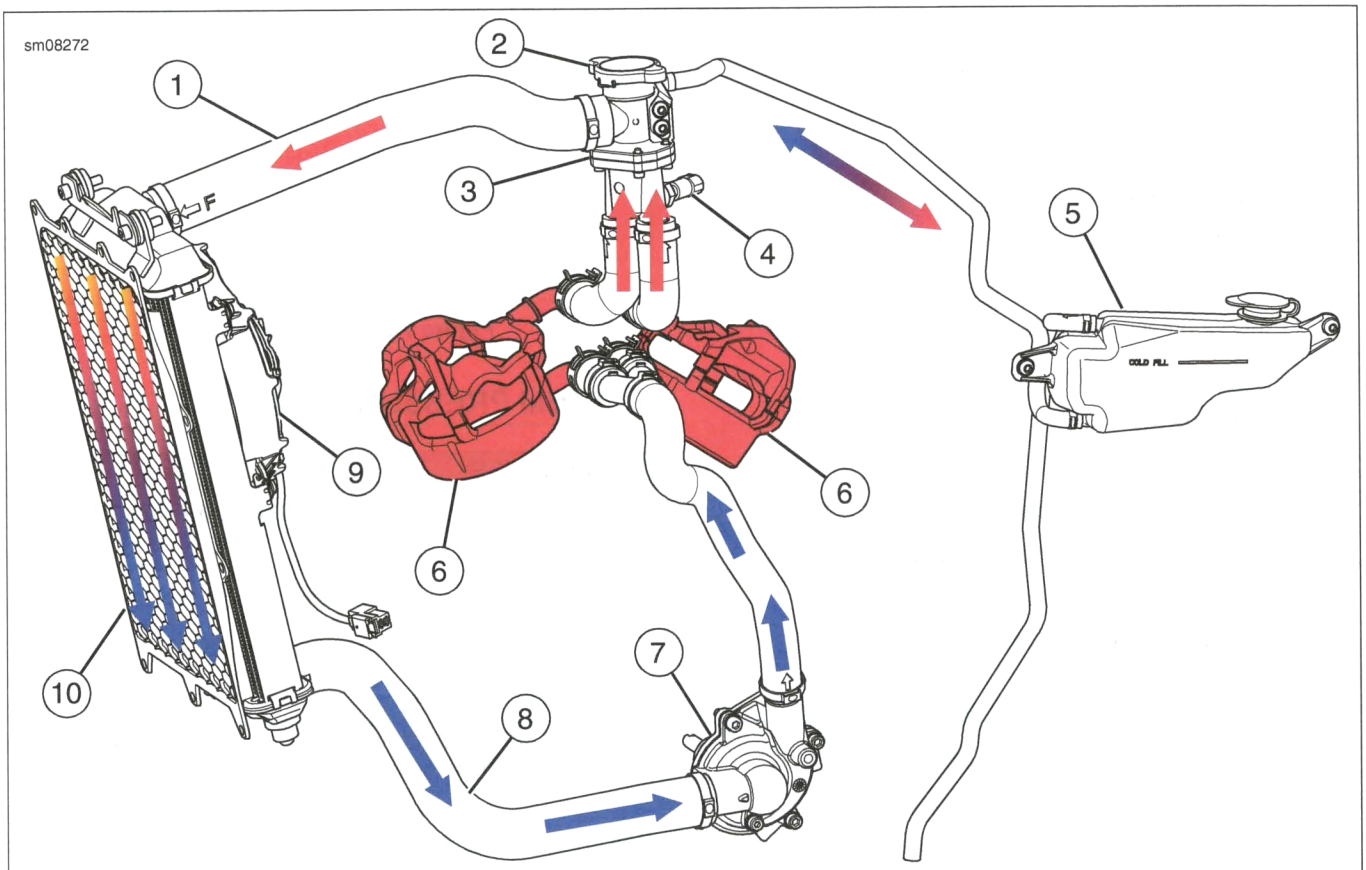

1. Inlet hose
2. Radiator cap
3. Thermostat housing
4. Engine coolant temperature (ECT) sensor
5. Coolant overflow tank
6. Engine coolant cavity (2)
7. Coolant pump
8. Outlet hose
9. Cooling fan
10. Radiator

Figure 7-1. Coolant Flow

TROUBLESHOOTING

⚠WARNING

The Troubleshooting section of this manual is a guide to diagnose problems. Read the appropriate sections of this manual before performing any work. Improper repair and/or maintenance could result in death or serious injury. (00528b)

⚠WARNING

Do not loosen or remove pressure cap when engine is hot. The cooling system is under pressure and hot coolant and steam can escape from pressure cap, which could cause severe burns. Allow engine to cool before servicing the cooling system. (00091b)

Low Engine Temperature

- Thermostat stuck open.

High Engine Temperature

- Thermostat stuck closed.
- Blocked hoses, pipes or passages.
- Restricted air flow through radiator.
- Defective cooling fan.
- Faulty coolant pump.
- Low coolant level.
- Air in system.
- Defective pressure cap.
- Defective engine coolant sensor.

Coolant Leaks

- Pressure cap not properly installed.
- Damaged pressure cap gasket.
- Deteriorated O-rings on coolant pump or manifolds.
- Leaking hose or hose connection.

PRESSURE CAP TEST

PART NUMBER	TOOL NAME
HD-45335	COOLANT SYSTEM PRESSURE TESTER

Test pressure cap for correct operating range when changing antifreeze or any time cooling system maintenance is performed.

1. Remove pressure cap.
2. Inspect gasket and springs of cap for wear and damage.

NOTE

Wet cap upper sealing gasket before installing onto adapter.

3. See Figure 7-2. Connect COOLANT SYSTEM PRESSURE TESTER (Part No. HD-45335) to pressure cap.
4. Pump handle until pressure valve in cap opens.
5. Replace pressure cap if:
   a. Vents below low limit, 124 kPa (18 psi).
   b. Vents above high limit, 152 kPa (22 psi).
   c. Pressure falls rapidly when pressurized within range.
6. Remove adapter and cap.

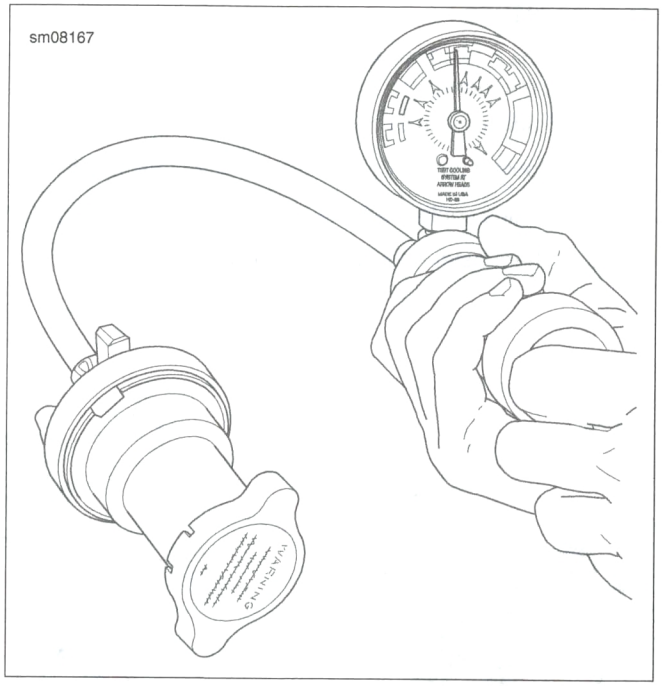

Figure 7-2. Pressure Cap Test

SYSTEM PRESSURE TEST

PART NUMBER	TOOL NAME
HD-45335	COOLANT SYSTEM PRESSURE TESTER

1. Lift rear of fuel tank. 6.4 LIFT REAR OF FUEL TANK.
2. Verify that coolant is at proper level. See 7.5 COOLANT.
3. Remove filler cap.
4. Clean and inspect filler neck, upper and lower sealing seats, overflow tube and overflow tank.

NOTE

Wet the upper sealing surfaces before installing adapter onto tester head.

5. Connect COOLANT SYSTEM PRESSURE TESTER (Part No. HD-45335) to filler neck (2).

NOTE

Never exceed upper limit rating of pressure cap. Excessive pressure can rupture cooling pipes, hoses and radiator.

6. Pump tester until pressure reaches 138 kPa (20 psi).

7. Observe pressure gauge and proceed as indicated in Table 7-5.
8. Release system pressure before removing tester from filler neck.

Table 7-5. System Pressure Test

NEEDLE MOVEMENT	LEAK	ACTION
Holds steady for 2 minutes	None	None
Drops slowly	Small	Dye test
Drops quickly	Major	Visual

FREEZE POINT TEST

PART NUMBER	TOOL NAME
HD-23688	COOLANT TESTER (F)
HD-26568	COOLANT TESTER (C)

1. Remove pressure cap.
2. Place a few drops of coolant from the filler neck of the radiator on the prism of either the COOLANT TESTER (C) (Part No. HD-26568) or the COOLANT TESTER (F) (Part No. HD-23688).
3. Hold the prism up to a light.
4. See Figure 7-3. The coolant freeze point is the mark on the ETHYLENE GLYCOL temperature scale (1) where the dark area (2) begins.

⚠WARNING

Coolant mixture contains toxic chemicals, which may be fatal if swallowed. If swallowed, do not induce vomiting; call a physician immediately. Use in a well ventilated area. Irritation to skin or eyes can occur from vapors or direct contact. In case of skin or eye contact, flush thoroughly with water and go to hospital, if necessary. Dispose of used coolant according to federal, state and local regulations. (00092a)

NOTICE

Use only Genuine Harley-Davidson Extended Life Antifreeze and Coolant. Use of other coolants/mixtures may lead to engine damage. (00179b)

5. Compare the freeze point of the coolant to the anticipated operating or storage temperatures. Replace as required. See 7.5 COOLANT.
   a. If the indicated freeze point is less than specified on the container, replace with GENUINE HARLEY-DAVIDSON EXTENDED LIFE ANTIFREEZE & COOLANT (HD-99822-02).
   b. To match anticipated cold temperatures that exceed that specified for the Harley-Davidson antifreeze, replace with a mixture of de-ionized water and undiluted ethylene glycol according to the directions on the container of the undiluted ethylene glycol.
6. Replace the pressure cap.

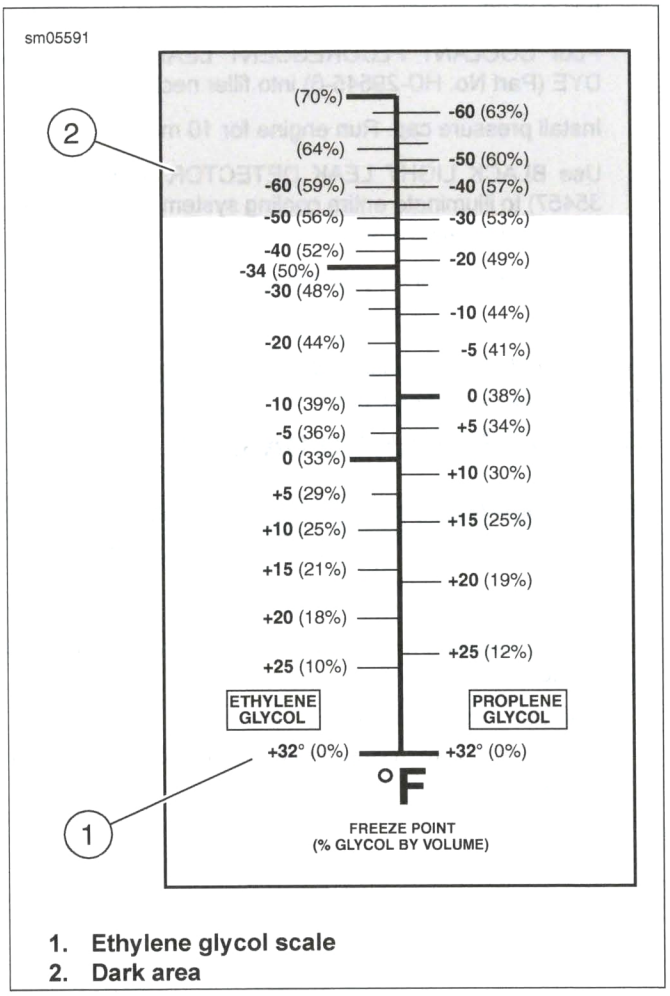

1. **Ethylene glycol scale**
2. **Dark area**

Figure 7-3. Coolant Tester Calibration Scale (Fahrenheit)

LEAK DETECTION DYE TEST

PART NUMBER	TOOL NAME
HD-29545-6	COOLANT FLUORESCENT LEAK DETECTION DYE
HD-35457	BLACK LIGHT LEAK DETECTOR

1. Lift rear of fuel tank. 6.4 LIFT REAR OF FUEL TANK
2. Verify that coolant level is at proper level. See 7.5 COOLANT.
3. Remove filler cap.
4. Remove an amount of coolant equal to the amount of dye being used.
5. Pour COOLANT FLUORESCENT LEAK DETECTION DYE (Part No. HD-29545-6) into filler neck.
6. Install pressure cap. Run engine for 10 minutes.
7. Use BLACK LIGHT LEAK DETECTOR (Part No. HD-35457) to illuminate entire cooling system. A yellow fluorescence indicates a leak.
8. Inspect engine oil for yellow dye.

NOTE

Dye in oil indicates a possible damaged engine head gasket. Drain and replace contaminated oil.

TESTS FOR LEAKING GASKET

PART NUMBER	TOOL NAME
HD-45335	COOLANT SYSTEM PRESSURE TESTER

Perform the following tests if a leak exists but no evidence of a leak is found.

1. Start and run cold engine.
   a. White smoke from exhaust system indicates a blown gasket.
2. Run engine. Shut off engine.
   a. Remove oil level dipstick. Light-colored foam on dipstick indicates a blown gasket.
   b. Open oil drain plug. Drain a small amount of oil. Water or coolant drains out first if gasket is blown.
3. Install COOLANT SYSTEM PRESSURE TESTER (Part No. HD-45335).

⚠WARNING

Disconnecting spark plug cable with engine running can result in electric shock and death or serious injury. (00464b)

NOTES

- *Do not allow pressure to build up past maximum for system. If pressure rises past maximum, turn off engine and turn butterfly pressure valve perpendicular to tester head to release pressure.*
- *Do not continue to run engine unattended with COOLANT SYSTEM PRESSURE TESTER installed. There is no safety valve with the pressure cap removed and the COOLANT SYSTEM PRESSURE TESTER installed.*

4. Start cold engine and idle engine to normal operating temperature.
   a. If gauge indicates fast pressure buildup, a gasket is leaking.
   b. If pressure does not build up immediately, pump the tester to 138 kPa (20 psi).
   c. If gauge needle vibrates, the cylinder head gasket for that cylinder leaks. Replace head gasket.
   d. Turn off engine. Disable one spark plug at the coil. turn ON engine. Repeat for other cylinder. The needle stops vibrating when spark is removed from leaking cylinder.

NOTE

Always replace engine oil after replacing cylinder head gasket.

PREPARE

1. Remove left side cover. See 3.17 SIDE COVERS.
2. Lift rear of fuel tank. See 6.4 LIFT REAR OF FUEL TANK.

CHECK COOLANT LEVEL

⚠CAUTION

At operating temperature, radiators and oil coolers contain hot fluids. Contact with a radiator or oil cooler can result in minor or moderate burns. (00141b)

NOTE

- *Check coolant level with engine cold and motorcycle upright.*
- *If the coolant bottle is empty when the engine is cold, inspect the system for leaks. Repair as needed. Fill system with coolant and purge any trapped air.*

1. See Figure 7-4. Check coolant level.
   a. Check that coolant level is at or slightly above the COLD FILL line (2).
2. If level is below COLD FILL line, add coolant.
   a. Remove overflow cap (1).
   b. Add GENUINE HARLEY-DAVIDSON EXTENDED LIFE ANTIFREEZE AND COOLANT until fluid level reaches COLD FILL line.
   c. Install overflow cap.

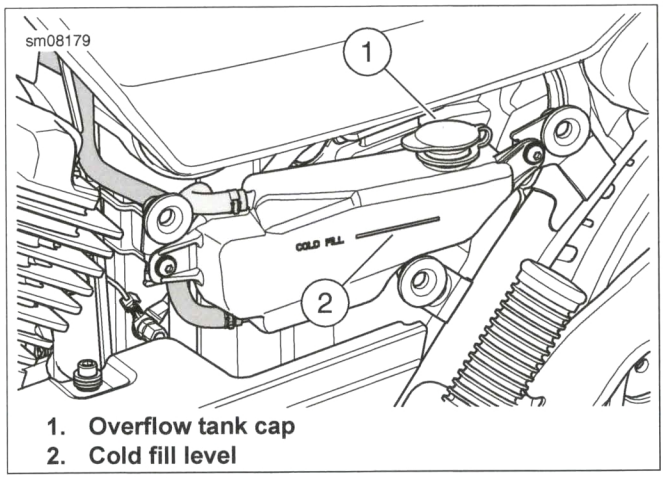

1. **Overflow tank cap**
2. **Cold fill level**

Figure 7-4. Coolant Overflow Tank

DRAIN AND FILL COOLING SYSTEM

FASTENER	TORQUE VALUE	
Coolant drain screw	10.0-12.0 Nm	89-106 **in-lbs**

Drain Cooling System

⚠WARNING

Do not loosen or remove pressure cap when engine is hot. The cooling system is under pressure and hot coolant and steam can escape from pressure cap, which could cause severe burns. Allow engine to cool before servicing the cooling system. (00091b)

1. See Figure 7-5. Remove pressure cap.
   a. Place a cloth over pressure cap (1).
   b. Hold down on locking tab (3). Turn cap one-quarter turn counterclockwise to safety stop.
   c. Allow pressure to escape.
   d. Press down and turn cap to pass over safety stops.
   e. Remove cap from filler neck (2).
2. See Figure 7-6. Remove coolant drain screw.
3. Drain and discard used coolant.

Fill Cooling System

1. See Figure 7-6. Install coolant drain screw. Tighten to 10.0-12.0 Nm (89-106 **in-lbs**).
2. See Figure 7-5. Fill cooling system.
   a. Add GENUINE HARLEY-DAVIDSON EXTENDED LIFE ANTIFREEZE AND COOLANT until fluid reaches lower sealing surface of the filler neck (2).
   b. Install pressure cap (1). Verify locking tab (3) inserts into cap (2) as shown.
3. Run motorcycle.
4. See Figure 7-4. Check coolant level in coolant overflow tank.
   a. Allow motorcycle to cool.
   b. Set motorcycle upright.
   c. Check coolant level in coolant overflow tank.
5. If level is below "COLD FILL" line, add coolant.
   a. Remove overflow cap (1).
   b. Add GENUINE HARLEY-DAVIDSON EXTENDED LIFE ANTIFREEZE AND COOLANT until fluid level reaches "COLD FILL" line.
   c. Install overflow cap.
6. Repeat as necessary.

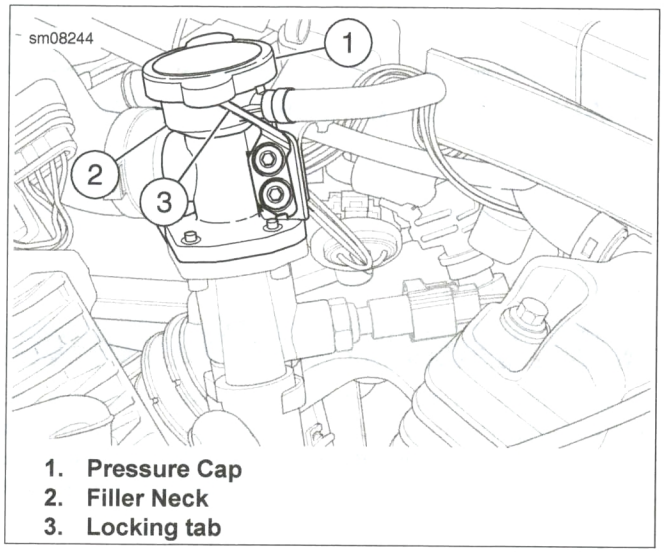

1. Pressure Cap
2. Filler Neck
3. Locking tab

Figure 7-5. Pressure Cap

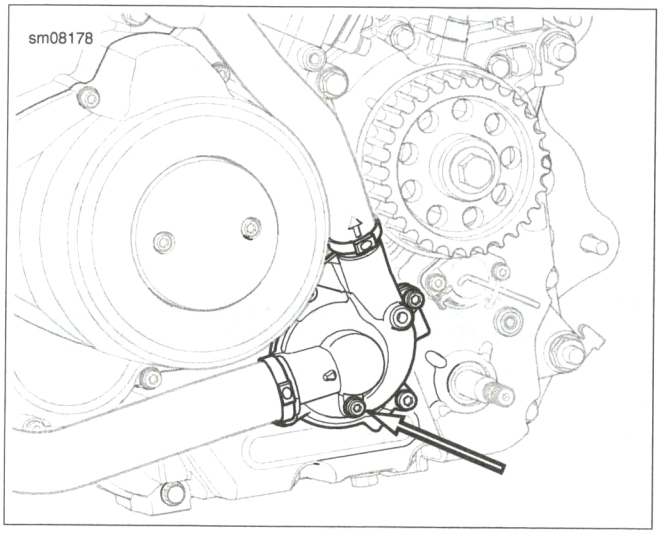

Figure 7-6. Coolant Drain Screw

COMPLETE

1. Install left side cover. See 3.17 SIDE COVERS.
2. Secure rear of fuel tank. See 6.4 LIFT REAR OF FUEL TANK.

PREPARE

1. Drain coolant to below thermostat housing level. See 7.5 COOLANT.
2. Lift rear of fuel tank. See 6.4 LIFT REAR OF FUEL TANK.
3. Remove engine coolant temperature sensor. See 7.10 ENGINE COOLANT TEMPERATURE (ECT) SENSOR.

REMOVE

NOTES

- *Replace thermostat and housing as an assembly.*
- *See Figure 7-7. Pry overlap of clamps (4) to remove. If clamps must be cut, use a sharp high-quality wire cutter.*

1. Remove thermostat housing.
   a. Remove clamps (4). Detach hoses from thermostat housing.
   b. Remove screws and washers (1, 2).
   c. Remove thermostat housing (3).

INSTALL

PART NUMBER	TOOL NAME
HD-41137	HOSE CLAMP PLIERS

FASTENER	TORQUE VALUE	
Coolant thermostat housing screws	9.0-11.0 Nm	80-97 **in-lbs**

1. See Figure 7-7. Install thermostat housing.
   a. Install thermostat housing (3).
   b. Install screws and washers (1, 2). Tighten to 9.0-11.0 Nm (80-97 **in-lbs**).
   c. Install hoses on thermostat housing. Install clamps with HOSE CLAMP PLIERS (Part No. HD-41137).

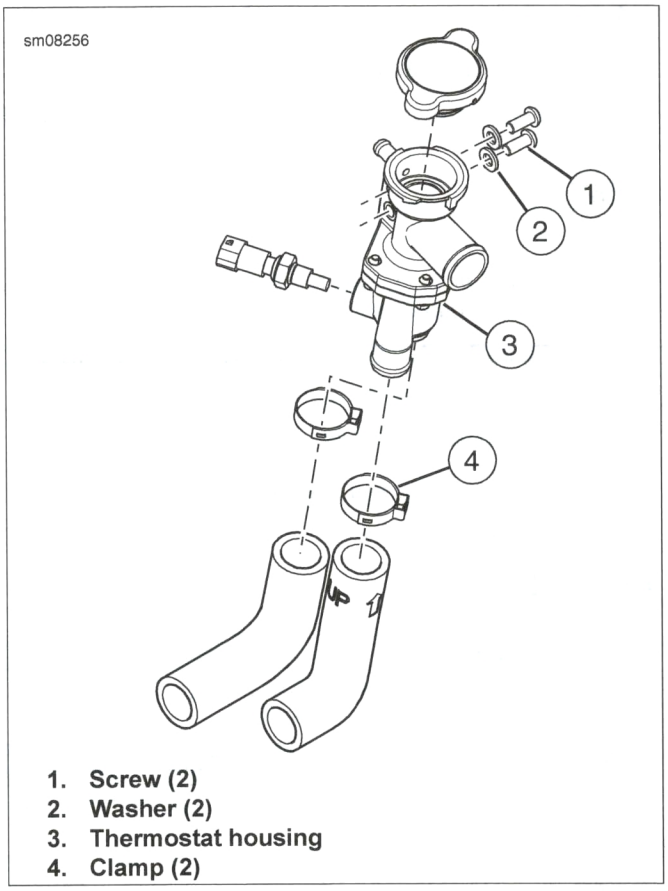

1. **Screw (2)**
2. **Washer (2)**
3. **Thermostat housing**
4. **Clamp (2)**

Figure 7-7. Thermostat Housing

COMPLETE

1. Install engine coolant temperature sensor. See 7.10 ENGINE COOLANT TEMPERATURE (ECT) SENSOR.
2. Fill system with coolant. See 7.5 COOLANT.
3. Secure rear of fuel tank. See 6.4 LIFT REAR OF FUEL TANK.

PREPARE

1. Drain cooling system. See 7.5 COOLANT.
2. Remove left foot control bracket. See 3.34 RIDER FOOT CONTROLS.

REMOVE

NOTE

Pry overlap of clamps (1, 2) to remove. If clamps must be cut, use a sharp high-quality wire cutter.

1. See Figure 7-8. Detach coolant hoses from coolant pump.
   a. Discard clamps (1, 2).
   b. Detach coolant hoses.
2. Remove screws (3) and cover (4).
3. Remove coolant pump.

INSTALL

PART NUMBER	TOOL NAME
HD-41137	HOSE CLAMP PLIERS

FASTENER	TORQUE VALUE	
Coolant pump and cover screws	10.0-12.0 Nm	89-106 **in-lbs**

1. See Figure 7-9. Install coolant pump.
   a. Install **new** O-ring (1).
   b. Align shaft with oil pump shaft (2).
2. See Figure 7-10. Install cover.
   a. Install **new** seal between cover and coolant pump.
   b. Tighten screws using pattern shown to 10.0-12.0 Nm (89-106 **in-lbs**).
3. See Figure 7-8. Attach coolant hoses to pump. Install **new** hose clamps (1, 2) using HOSE CLAMP PLIERS (Part No. HD-41137).

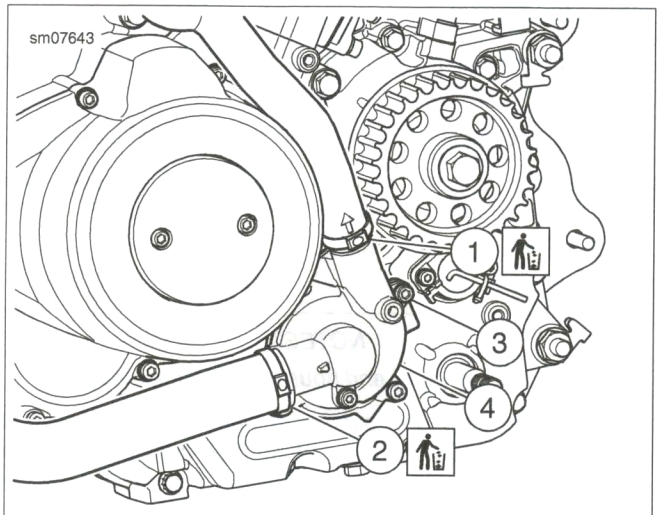

1. **Coolant hose**
2. **Coolant hose**
3. **Screws (4)**
4. **Cover**

Figure 7-8. Coolant Pump and Hoses

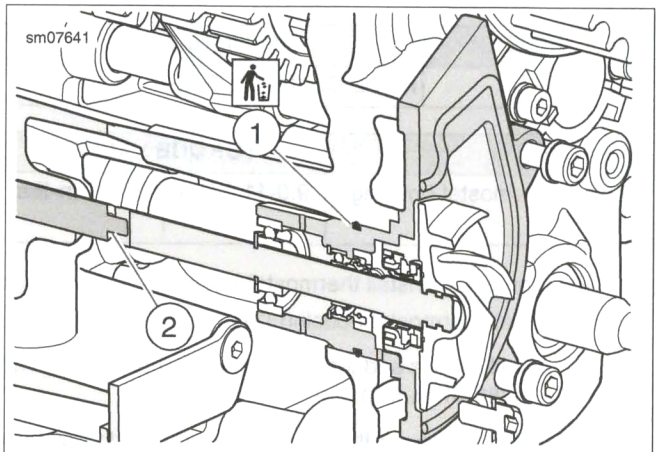

1. **O-ring**
2. **Oil pump shaft**

Figure 7-9. Coolant Pump Shaft Alignment

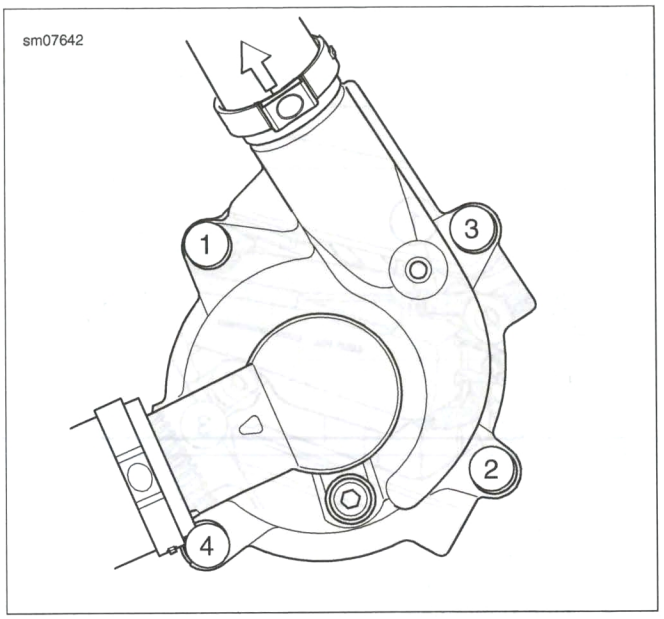

Figure 7-10. Coolant Pump Cover Tightening Sequence

COMPLETION

1. Fill cooling system. See 7.5 COOLANT.
2. Install left foot control bracket. See 3.34 RIDER FOOT CONTROLS.

PREPARE

1. Remove left side cover. See 3.17 SIDE COVERS.
2. Drain coolant overflow tank. See 7.5 COOLANT.

REMOVE

1. See Figure 7-11. Remove overflow tank.
   a. Detach vent hose (1).
   b. Detach overflow hose (4).
   c. Remove screws (2).
   d. Remove overflow tank (3).

INSTALL

FASTENER	TORQUE VALUE	
Coolant overflow tank screws	2.3-3.3 Nm	21-29 **in-lbs**

1. See Figure 7-11. Install overflow tank.
   a. Install overflow tank (3).
   b. Install screws (2). Tighten to 2.3-3.3 Nm (21-29 **in-lbs**).
   c. Attach overflow hose (4).
   d. Attach vent hose (1).

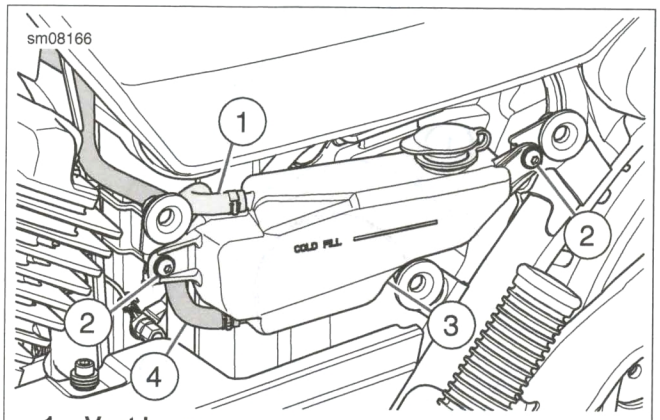

1. **Vent hose**
2. **Screw (2)**
3. **Overflow tank**
4. **Overflow hose**

Figure 7-11. Overflow Tank

COMPLETE

1. Fill coolant overflow tank. See 7.5 COOLANT.
2. Install left side cover. See 3.17 SIDE COVERS.

PREPARE

1. Remove left side cover. See 3.17 SIDE COVERS.
2. Drain coolant system. 7.5 COOLANT.
3. Lift rear of fuel tank. See 6.4 LIFT REAR OF FUEL TANK.

REMOVE

NOTES

- *Crimp-type clamps are not reusable. Pry overlap of crimp type clamps to remove. If clamps must be cut, use a sharp high-quality wire cutter.*
- *Spring-type clamps are reusable.*

1. See Figure 7-12. Remove hose.
   a. Remove clamps.
   b. Remove hose.

INSPECT

1. Inspect hoses for wear or leakage. Replace as necessary.
2. Verify that all clamps are tight. Tighten or replace as necessary.

INSTALL

PART NUMBER	TOOL NAME
HD-41137	HOSE CLAMP PLIERS

1. See Figure 7-12. Install coolant hose.
   a. Install hose.
   b. Install clamps. For crimp-type clamps, use HOSE CLAMP PLIERS (Part No. HD-41137).

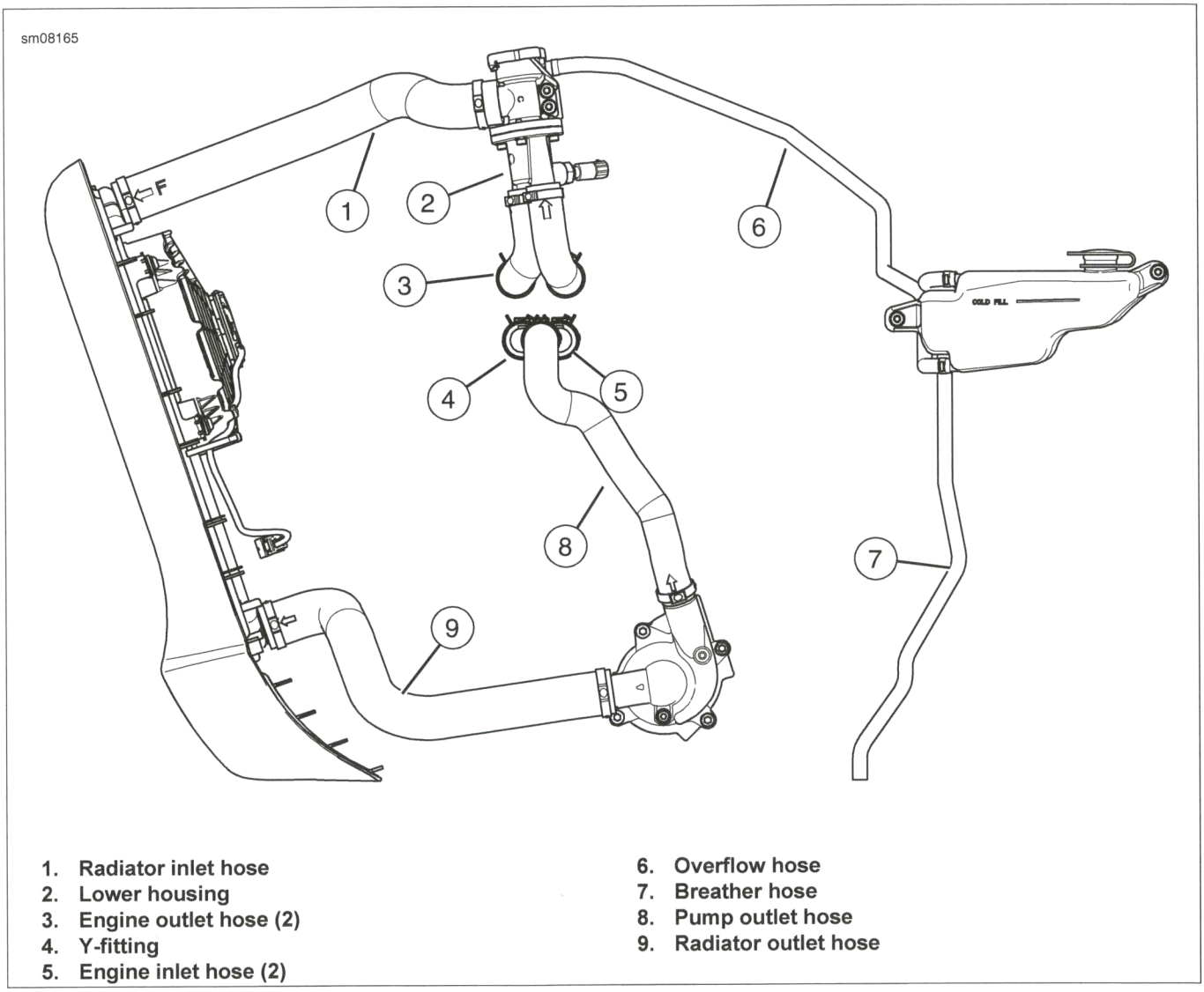

1. **Radiator inlet hose**
2. **Lower housing**
3. **Engine outlet hose (2)**
4. **Y-fitting**
5. **Engine inlet hose (2)**
6. **Overflow hose**
7. **Breather hose**
8. **Pump outlet hose**
9. **Radiator outlet hose**

Figure 7-12. Coolant System

COMPLETE

1. Secure rear of fuel tank. See 6.4 LIFT REAR OF FUEL TANK.
2. Fill system with coolant. 7.5 COOLANT.
3. Install left side cover. See 3.17 SIDE COVERS.

ENGINE COOLANT TEMPERATURE (ECT) SENSOR 7.10

PREPARE

1. Remove main fuse. See 8.4 POWER DISCONNECT.
2. Lift rear of fuel tank. See 6.4 LIFT REAR OF FUEL TANK.
3. Drain coolant. See 7.5 COOLANT.

REMOVE

1. See Figure 7-13. Disconnect ECT connector (1).
2. Remove sensor (2).

INSTALL

FASTENER	TORQUE VALUE	
Engine coolant temperature sensor (ECT)	15.0 Nm	133 **in-lbs**

1. See Figure 7-13. Install coolant temperature sensor (2). Tighten to 15.0 Nm (133 **in-lbs**).
2. Connect ECT connector (1).

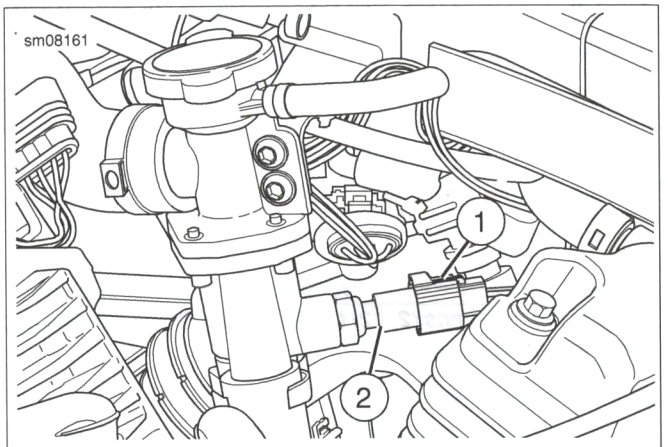

1. ECT sensor connector
2. ECT sensor

Figure 7-13. Engine Coolant Temperature (ECT) Sensor

COMPLETE

1. Fill system with coolant. See 7.5 COOLANT.
2. Secure rear of fuel tank. See 6.4 LIFT REAR OF FUEL TANK.
3. Install main fuse. See 8.4 POWER DISCONNECT.

PREPARE

1. Lift rear of fuel tank. See 6.4 LIFT REAR OF FUEL TANK.
2. Drain coolant. See 7.5 COOLANT.

REMOVE

1. See Figure 7-14. Remove shroud.
   a. Remove screws (8) and washers (9).
   b. Remove shroud (7).

NOTE

Pry overlap of clamps (2, 12) to remove. If clamps must be cut, use a sharp high-quality wire cutter.

2. Remove radiator.
   a. Remove screws (6).
   b. Remove bracket (5).
   c. Remove upper isolators (4).
   d. Detach upper hose (1) from radiator. Discard clamp (2).
   e. Detach lower hose (13) from radiator. Discard clamp (12).
   f. Remove radiator (3).
3. Remove cooling fan. See 8.25 COOLING FAN.
4. If necessary, remove lower isolators (11) and bracket (10).

INSTALL

PART NUMBER	TOOL NAME
HD-41137	HOSE CLAMP PLIERS

FASTENER	TORQUE VALUE	
Radiator screws	9.0-11.0 Nm	80-97 **in-lbs**
Radiator shroud screws	9.0-11.0 Nm	80-97 **in-lbs**

1. See Figure 7-7. Install bracket (10) and lower isolators (11) on frame.
2. Install cooling fan. See 8.25 COOLING FAN.

NOTE

Use HOSE CLAMP PLIERS (Part No. HD-41137) to secure clamps (2, 12).

3. Install radiator.
   a. Attach lower hose (13) to radiator. Install **new** clamp (12).
   b. Attach upper hose (1) to radiator. Install **new** clamp (2).
   c. Install upper isolators (4).
   d. Install lower end of radiator (3) on lower isolators (11).
   e. Install bracket (5).
   f. Install screws (6). Tighten to 9.0-11.0 Nm (80-97 **in-lbs**).
4. Install shroud.
   a. Install shroud (7).
   b. Install washers (9) and screws (8). Tighten to 9.0-11.0 Nm (80-97 **in-lbs**).

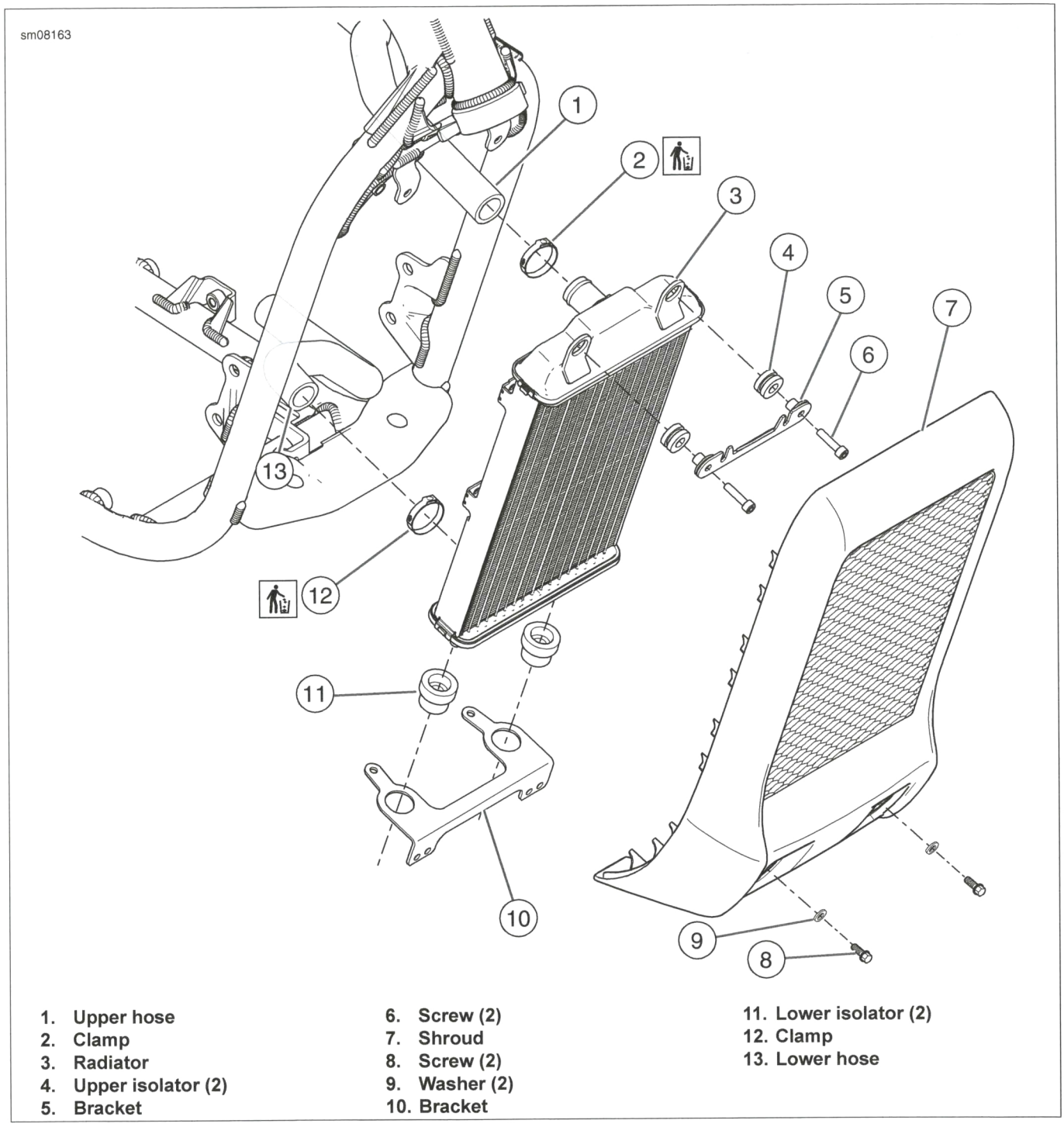

1. Upper hose
2. Clamp
3. Radiator
4. Upper isolator (2)
5. Bracket
6. Screw (2)
7. Shroud
8. Screw (2)
9. Washer (2)
10. Bracket
11. Lower isolator (2)
12. Clamp
13. Lower hose

Figure 7-14. Radiator

COMPLETE

1. Fill system with coolant. See 7.5 COOLANT.
2. Secure rear of fuel tank. See 6.4 LIFT REAR OF FUEL TANK.

NOTES

SUBJECT	PAGE NO.
8.1 FASTENER TORQUE VALUES	8-1
8.2 SPECIFICATIONS	8-3
8.3 FUSES AND RELAYS	8-4
8.4 POWER DISCONNECT	8-6
8.5 STARTER	8-7
8.6 STARTER SOLENOID	8-8
8.7 ALTERNATOR	8-9
8.8 VOLTAGE REGULATOR	8-10
8.9 IGNITION SWITCH	8-11
8.10 IGNITION COIL	8-12
8.11 SPARK PLUG CABLE	8-13
8.12 LEFT HANDLEBAR SWITCH HOUSING	8-14
8.13 RIGHT HANDLEBAR SWITCH HOUSING	8-15
8.14 SPEEDOMETER	8-16
8.15 OIL PRESSURE SWITCH	8-17
8.16 NEUTRAL INDICATOR SWITCH	8-18
8.17 HORN	8-19
8.18 HEADLAMP	8-20
8.19 FRONT TURN SIGNAL LAMPS	8-23
8.20 REAR TURN SIGNAL LAMPS	8-24
8.21 TURN SIGNAL FLASHER	8-26
8.22 TAIL LAMP	8-27
8.23 LICENSE PLATE LAMP	8-28
8.24 ELECTRONIC CONTROL MODULE (ECM)	8-29
8.25 COOLING FAN	8-30
8.26 VEHICLE SPEED SENSOR (VSS)	8-31
8.27 BANK ANGLE SENSOR	8-32
8.28 JIFFY STAND SENSOR	8-33
8.29 BATTERY TRAY	8-34
8.30 ENGINE GROUND CABLE	8-35
8.31 ENGINE WIRE HARNESS	8-36
8.32 MAIN WIRING HARNESS	8-38

NOTES

FASTENER TORQUE VALUES IN THIS CHAPTER

The table below lists torque values for all fasteners presented in this chapter.

FASTENER	TORQUE VALUE		NOTES
Alternator rotor bolt	160.0-170.0 Nm	118-125 ft-lbs	8.7 ALTERNATOR, Install
Battery ground stud	6.0-10.0 Nm	54-88 **in-lbs**	8.4 POWER DISCONNECT, Connect Power
Battery tray cover screws	2.3-3.3 Nm	21-29 **in-lbs**	8.29 BATTERY TRAY, Install
Battery tray screws	2.3-3.3 Nm	21-29 **in-lbs**	8.29 BATTERY TRAY, Install
Cooling fan screws	2.3-3.3 Nm	21-29 **in-lbs**	8.25 COOLING FAN, Install
ECM screws	2.3-3.3 Nm	21-29 **in-lbs**	8.24 ELECTRONIC CONTROL MODULE (ECM), Install
Engine ground cable nut	6.0-10.0 Nm	54-88 **in-lbs**	8.30 ENGINE GROUND CABLE, Install
Engine ground cable screw	9.0-11.0 Nm	80-97 **in-lbs**	8.30 ENGINE GROUND CABLE, Install
Handlebar switch housing screws, left	0.8-1.1 Nm	7-9 **in-lbs**	8.12 LEFT HANDLEBAR SWITCH HOUSING, Install
Headlamp horizontal adjustment locknut	34.2-41.8 Nm	26-30 ft-lbs	8.18 HEADLAMP, Install
Headlamp horizontal adjustment locknut	34.2-41.8 Nm	26-30 ft-lbs	8.18 HEADLAMP, Adjust
Headlamp vertical adjustment locknut	20.6-25.5 Nm	16-18 ft-lbs	8.18 HEADLAMP, Install
Headlamp vertical adjustment locknut	20.6-25.5 Nm	16-18 ft-lbs	8.18 HEADLAMP, Adjust
Horn bracket screws	42.7-47.3 Nm	32-34 ft-lbs	8.17 HORN, Install
Horn screws	4.5-5.5 Nm	40-48 **in-lbs**	8.17 HORN, Install
Ignition coil inner bracket screws	22.5-27.5 Nm	17-20 ft-lbs	8.10 IGNITION COIL, Install
Ignition coil screws	9.0-11.0 Nm	80-97 **in-lbs**	8.10 IGNITION COIL, Install
Ignition switch screws	6.2-6.8 Nm	55-60 **in-lbs**	8.9 IGNITION SWITCH, Install
Jiffy stand sensor bracket screw	22.0-29.0 Nm	17-21 ft-lbs	8.28 JIFFY STAND SENSOR, Install
Jiffy stand sensor screw	9.0-11.0 Nm	80-97 **in-lbs**	8.28 JIFFY STAND SENSOR, Install
License plate lamp screws	0.8-1.2 Nm	7-11 **in-lbs**	8.23 LICENSE PLATE LAMP, Install
Mud guard screws	2.3-3.3 Nm	21-29 **in-lbs**	8.24 ELECTRONIC CONTROL MODULE (ECM), Install
Neutral switch screws	5.0-7.0 Nm	45-62 **in-lbs**	8.16 NEUTRAL INDICATOR SWITCH, Install
Oil pressure switch	10.0-12.0 Nm	89-106 **in-lbs**	8.15 OIL PRESSURE SWITCH, Install
Rear lighting harness retainer screw	1.2-2.0 Nm	11-17 **in-lbs**	8.20 REAR TURN SIGNAL LAMPS, Install
Rear lighting harness retainer screw	1.2-2.0 Nm	11-17 **in-lbs**	8.23 LICENSE PLATE LAMP, Install
Speedometer screws	10.8-13.2 Nm	96-116 **in-lbs**	8.14 SPEEDOMETER, Install
Starter relay screws	2.3-3.3 Nm	21-29 **in-lbs**	8.6 STARTER SOLENOID, Install
Starter relay terminal locknuts	6.0-10.0 Nm	54-88 **in-lbs**	8.6 STARTER SOLENOID, Install
Starter screws	10.0-12.0 Nm	89-106 **in-lbs**	8.5 STARTER, Install
Starter terminal nut	6.0-10.0 Nm	54-88 **in-lbs**	8.5 STARTER, Install
Tail lamp screws	3.9-5.9 Nm	35-52 **in-lbs**	8.22 TAIL LAMP, Install
Turn signal housing screw, rear	3.9-5.9 Nm	35-52 **in-lbs**	8.20 REAR TURN SIGNAL LAMPS, Install
Turn signal housing screws, front	9.0-11.0 Nm	80-97 **in-lbs**	8.19 FRONT TURN SIGNAL LAMPS, Install
Turn signal lens screw	0.6-0.8 Nm	5-7 **in-lbs**	8.19 FRONT TURN SIGNAL LAMPS, Install
Turn signal lens screw	0.6-0.8 Nm	5-7 **in-lbs**	8.20 REAR TURN SIGNAL LAMPS, Install
Voltage regulator bracket screws	22.5-27.5 Nm	17-20 ft-lbs	8.8 VOLTAGE REGULATOR, Install

FASTENER	TORQUE VALUE		NOTES
Voltage regulator screws	9.0-11.0 Nm	80-97 **in-lbs**	8.8 VOLTAGE REGULATOR, Install
VSS screw	7.0-9.0 Nm	62-79 **in-lbs**	8.26 VEHICLE SPEED SENSOR (VSS), Install

SPECIFICATIONS

Table 8-1. Battery Specifications

BATTERY	SPECIFICATIONS
Size	12V/12 AH/225CCA
Type	Sealed, AGM

Table 8-2. Spark Plug Specifications

SPARK PLUG	SPECIFICATIONS	
Gap	0.8-0.9 mm	0.031-0.035 in
Torque	10-12 Nm	89-106 **in-lbs**
Type	RG6HCC	

Table 8-3. Spark Plug Cable Specifications

SPECIFICATION	FRONT	REAR
Length (in)	12.2	18.5
Length (mm)	312	470
Resistance (ohms)	3050-8140	4625-12340

Table 8-4. Starter Specifications

STARTER	SPECIFICATIONS
Cranking current	160A
Free speed	8800 rpm (MIN)
Free current	27A

Table 8-5. Alternator Specifications

ALTERNATOR	VALUE
AC voltage output	16-20 VAC per 1000 rpm
Stator coil resistance	0.1-0.3 ohm
Three phase	35 amp system

Table 8-6. Regulator Specifications

REGULATOR	VALUE
Amperes @ 3600 rpm	30-35A
Voltage @ 3600 rpm	14.4-14.6V @ 24 °C (75 °F)
Overheat protection	Approximately 105 °C (221 °F)

Table 8-7. Fuse Specifications

ITEM	RATING (AMPERES)
Battery	5
Fuel pump	10
Fan	15
ACC	5
Lights	10
Lights/instruments	10
Ignition	15

Table 8-8. Ignition Coil Specifications

WINDING	RESISTANCE
Ignition coil primary resistance at room temperature	0.3-0.7 ohms
Ignition coil secondary resistance at room temperature	1500-2400 ohms

Table 8-9. Temperature Specifications

RANGE	VALUE
Fans off at	105 °C (221 °F) and lower
Fans on at	110 °C (230 °F) and higher
Normal operating	66-110 °C (150-230 °F)
Over-temperature threshold	117 °C (243 °F)

PREPARE

1. Remove right side cover. See 3.17 SIDE COVERS.

REMOVE

Fuses

1. See Figure 8-1. Remove main fuse (6).
2. See Figure 8-2. Remove fuses (5 through 13) as needed. Refer to Table 8-10.

Table 8-10. Fuse Ratings

NUMBER	FUSE	RATING
5	Battery	5 Amp
6	Open	-
7	Open	-
8	Fuel pump	10 Amp
9	Lights	10 Amp
10	Lights/instruments	10 Amp
11	Ignition	15 Amp
12	Fan	15 Amp
13	Accessory	5 Amp

Relays

1. See Figure 8-1. Remove main fuse (6).
2. See Figure 8-2. Remove relays (1 through 4) as needed.

Diode Pack

1. See Figure 8-1. Remove main fuse (6).
2. Remove diode pack (1).

INSTALL

Fuses

1. See Figure 8-2. Install fuses (5 through 13) as needed. Refer to Table 8-10.
2. See Figure 8-1. Install main fuse (6).

Relays

1. See Figure 8-2. Install relays (1 through 4) as needed.
2. See Figure 8-1. Install main fuse (6).

Diode Pack

1. See Figure 8-1. Install diode pack (1).
2. Install main fuse (6).

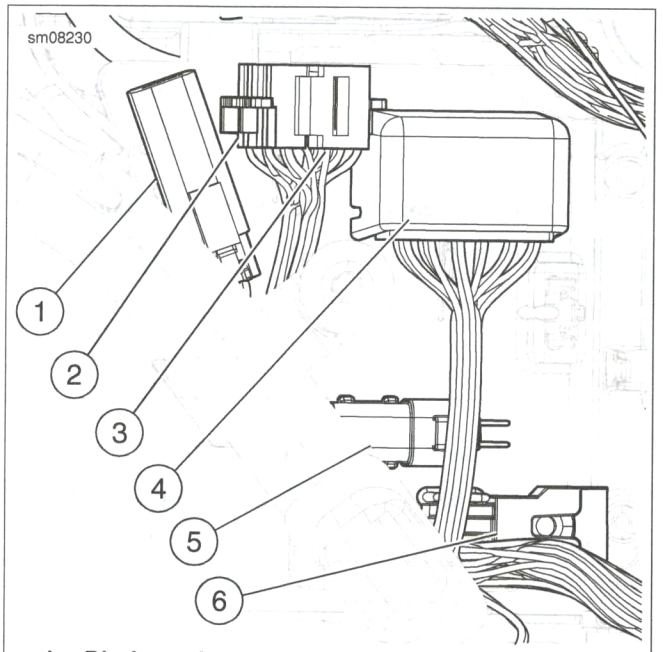

1. **Diode pack**
2. **Relay block 2**
3. **Relay block 1**
4. **Fuse block**
5. **Data link connector (DLC)**
6. **Main fuse**

Figure 8-1. Electrical Panel

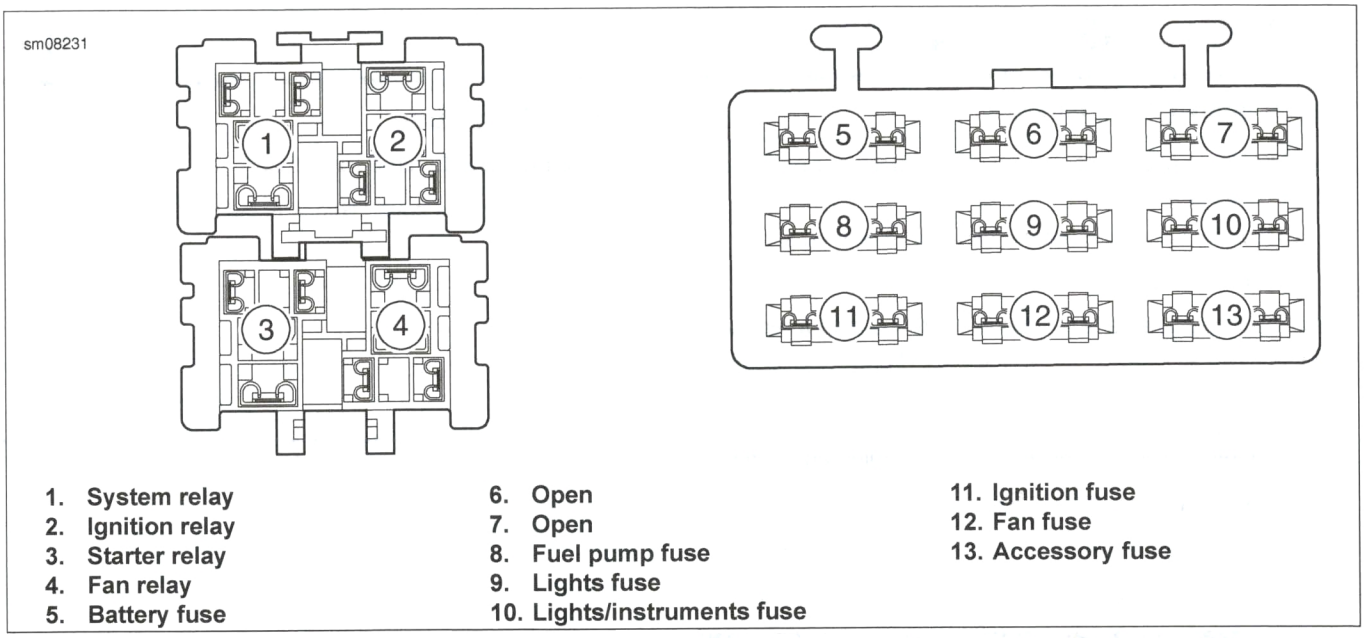

1. System relay
2. Ignition relay
3. Starter relay
4. Fan relay
5. Battery fuse
6. Open
7. Open
8. Fuel pump fuse
9. Lights fuse
10. Lights/instruments fuse
11. Ignition fuse
12. Fan fuse
13. Accessory fuse

Figure 8-2. Fuses and Relays

COMPLETE

1. Install right side cover. See 3.17 SIDE COVERS.

⚠WARNING

Be sure that all lights and switches operate properly before operating motorcycle. Low visibility of rider can result in death or serious injury. (00316a)

2. Test affected circuit for proper operation.

DISCONNECT POWER

Two different methods of disconnecting electrical power are used in this manual.

- Disconnect negative battery cable from ground stud.
- Remove main fuse.

Disconnect negative battery cable from ground stud when there is a possibility of injury caused by starter engagement (engine rotation).

Remove main fuse when there is a possibility of injury, caused by accidental vehicle start-up, or electrical equipment damage.

Disconnect Negative Battery Cable

1. Remove left side cover. See 3.17 SIDE COVERS.
2. Remove front belt guard. See 3.21 BELT GUARDS.

⚠WARNING

To prevent accidental vehicle start-up, which could cause death or serious injury, disconnect negative (-) battery cable before proceeding. (00048a)

3. See Figure 8-3. Remove negative battery ground cable (1) from ground stud (2).

Remove Main Fuse

1. Remove right side cover. See 3.17 SIDE COVERS.

⚠WARNING

To prevent accidental vehicle start-up, which could cause death or serious injury, remove main fuse before proceeding. (00251b)

2. See Figure 8-4. Remove main fuse.

CONNECT POWER

FASTENER	TORQUE VALUE	
Battery ground stud	6.0-10.0 Nm	54-88 **in-lbs**

Connect Negative Battery Cable

1. See Figure 8-3. Install negative battery ground cable (1) to ground stud (2). Tighten to 6.0-10.0 Nm (54-88 **in-lbs**).
2. Install front belt guard. See 3.21 BELT GUARDS.
3. Install left side cover. See 3.17 SIDE COVERS.

Install Main Fuse

1. See Figure 8-4. Install main fuse.
2. Install right side cover. See 3.17 SIDE COVERS.

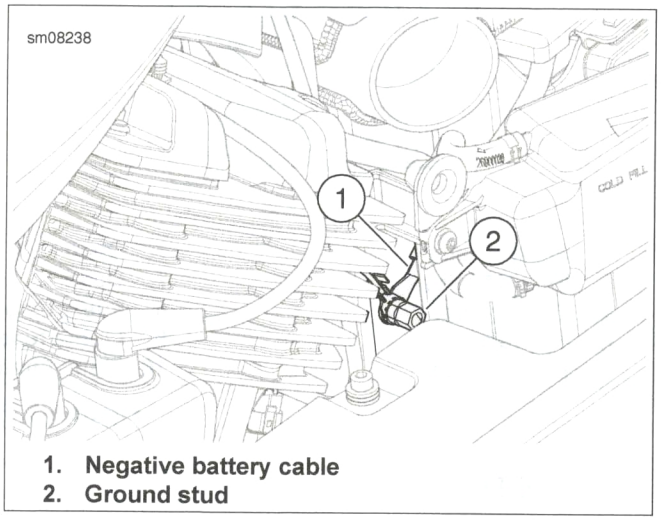

1. **Negative battery cable**
2. **Ground stud**

Figure 8-3. Battery Ground Cable

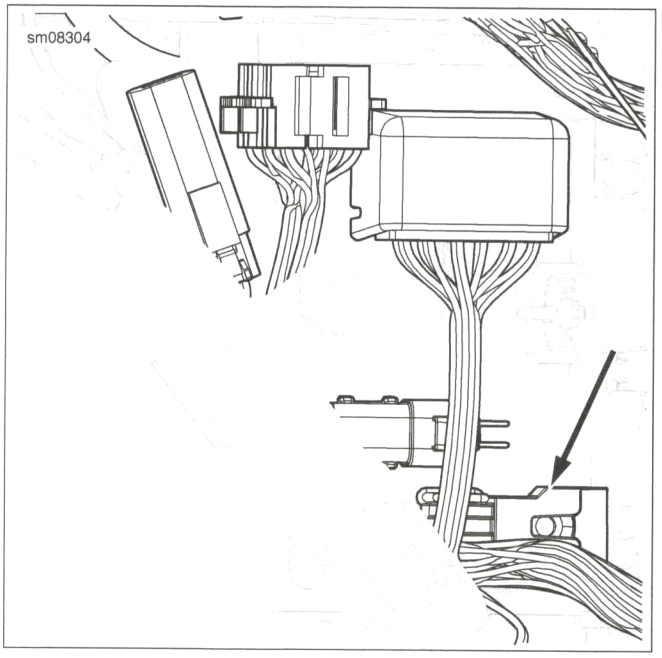

Figure 8-4. Main Fuse

PREPARE

1. Disconnect negative battery cable. See 8.4 POWER DISCONNECT.
2. Remove exhaust system. See 6.18 EXHAUST SYSTEM.

REMOVE

1. See Figure 8-5. Remove starter cable.
   a. Remove cover (3).
   b. Remove locknut (5).
   c. Remove starter cable (4).
2. Remove starter.
   a. Remove screws (6).
   b. Remove starter (1).
   c. Discard O-ring (2).

INSTALL

FASTENER	TORQUE VALUE	
Starter screws	10.0-12.0 Nm	89-106 **in-lbs**
Starter terminal nut	6.0-10.0 Nm	54-88 **in-lbs**

1. See Figure 8-5. Install starter.
   a. Lubricate **new** O-ring (2) with SPECIAL PURPOSE GREASE.
   b. Install **new** O-ring (2).
   c. Install starter (1).
   d. Install screws (6). Tighten to 10.0-12.0 Nm (89-106 **in-lbs**).
2. Install starter cable.
   a. Install starter cable (4). Position starter cable angled down as shown.
   b. Install locknut (5). Tighten to 6.0-10.0 Nm (54-88 **in-lbs**).
   c. Install cover (3).

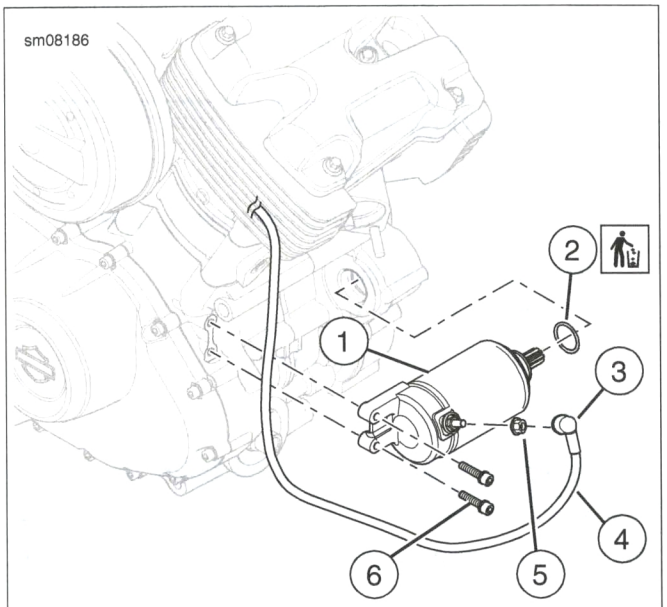

1. **Starter**
2. **O-ring**
3. **Cover**
4. **Starter cable**
5. **Locknut**
6. **Screw (2)**

Figure 8-5. Starter

COMPLETE

1. Install exhaust system. See 6.18 EXHAUST SYSTEM.
2. Connect negative battery cable. See 8.4 POWER DISCONNECT.

PREPARE

1. Remove seat. See 3.36 SEAT.
2. Disconnect negative battery cable. See 8.4 POWER DISCONNECT.

REMOVE

1. See Figure 8-6. Disconnect starter solenoid connector (5).
2. Remove battery and starter cables.
   a. Remove cover (1).
   b. Remove locknuts (2).
   c. Remove washers (8).
   d. Remove starter cable (3) and battery cable (7).
3. Remove starter solenoid.
   a. Remove screws (4).
   b. Remove starter solenoid (6).

INSTALL

FASTENER	TORQUE VALUE	
Starter relay screws	2.3-3.3 Nm	21-29 **in-lbs**
Starter relay terminal locknuts	6.0-10.0 Nm	54-88 **in-lbs**

1. See Figure 8-6. Install starter solenoid.
   a. Install starter solenoid (6).
   b. Install screws (4). Tighten to 2.3-3.3 Nm (21-29 **in-lbs**).
2. Install battery and starter cables.
   a. Install starter cable (3) and battery cable (7).
   b. Install washers (8).
   c. Install locknuts (2). Tighten to 6.0-10.0 Nm (54-88 **in-lbs**).
   d. Install cover (1).
3. Connect starter solenoid connector (5).

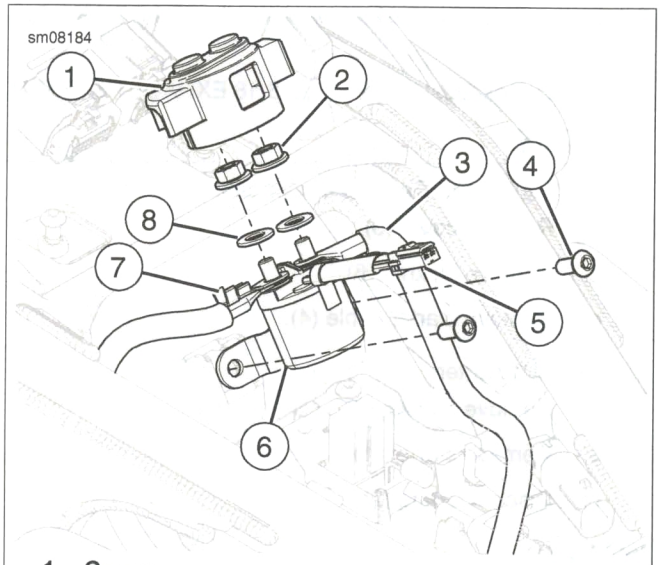

1. **Cover**
2. **Locknut (2)**
3. **Starter cable**
4. **Screw (2)**
5. **Starter solenoid connector**
6. **Starter solenoid**
7. **Battery cable**
8. **Washer (2)**

Figure 8-6. Starter Solenoid

COMPLETE

1. Install seat. See 3.36 SEAT.
2. Connect negative battery cable. See 8.4 POWER DISCONNECT.

PREPARE

1. Disconnect negative battery cable. See 8.4 POWER DISCONNECT.
2. Remove left side rider foot control assembly. See 3.34 RIDER FOOT CONTROLS.
3. Remove alternator cover. See 4.21 ALTERNATOR COVER.

REMOVE

PART NUMBER	TOOL NAME
HD-51463	ALTERNATOR ROTOR PULLER
HD-51501	ALTERNATOR LOCKING TOOL

NOTE

See 4.21 ALTERNATOR COVER for stator removal.

1. See Figure 8-7. Remove rotor.
   a. Install ALTERNATOR LOCKING TOOL (Part No. HD-51501).
   b. Remove bolt (4).
   c. Remove rotor (3) using ALTERNATOR ROTOR PULLER (Part No. HD-51463).
   d. Remove key (1).
2. Remove starter ring gear.
   a. Remove starter ring gear (2).
   b. Remove bearing (5).

INSTALL

PART NUMBER	TOOL NAME
HD-51501	ALTERNATOR LOCKING TOOL

FASTENER	TORQUE VALUE	
Alternator rotor bolt	160.0-170.0 Nm	118-125 ft-lbs

NOTE

See 4.21 ALTERNATOR COVER for stator installation.

1. See Figure 8-7. Install starter ring gear.
   a. Install bearing (5).
   b. Install starter ring gear (2).
2. Install rotor.
   a. Install key (1).
   b. Install rotor (3).
   c. Install ALTERNATOR LOCKING TOOL (Part No. HD-51501).
   d. Install bolt (4). Tighten to 160.0-170.0 Nm (118-125 ft-lbs).
   e. Remove ALTERNATOR LOCKING TOOL (Part No. HD-51501).

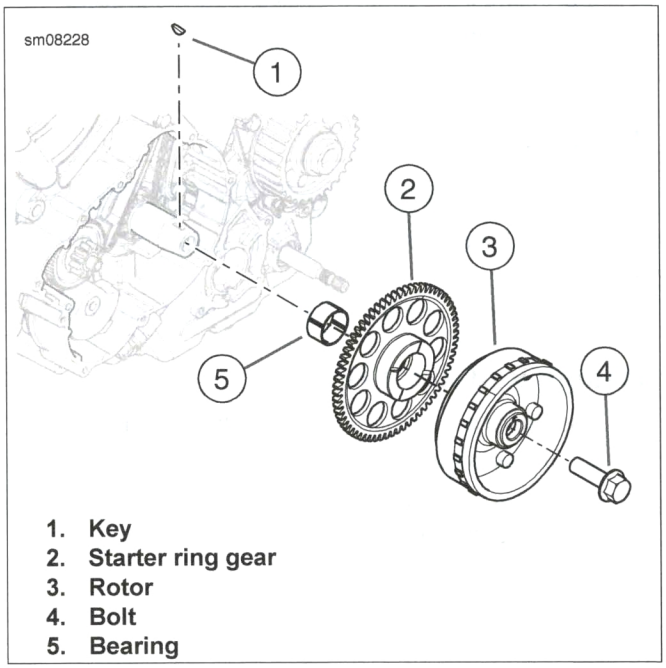

1. **Key**
2. **Starter ring gear**
3. **Rotor**
4. **Bolt**
5. **Bearing**

Figure 8-7. Alternator Rotor

COMPLETE

1. Install alternator cover. See 4.21 ALTERNATOR COVER.
2. Install left side rider foot control assembly. See 3.34 RIDER FOOT CONTROLS.
3. Connect negative battery cable. See 8.4 POWER DISCONNECT.

PREPARE

1. Remove main fuse. See 8.4 POWER DISCONNECT.
2. Remove radiator shroud. See 7.11 RADIATOR.

REMOVE

Voltage Regulator

1. See Figure 8-8. Remove voltage regulator.
   a. Disconnect voltage regulator connectors (5, 6).
   b. Remove voltage regulator screws (1).
   c. Remove voltage regulator (2).

Voltage Regulator Bracket

1. See Figure 8-8. Remove voltage regulator bracket.
   a. Remove bracket screws (3).
   b. Remove bracket (4).

INSTALL

FASTENER	TORQUE VALUE	
Voltage regulator bracket screws	22.5-27.5 Nm	17-20 ft-lbs
Voltage regulator screws	9.0-11.0 Nm	80-97 **in-lbs**

Voltage Regulator Bracket

1. See Figure 8-8. Install voltage regulator bracket.
   a. Install bracket (4).
   b. Install bracket screws (3). Tighten to 22.5-27.5 Nm (17-20 ft-lbs).

Voltage Regulator

1. See Figure 8-8. Install voltage regulator.
   a. Install voltage regulator (2).
   b. Install voltage regulator screws (1). Tighten to 9.0-11.0 Nm (80-97 **in-lbs**).
   c. Connect stator and voltage regulator connectors (5, 6).

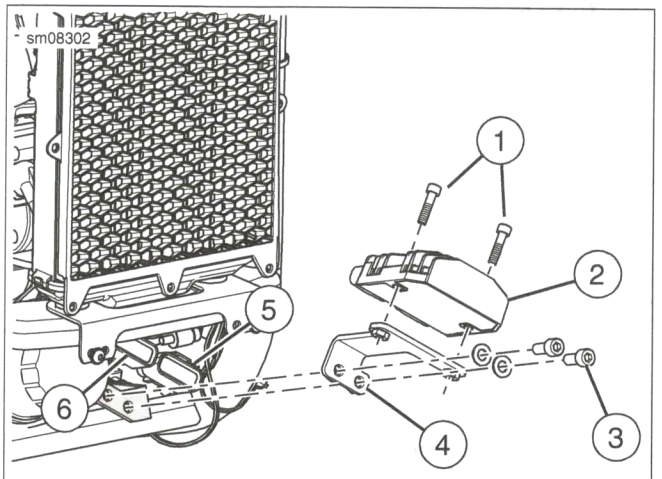

1. **Voltage regulator screw (2)**
2. **Voltage regulator**
3. **Bracket screw (2)**
4. **Bracket**
5. **Stator connector**
6. **Voltage regulator connector**

Figure 8-8. Voltage Regulator Assembly

COMPLETE

1. Install radiator shroud. See 7.11 RADIATOR.
2. Install main fuse. See 8.4 POWER DISCONNECT.

PREPARE

1. Remove main fuse. See 8.4 POWER DISCONNECT.
2. Remove headlamp fairing. See 3.25 HEADLAMP FAIRING.
3. Remove handlebar. See 3.27 HANDLEBAR.
4. Remove fuel tank. See 6.5 FUEL TANK.

REMOVE

1. See Figure 8-9. Disconnect ignition switch connector.
2. See Figure 8-10. Remove cap (1).
3. Remove upper fork bracket (4). See 3.18 FRONT FORK.
4. Remove ignition switch.
   a. Remove screws (5).
   b. Remove ignition switch (2).

INSTALL

FASTENER	TORQUE VALUE	
Ignition switch screws	6.2-6.8 Nm	55-60 **in-lbs**

1. See Figure 8-10. Install ignition switch.
   a. Install ignition switch (2).
   b. Install screws (5). Tighten to 6.2-6.8 Nm (55-60 **in-lbs**).
   c. Cycle ignition switch to the fork lock position. Verify lock bar (3) operates smoothly.
2. Install upper fork bracket (4). See 3.18 FRONT FORK.
3. Install cap (1).
4. See Figure 8-9. Connect ignition switch connector.

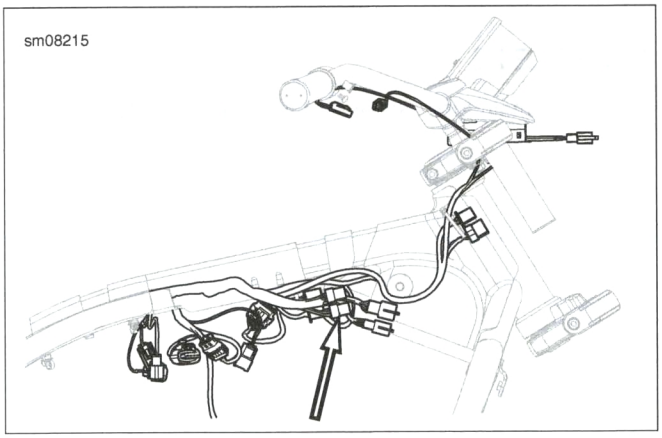

Figure 8-9. Ignition Switch Connector

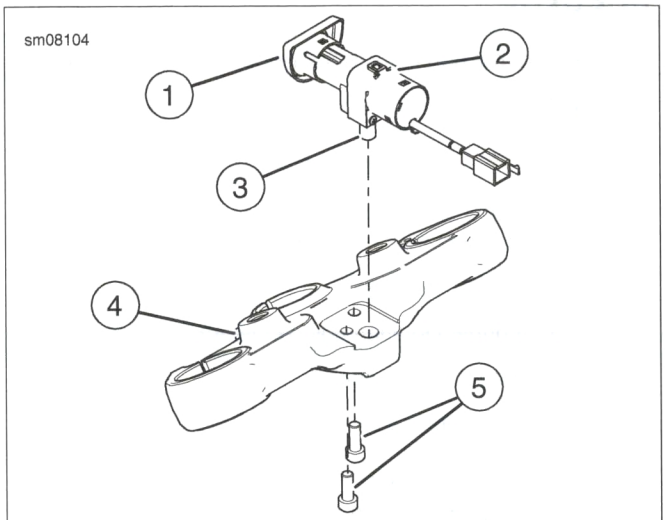

1. **Cap**
2. **Ignition switch**
3. **Lock bar**
4. **Upper fork bracket**
5. **Screw (2)**

Figure 8-10. Ignition Switch

COMPLETE

1. Install handlebar. See 3.27 HANDLEBAR.
2. Install headlamp fairing. See 3.25 HEADLAMP FAIRING.
3. Install fuel tank. See 6.5 FUEL TANK.
4. Install main fuse. See 8.4 POWER DISCONNECT.

⚠WARNING

Be sure that all lights and switches operate properly before operating motorcycle. Low visibility of rider can result in death or serious injury. (00316a)

5. Check operation of all lamps.

PREPARE

1. Remove main fuse. See 8.4 POWER DISCONNECT.

REMOVE

1. See Figure 8-11. Remove cover (4).
2. Remove ignition coil.
   a. Disconnect cables (2, 3).
   b. Remove screws (5).
   c. Disconnect ignition coil connector.
   d. Remove ignition coil (6).
   e. Remove outer bracket (7).
3. Remove inner bracket.
   a. Remove screws (8).
   b. Remove inner bracket (1).

INSTALL

FASTENER	TORQUE VALUE	
Ignition coil inner bracket screws	22.5-27.5 Nm	17-20 ft-lbs
Ignition coil screws	9.0-11.0 Nm	80-97 **in-lbs**

1. See Figure 8-11. Install inner bracket.
   a. Install inner bracket (1).
   b. Install screws (8). Tighten to 22.5-27.5 Nm (17-20 ft-lbs).
2. Install ignition coil.
   a. Install screws (5) through ignition coil (6) and outer bracket (7).
   b. Connect ignition coil connector.
   c. Attach ignition coil assembly to inner bracket with screws (5). Tighten to 9.0-11.0 Nm (80-97 **in-lbs**).
   d. Connect cables (2, 3).
3. Install cover (4).

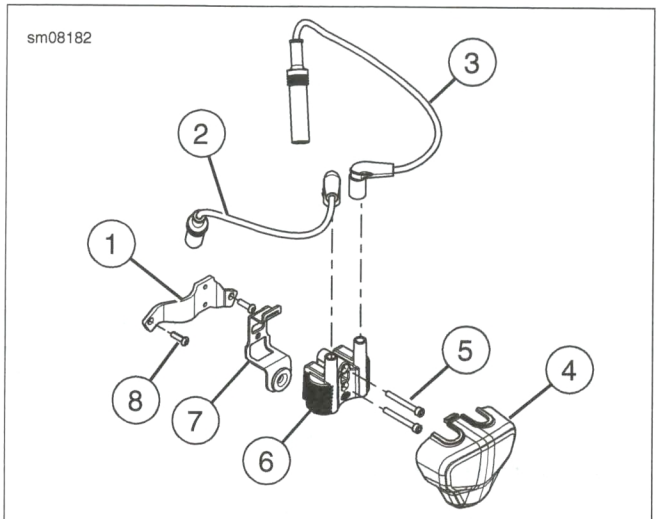

1. **Inner bracket**
2. **Front spark plug cable**
3. **Rear spark plug cable**
4. **Cover**
5. **Screw (2)**
6. **Ignition coil**
7. **Outer bracket**
8. **Screw (2)**

Figure 8-11. Ignition Coil

COMPLETE

1. Install main fuse. See 8.4 POWER DISCONNECT.

REMOVE

⚠WARNING

Disconnecting spark plug cable with engine running can result in electric shock and death or serious injury. (00464b)

NOTES

- *Remove cable end by pulling on rubber boot only. Do not pull on cable or damage can result.*
- *Pull and twist simultaneously to remove rubber boot.*

1. See Figure 8-12. Remove spark plug cables (1, 2).

INSTALL

1. See Figure 8-12. Install spark plug cables (1, 2).

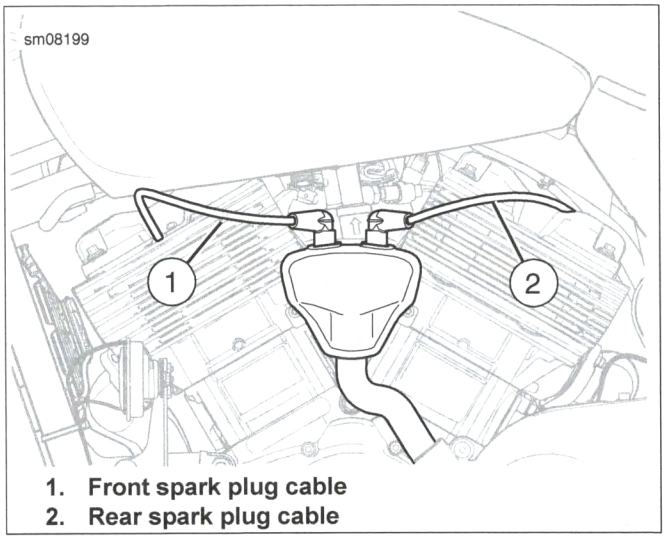

1. **Front spark plug cable**
2. **Rear spark plug cable**

Figure 8-12. Spark Plug Cables

PREPARE

1. Remove main fuse. See 8.4 POWER DISCONNECT.
2. Remove fuel tank. See 6.5 FUEL TANK.

REMOVE

1. See Figure 8-13. Disconnect left handlebar switch housing connector.
2. See Figure 8-14. Cut cable straps (3).
3. Remove switch housing.
   a. Remove screws (7).
   b. Remove lower switch housing (6).
   c. Remove upper switch housing (1).

INSTALL

FASTENER	TORQUE VALUE	
Handlebar switch housing screws, left	0.8-1.1 Nm	7-9 **in-lbs**

1. See Figure 8-14. Install switch housing.
   a. Install edge of lower switch housing (6) into hand grip groove (5).
   b. Align pin (2) with hole (4). Install upper switch housing (1).
   c. Install screws (7). Tighten to 0.8-1.1 Nm (7-9 **in-lbs**).
2. See Figure 8-13. Connect left handlebar switch housing connector.
3. See Figure 8-14. Install **new** cable straps (3).

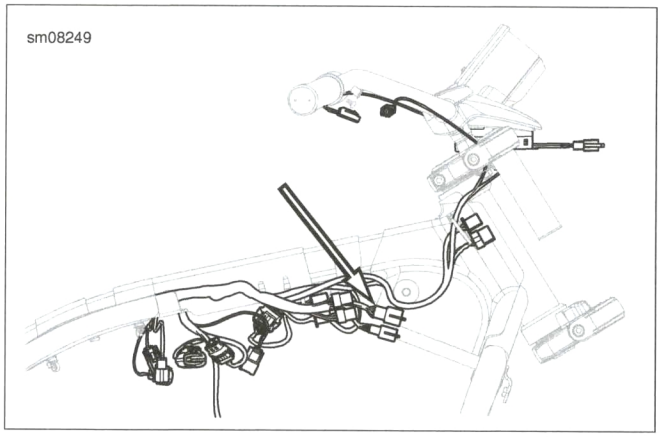

Figure 8-13. Left Handlebar Switch Housing Connector

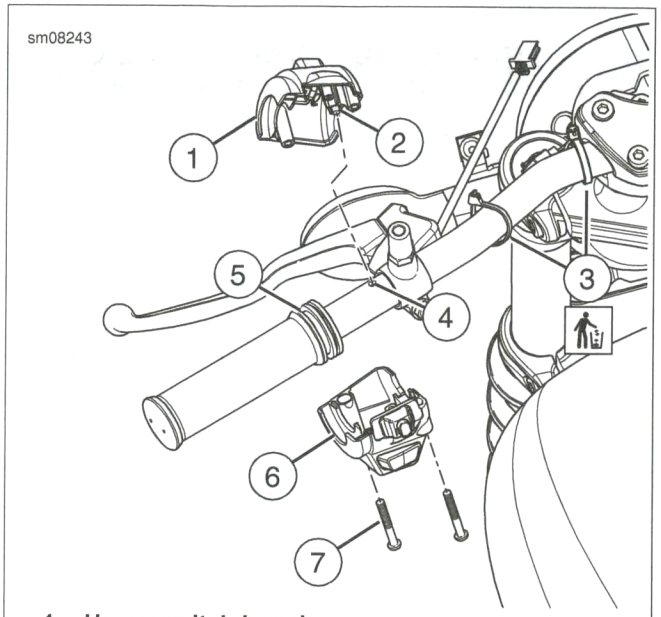

1. **Upper switch housing**
2. **Alignment pin**
3. **Cable strap (2)**
4. **Alignment hole**
5. **Tab**
6. **Lower switch housing**
7. **Screw (2)**

Figure 8-14. Left Hand Grip

COMPLETE

1. Install fuel tank. See 6.5 FUEL TANK.
2. Install main fuse. See 8.4 POWER DISCONNECT.

⚠WARNING

Be sure that all lights and switches operate properly before operating motorcycle. Low visibility of rider can result in death or serious injury. (00316a)

3. Check operation of all lamps.

PREPARE

1. Remove main fuse. See 8.4 POWER DISCONNECT.
2. Remove fuel tank. See 6.5 FUEL TANK.

REMOVE

1. See Figure 8-15. Disconnect right handlebar switch housing connector.
2. Remove right hand grip and throttle cables. See 3.24 THROTTLE CONTROL.

INSTALL

1. Install right hand grip and throttle cables. See 3.24 THROTTLE CONTROL.
2. See Figure 8-15. Connect right handlebar switch housing connector.

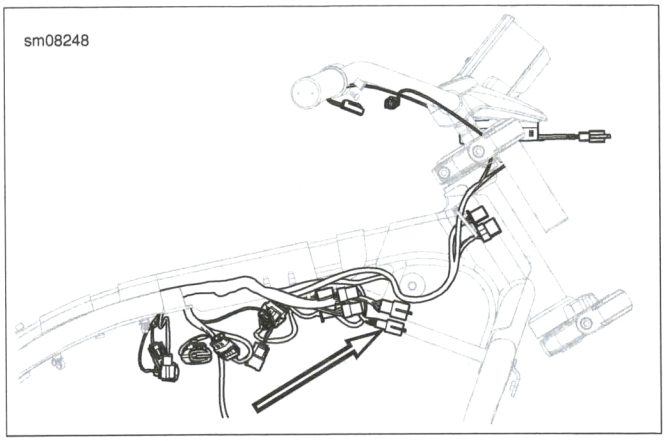

Figure 8-15. Right Handlebar Switch Housing Connector

COMPLETE

1. Install fuel tank. See 6.5 FUEL TANK.
2. Install main fuse. See 8.4 POWER DISCONNECT.

PREPARE

1. Remove main fuse. See 8.4 POWER DISCONNECT.
2. Remove headlamp fairing. See 3.25 HEADLAMP FAIRING.
3. Detach handlebar from lower riser. See 3.27 HANDLEBAR.

REMOVE

1. See Figure 8-16. Disconnect speedometer connectors.
2. See Figure 8-17. Remove speedometer.
   a. Remove screws (1).
   b. Remove discharge plate (3).
   c. Remove speedometer (2).

INSTALL

FASTENER	TORQUE VALUE	
Speedometer screws	10.8-13.2 Nm	96-116 **in-lbs**

1. See Figure 8-17. Install speedometer.
   a. Install speedometer (2).
   b. Install discharge plate (3).
   c. Install screws (1). Tighten to 10.8-13.2 Nm (96-116 **in-lbs**).
2. See Figure 8-16. Connect speedometer connectors.

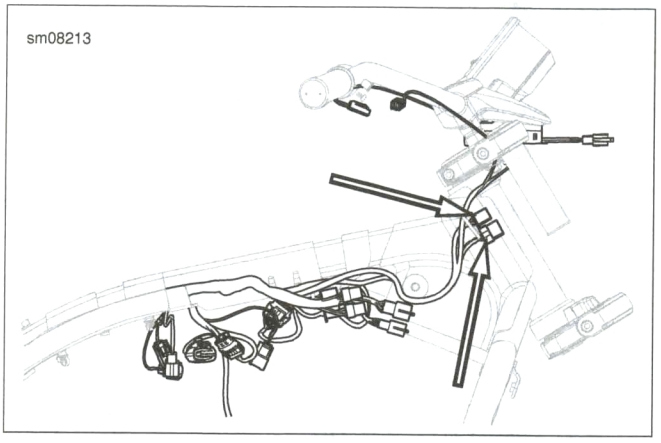

Figure 8-16. Speedometer Connectors

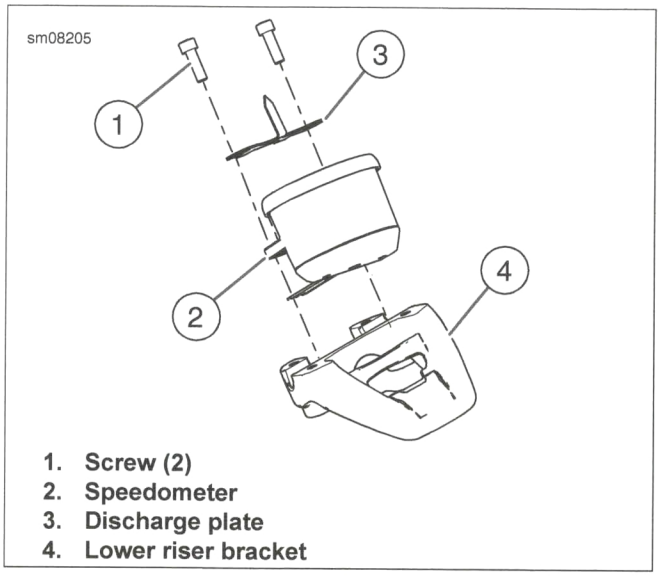

1. **Screw (2)**
2. **Speedometer**
3. **Discharge plate**
4. **Lower riser bracket**

Figure 8-17. Speedometer

COMPLETE

1. Install handlebar. See 3.27 HANDLEBAR.
2. Install headlamp fairing. See 3.25 HEADLAMP FAIRING.
3. Install main fuse. See 8.4 POWER DISCONNECT.

PREPARE

1. Remove main fuse. See 8.4 POWER DISCONNECT.

REMOVE

NOTE

Replace oil pressure switch if it is removed.

1. Figure 8-18. Remove oil pressure switch connector (1).
2. Discard oil pressure switch (2).

INSTALL

FASTENER	TORQUE VALUE	
Oil pressure switch	10.0-12.0 Nm	89-106 **in-lbs**

1. Figure 8-18. Install **new** oil pressure switch (2). Tighten to 10.0-12.0 Nm (89-106 **in-lbs**).
2. Install oil pressure switch connector (1).

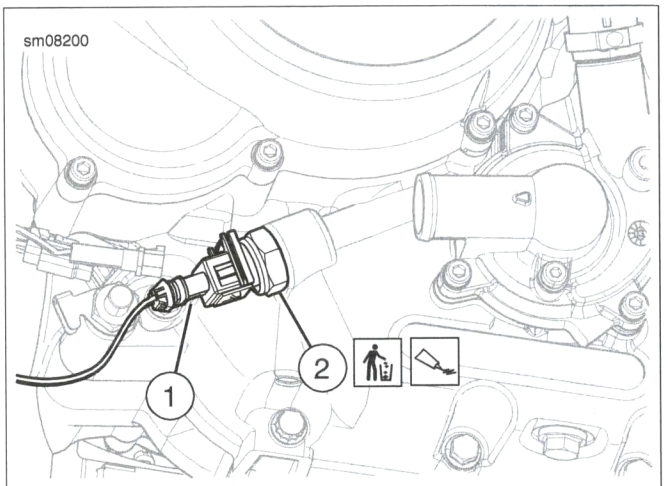

1. Oil pressure switch connector
2. Oil pressure switch

Figure 8-18. Oil Pressure Switch

COMPLETE

1. Install main fuse. See 8.4 POWER DISCONNECT.

PREPARE

1. Remove front belt guard. See 3.21 BELT GUARDS.
2. Disconnect negative battery cable. See 8.4 POWER DISCONNECT.

REMOVE

1. See Figure 8-19. Disconnect neutral switch connector.
   a. Disconnect neutral switch connector (1).
   b. Discard cable strap (2).
2. See Figure 8-20. Remove neutral switch.
   a. Discard cable strap (3).
   b. Remove screws (1).
   c. Remove neutral switch (2).

INSTALL

FASTENER	TORQUE VALUE	
Neutral switch screws	5.0-7.0 Nm	45-62 **in-lbs**

1. See Figure 8-20. Install neutral switch.
   a. Install neutral switch (2).
   b. Install screws (1). Tighten to 5.0-7.0 Nm (45-62 **in-lbs**).
   c. Install **new** cable strap (3).
2. See Figure 8-19. Connect neutral switch connector.
   a. Connect neutral switch connector (1).
   b. Install **new** cable strap (2).

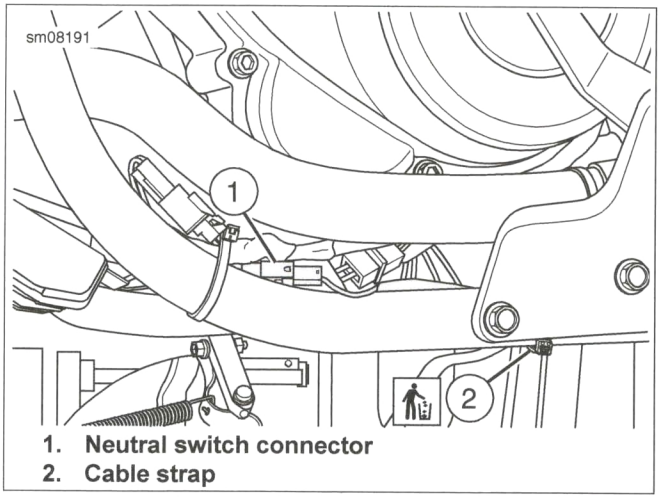

1. Neutral switch connector
2. Cable strap

Figure 8-19. Neutral Switch Connector

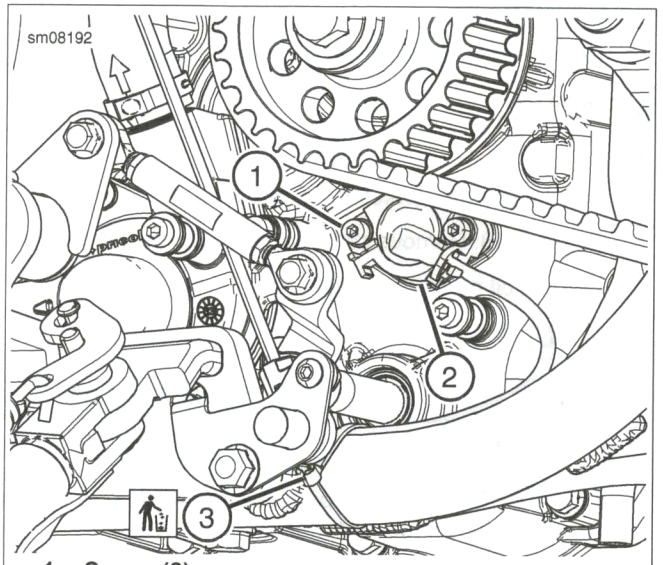

1. Screw (2)
2. Neutral switch
3. Cable strap

Figure 8-20. Neutral Switch

COMPLETE

1. Connect negative battery cable. See 8.4 POWER DISCONNECT.
2. Install front belt guard. See 3.21 BELT GUARDS.
3. Test neutral switch.
   a. Turn ignition switch ON.
   b. Verify transmission is in NEUTRAL.
   c. Verify that the neutral indicator light illuminates.

PREPARE

1. Remove main fuse. See 8.4 POWER DISCONNECT.

REMOVE

1. See Figure 8-21. Disconnect horn connectors (3).
2. Remove horn.
   a. Remove screws (1).
   b. Remove horn (2).
3. Remove bracket.
   a. Remove screws (5).
   b. Remove bracket (4).

INSTALL

FASTENER	TORQUE VALUE	
Horn bracket screws	42.7-47.3 Nm	32-34 ft-lbs
Horn screws	4.5-5.5 Nm	40-48 **in-lbs**

1. See Figure 8-21. Install bracket.
   a. Install bracket (4).
   b. Install screws (5). Tighten to 42.7-47.3 Nm (32-34 ft-lbs).
2. Install horn.
   a. Install horn (2).
   b. Install screws (1). Tighten to 4.5-5.5 Nm (40-48 **in-lbs**).
3. Connect horn connectors (3).

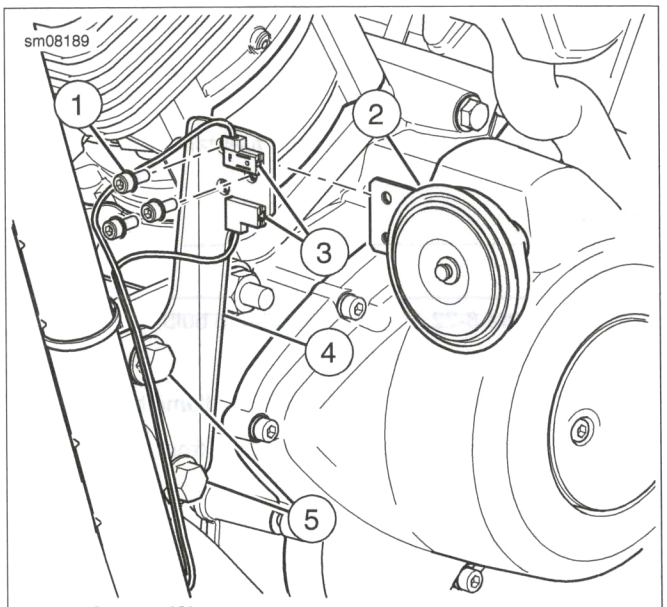

1. **Screw (3)**
2. **Horn**
3. **Horn connector (2)**
4. **Bracket**
5. **Screw (2)**

Figure 8-21. Horn

COMPLETE

1. Install main fuse. See 8.4 POWER DISCONNECT.

PREPARE

1. Remove main fuse. See 8.4 POWER DISCONNECT.
2. Remove headlamp fairing. See 3.25 HEADLAMP FAIRING.
3. If removing headlamp, remove fuel tank. See 6.5 FUEL TANK.

REMOVE

Bulb

1. See Figure 8-22. Remove headlamp bulb.
   a. Remove screws (6).
   b. Pull lens assembly (5) from headlamp housing.
   c. Disconnect headlamp connector from bulb.
   d. Loosen screw (2).
   e. Remove retainer (3).
   f. Remove headlamp bulb (4).
2. Remove position bulb (7).

Headlamp

1. See Figure 8-23. Disconnect position lamp connector.
2. See Figure 8-24. Remove headlamp.
   a. Discard locknut (1).
   b. Remove washer (2) and screw (3).
   c. Remove headlamp (4).
3. Remove mounting block.
   a. Discard locknut (5).
   b. Remove mounting block (6).

INSTALL

FASTENER	TORQUE VALUE	
Headlamp vertical adjustment locknut	20.6-25.5 Nm	16-18 ft-lbs
Headlamp horizontal adjustment locknut	34.2-41.8 Nm	26-30 ft-lbs

Bulb

NOTICE

Never touch the quartz bulb. Fingerprints will etch the glass and decrease bulb life. Handle the bulb with paper or a clean, dry cloth. Failure to do so could result in bulb damage. (00210b)

1. See Figure 8-22. Install position bulb (7).
2. Install headlamp bulb.
   a. Install headlamp bulb (4).
   b. Install retainer (3).
   c. Tighten screw (2).
   d. Connect headlamp and position lamp connectors.
   e. Attach lens assembly (5) to headlamp housing.
   f. Install screws (6).

Headlamp

1. See Figure 8-24. Install mounting block.
   a. Install mounting block (6).
   b. Install **new** locknut (5). Tighten to 20.6-25.5 Nm (16-18 ft-lbs).
2. Install headlamp.
   a. Install headlamp (4).
   b. Install screw (3) and washer (2).
   c. Install **new** locknut (1). Tighten to 34.2-41.8 Nm (26-30 ft-lbs).
3. See Figure 8-23. Connect headlamp connector.

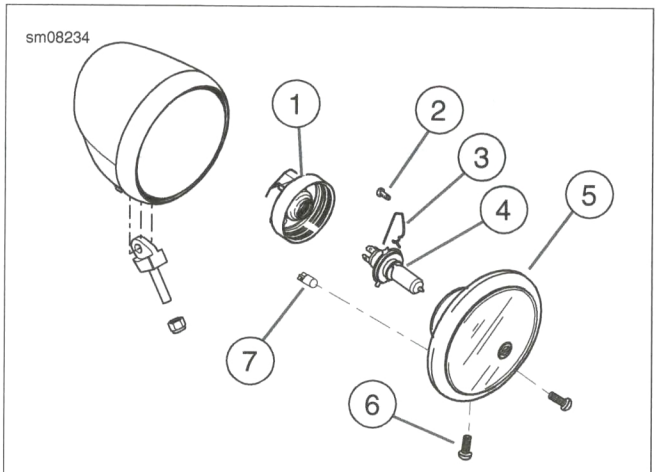

1. **Boot**
2. **Screw**
3. **Retainer**
4. **Headlamp bulb**
5. **Lens assembly**
6. **Screw (2)**
7. **Position bulb**

Figure 8-22. Headlamp Bulb

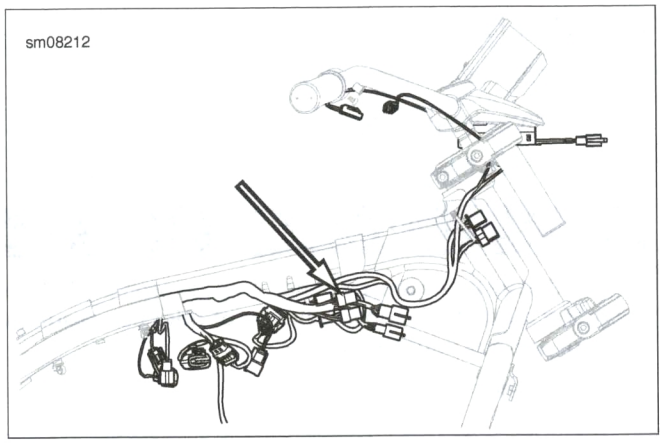

Figure 8-23. Headlamp Connector

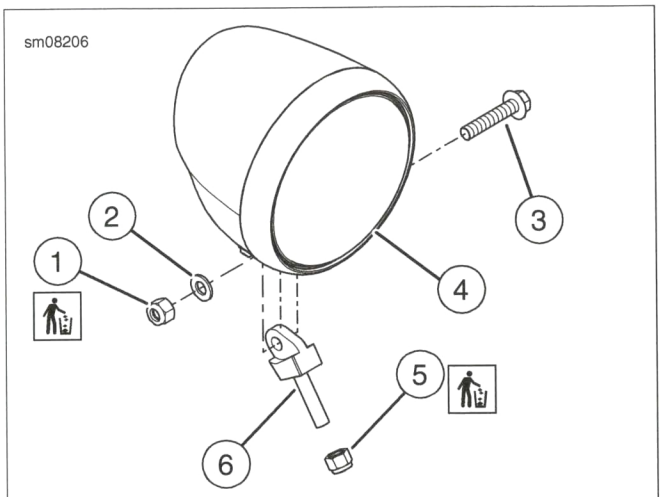

1. **Locknut**
2. **Washer**
3. **Screw**
4. **Headlamp**
5. **Locknut**
6. **Mounting block**

Figure 8-24. Headlamp

ALIGN

1. Prepare motorcycle.
   a. Check tire pressure. See 2.6 INSPECT TIRES.
   b. Adjust shock preload for rider and intended load. See 3.22 SHOCK ABSORBERS.
   c. Fill fuel tank or add an equal amount of ballast.
2. See Figure 8-25. Check alignment.
   a. Park the motorcycle on a line (1) perpendicular to wall.
   b. Position motorcycle so that front axle is 7.6 m (25 ft) from wall.
   c. Draw a vertical line (2) on wall.
   d. Point the front wheel straight forward at wall.
   e. Measure distance (4) from floor to center of high beam bulb.
   f. With the high beam activated, verify headlamp alignment.
   g. Adjust as necessary.

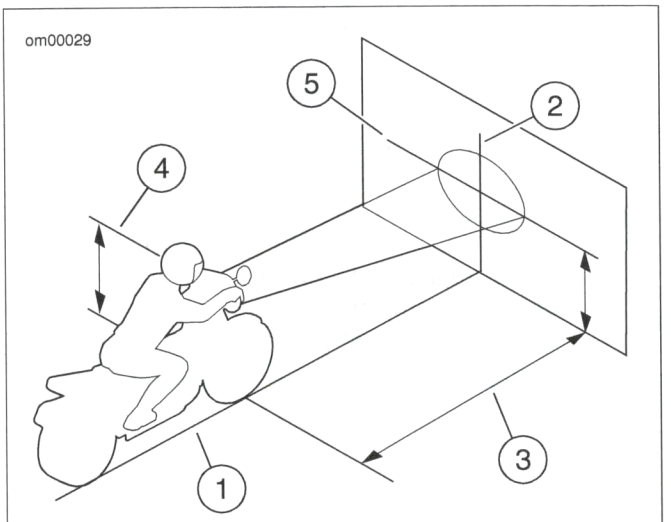

1. **Perpendicular line**
2. **Vertical line**
3. **7.6 m (25 ft)**
4. **High beam bulb centerline**
5. **Horizontal line 53.3 mm (2.1 in) lower than bulb centerline**

Figure 8-25. Checking Headlamp Alignment

ADJUST

FASTENER	TORQUE VALUE	
Headlamp horizontal adjustment locknut	34.2-41.8 Nm	26-30 ft-lbs
Headlamp vertical adjustment locknut	20.6-25.5 Nm	16-18 ft-lbs

1. See Figure 8-26. Set horizontal adjustment.
   a. Loosen horizontal adjustment locknut (3).
   b. Direct light beam straight ahead.
   c. Tighten horizontal adjustment locknut to 34.2-41.8 Nm (26-30 ft-lbs).

2. Set vertical adjustment.
   a. Loosen locknut (1) for vertical adjustment bolt (2).
   b. Aim headlamp at horizontal line on wall.
   c. Tighten vertical adjustment locknut to 20.6-25.5 Nm (16-18 ft-lbs).

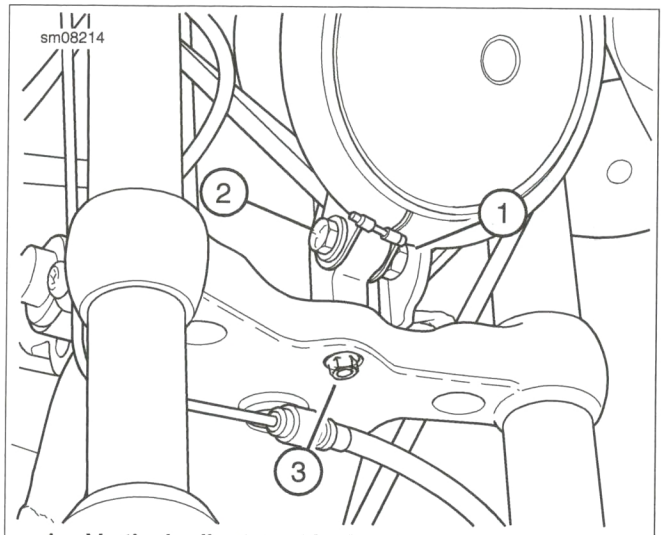

1. **Vertical adjustment locknut**
2. **Vertical adjustment bolt**
3. **Horizontal adjustment locknut**

Figure 8-26. Headlamp Adjustment

COMPLETE

1. Install fuel tank, if removed. See 6.5 FUEL TANK.
2. Install headlamp fairing. See 3.25 HEADLAMP FAIRING.
3. Install main fuse. See 8.4 POWER DISCONNECT.

⚠WARNING

Be sure that all lights and switches operate properly before operating motorcycle. Low visibility of rider can result in death or serious injury. (00316a)

4. Test headlamp for proper operation.

PREPARE

1. Remove main fuse. See 8.4 POWER DISCONNECT.
2. If removing turn signal lamp, remove fuel tank. See 6.5 FUEL TANK.

REMOVE

Bulb

1. See Figure 8-28. Remove bulb.
   a. Remove lens screw (3).
   b. Remove lens (4).
   c. Remove bulb.

Lamp

1. See Figure 8-27. Disconnect turn signal connectors (1, 2).
2. See Figure 8-28. Remove turn signal lamp.
   a. Remove screw (2) and nut (1).
   b. Remove turn signal lamp.

INSTALL

FASTENER	TORQUE VALUE	
Turn signal lens screw	0.6-0.8 Nm	5-7 **in-lbs**
Turn signal housing screws, front	9.0-11.0 Nm	80-97 **in-lbs**

Bulb

1. See Figure 8-28. Install bulb.
   a. Install bulb.
   b. Install lens (4).
   c. Install lens screw (3). Tighten to 0.6-0.8 Nm (5-7 **in-lbs**).

Lamp

1. See Figure 8-28. Install turn signal lamp.
   a. Install turn signal lamp.
   b. Install housing screw (2) and nut (1). Tighten to 9.0-11.0 Nm (80-97 **in-lbs**).
2. See Figure 8-27. Connect turn signal connectors (1, 2).

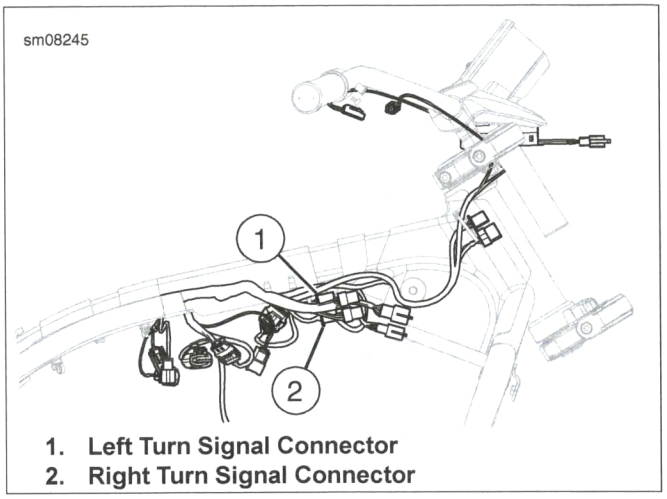

1. Left Turn Signal Connector
2. Right Turn Signal Connector

Figure 8-27. Front Turn Signal Connectors

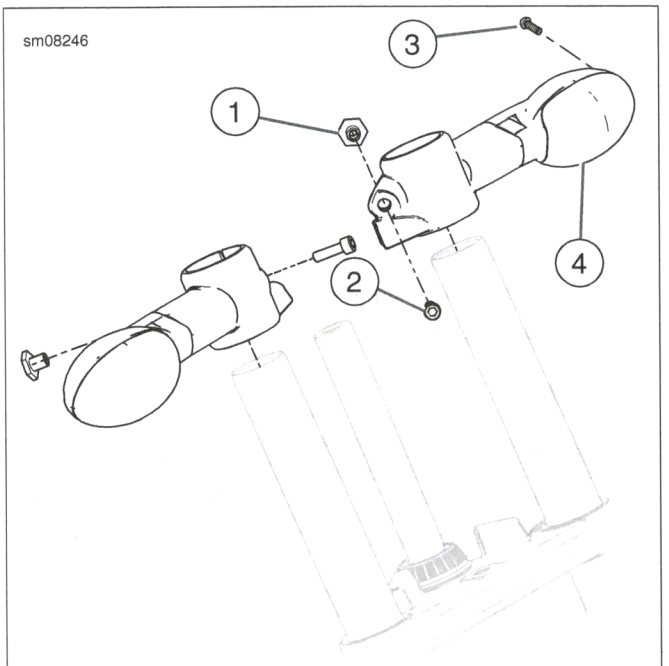

1. Nut
2. Housing screw
3. Lens screw
4. Lens

Figure 8-28. Front Turn Signals

COMPLETE

1. Install fuel tank, if removed. See 6.5 FUEL TANK.
2. Install main fuse. See 8.4 POWER DISCONNECT.

⚠WARNING

Be sure that all lights and switches operate properly before operating motorcycle. Low visibility of rider can result in death or serious injury. (00316a)

3. Check operation of all lamps.

PREPARE

1. Remove main fuse. See 8.4 POWER DISCONNECT.
2. If removing rear turn signal lamp:
   a. Remove seat. See 3.36 SEAT.
   b. Remove rear fender. See 3.30 REAR FENDER.

REMOVE

Bulb

1. See Figure 8-29. Remove bulb.
   a. Remove lens screw (3).
   b. Remove lens (1).
   c. Remove bulb.

Lamp

1. See Figure 8-30. Disconnect rear turn signal connector.
   a. Remove harness from retainers.
   b. Disconnect rear turn signal connector.
   c. Remove rear turn signal connector. See A.7 SUMITOMO MTW AND MTL UNSEALED CONNECTORS.
2. See Figure 8-31. Remove retainer clip.
3. See Figure 8-29. Remove turn signal lamp.
   a. Remove housing screw (2).
   b. Remove lamp.

INSTALL

FASTENER	TORQUE VALUE	
Turn signal lens screw	0.6-0.8 Nm	5-7 **in-lbs**
Turn signal housing screw, rear	3.9-5.9 Nm	35-52 **in-lbs**
Rear lighting harness retainer screw	1.2-2.0 Nm	11-17 **in-lbs**

Bulb

1. See Figure 8-29. Install bulb.
   a. Install bulb.
   b. Install lens (1).
   c. Install lens screw (3). Tighten to 0.6-0.8 Nm (5-7 **in-lbs**).

Lamp

1. See Figure 8-29. Install turn signal lamp.
   a. Install lamp.
   b. Install screw (2). Tighten to 3.9-5.9 Nm (35-52 **in-lbs**).
2. See Figure 8-30. Install rear turn signal connector.
   a. Install rear turn signal connector onto wires. See A.7 SUMITOMO MTW AND MTL UNSEALED CONNECTORS.
   b. Connect rear turn signal connector to harness.
   c. Install wires into retainers.
3. See Figure 8-31. Install retainer clip. Tighten to 1.2-2.0 Nm (11-17 **in-lbs**).

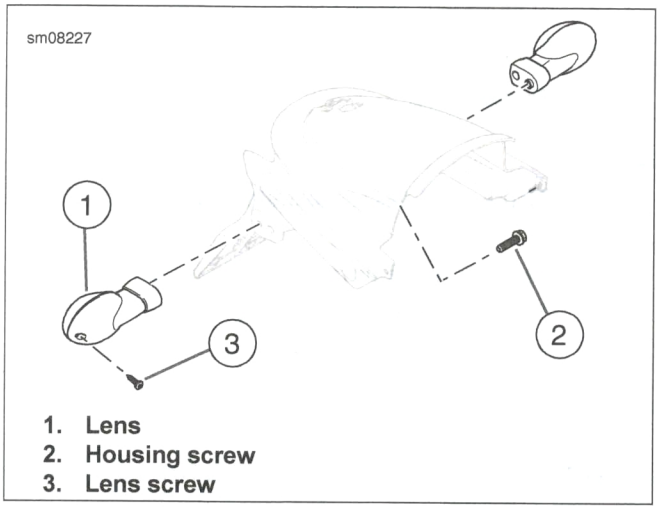

1. **Lens**
2. **Housing screw**
3. **Lens screw**

Figure 8-29. Rear Turn Signals

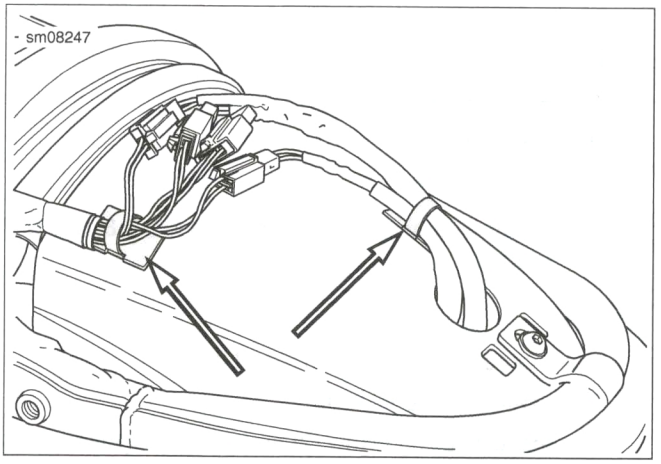

Figure 8-30. Rear Lighting Retainers and Connectors

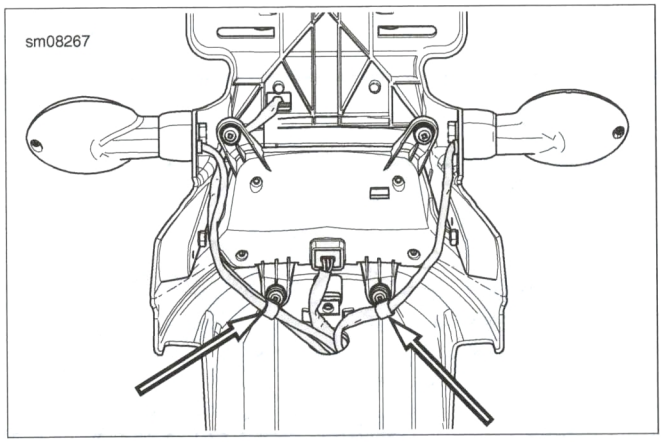

Figure 8-31. Retainer Clips

COMPLETE

1. If rear turn signal lamp was removed:
   a. Install rear fender. See 3.30 REAR FENDER.
   b. Install seat. See 3.36 SEAT.
2. Install main fuse. See 8.4 POWER DISCONNECT.

⚠WARNING

Be sure that all lights and switches operate properly before operating motorcycle. Low visibility of rider can result in death or serious injury. (00316a)

3. Check operation of all lamps.

PREPARE

1. Remove seat. See 3.36 SEAT.
2. Remove main fuse. See 8.4 POWER DISCONNECT.

REMOVE

1. See Figure 8-32. Remove turn signal flasher.
   a. Disconnect turn signal flasher connector (2).
   b. Remove turn signal flasher (1).

INSTALL

1. See Figure 8-32. Install turn signal flasher.
   a. Install turn signal flasher (1).
   b. Connect turn signal flasher connector (2).

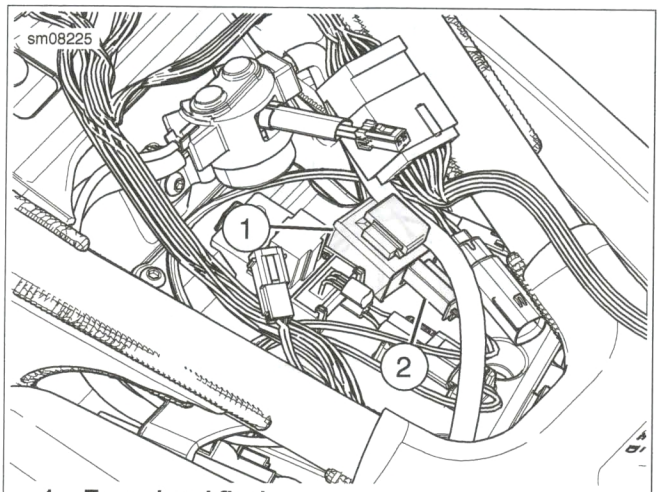

1. Turn signal flasher
2. Turn signal flasher connector

Figure 8-32. Turn Signal Flasher

COMPLETE

1. Install main fuse. See 8.4 POWER DISCONNECT.
2. Install seat. See 3.36 SEAT.

⚠WARNING

Be sure that all lights and switches operate properly before operating motorcycle. Low visibility of rider can result in death or serious injury. (00316a)

3. Test turn signals for proper operation.

PREPARE

1. Remove seat. See 3.36 SEAT.
2. Remove main fuse. See 8.4 POWER DISCONNECT.
3. Remove rear fender. See 3.30 REAR FENDER.
4. Remove rear license plate bracket. See 3.33 REAR LICENSE PLATE BRACKET.

REMOVE

1. See Figure 8-33. Disconnect tail lamp connector.
   a. Disconnect tail lamp connector.
   b. Remove harness from retainers.
2. See Figure 8-34. Remove tail lamp assembly.
   a. Remove screws (3).
   b. Remove tail lamp assembly (2).

INSTALL

FASTENER	TORQUE VALUE	
Tail lamp screws	3.9-5.9 Nm	35-52 **in-lbs**

1. See Figure 8-34. Install tail lamp assembly.
   a. Install tail lamp assembly (2).
   b. See Figure 8-35. Install retainer clips.
   c. Install screws (3). Tighten to 3.9-5.9 Nm (35-52 **in-lbs**).
2. See Figure 8-33. Connect tail lamp connector.
   a. Install harness into retainers.
   b. Connect tail lamp connector.

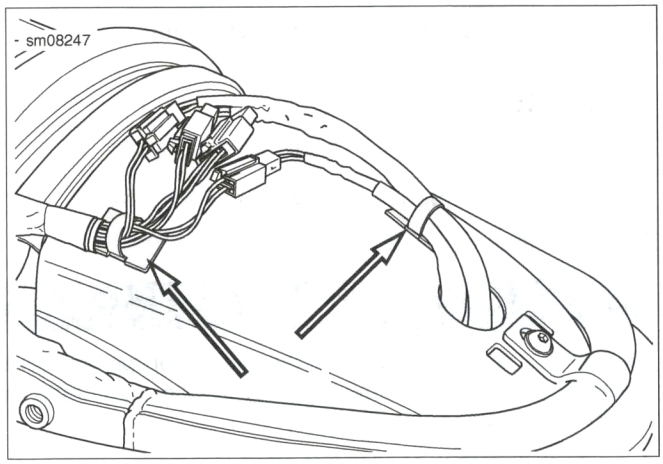

Figure 8-33. Rear Lighting Retainers and Connectors

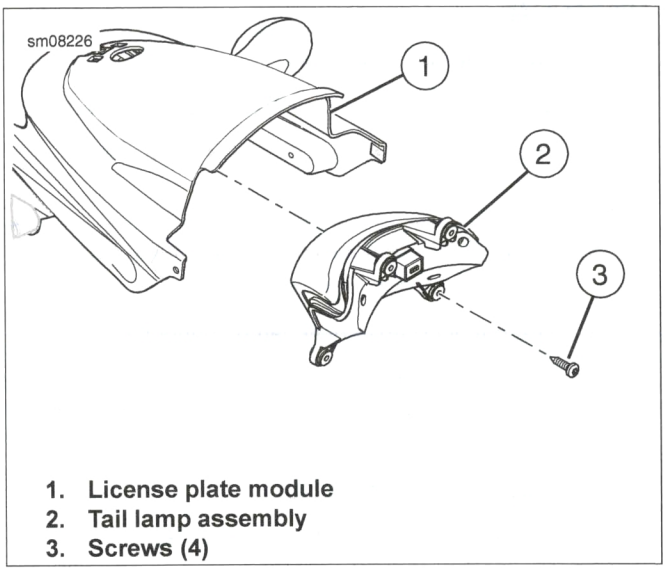

1. **License plate module**
2. **Tail lamp assembly**
3. **Screws (4)**

Figure 8-34. Tail Lamp Assembly

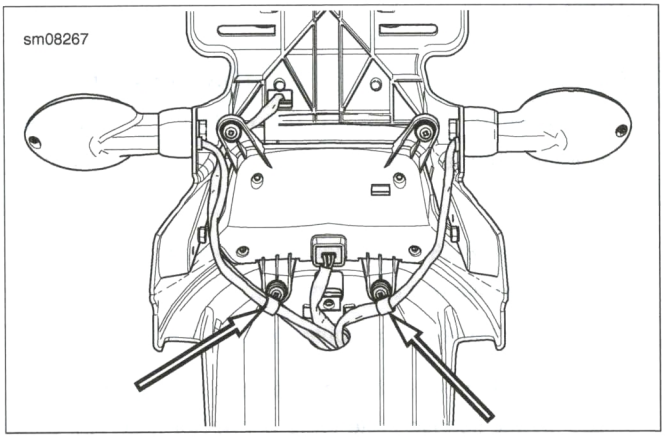

Figure 8-35. Retainer Clips

COMPLETE

1. Install rear license plate bracket. See 3.33 REAR LICENSE PLATE BRACKET.
2. Install rear fender. See 3.30 REAR FENDER.
3. Install main fuse. See 8.4 POWER DISCONNECT.
4. Install seat. See 3.36 SEAT.

⚠WARNING

Be sure that all lights and switches operate properly before operating motorcycle. Low visibility of rider can result in death or serious injury. (00316a)

5. Check operation of all lamps.

PREPARE

1. Remove seat. See 3.36 SEAT.
2. Remove main fuse. See 8.4 POWER DISCONNECT.
3. Remove rear fender. See 3.30 REAR FENDER.

REMOVE

1. See Figure 8-36. Remove license plate lamp connector.
   a. Remove harness from retainers.
   b. Disconnect license plate lamp connector.
   c. Remove license plate lamp connector. See A.7 SUMITOMO MTW AND MTL UNSEALED CONNECTORS.
2. See Figure 8-37. Remove clip.
3. See Figure 8-38. Remove license plate lamp.
   a. Remove screws (1).
   b. Remove license plate lamp (2).

INSTALL

FASTENER	TORQUE VALUE	
License plate lamp screws	0.8-1.2 Nm	7-11 **in-lbs**
Rear lighting harness retainer screw	1.2-2.0 Nm	11-17 **in-lbs**

1. See Figure 8-38. Install license plate lamp.
   a. Install license plate lamp (2).
   b. Install screws (1). Tighten to 0.8-1.2 Nm (7-11 **in-lbs**).
2. See Figure 8-36. Install license plate lamp connector.
   a. Install license plate lamp connector. See A.7 SUMITOMO MTW AND MTL UNSEALED CONNECTORS.
   b. Connect license plate lamp connector.
   c. Install harness into retainers.
3. See Figure 8-37. Install clip. Tighten to 1.2-2.0 Nm (11-17 **in-lbs**).

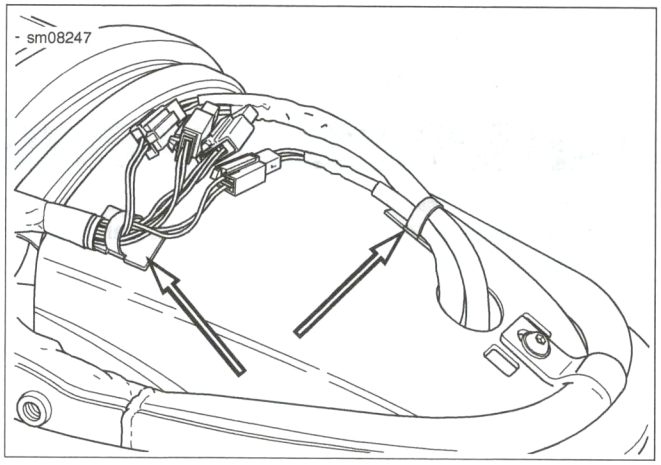

Figure 8-36. Rear Lighting Retainers and Connectors

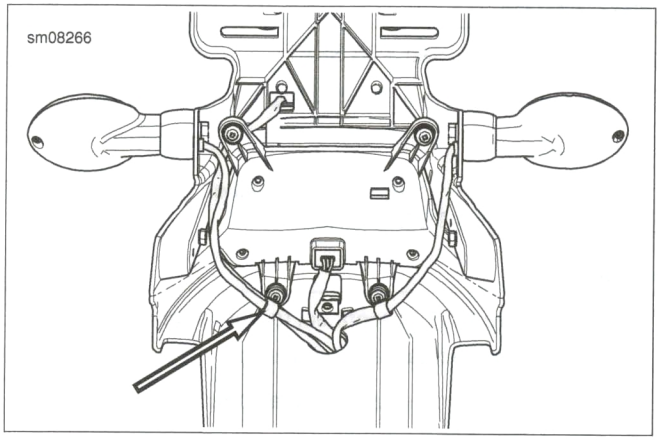

Figure 8-37. Retainer Clip

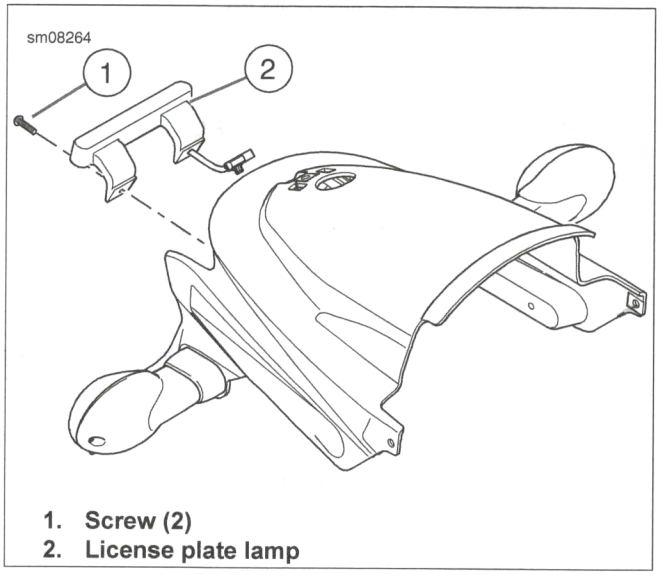

1. **Screw (2)**
2. **License plate lamp**

Figure 8-38. License Plate Lamp

COMPLETE

1. Install rear fender. See 3.30 REAR FENDER.
2. Install main fuse. See 8.4 POWER DISCONNECT.
3. Install seat. See 3.36 SEAT.

⚠WARNING

Be sure that all lights and switches operate properly before operating motorcycle. Low visibility of rider can result in death or serious injury. (00316a)

4. Check operation of all lamps.

PREPARE

1. Remove seat. See 3.36 SEAT.
2. Remove main fuse. See 8.4 POWER DISCONNECT.

REMOVE

1. See Figure 8-39. Disconnect ECM connectors.
2. See Figure 8-40. Remove ECM.
   a. Remove screws (1).
   b. Remove ECM (2).
3. Remove mud guard.
   a. Remove seat retention strap. See 3.36 SEAT.
   b. Remove screws (3).
   c. Remove mud guard (4).

INSTALL

FASTENER	TORQUE VALUE	
Mud guard screws	2.3-3.3 Nm	21-29 **in-lbs**
ECM screws	2.3-3.3 Nm	21-29 **in-lbs**

1. See Figure 8-40. Install mud guard.
   a. Install mud guard (4).
   b. Install screws (3). Tighten to 2.3-3.3 Nm (21-29 **in-lbs**).
   c. Install seat retention strap. See 3.36 SEAT.
2. Install ECM.
   a. Install ECM (2).
   b. Install screws (1). Tighten to 2.3-3.3 Nm (21-29 **in-lbs**).
3. See Figure 8-39. Connect ECM connectors.

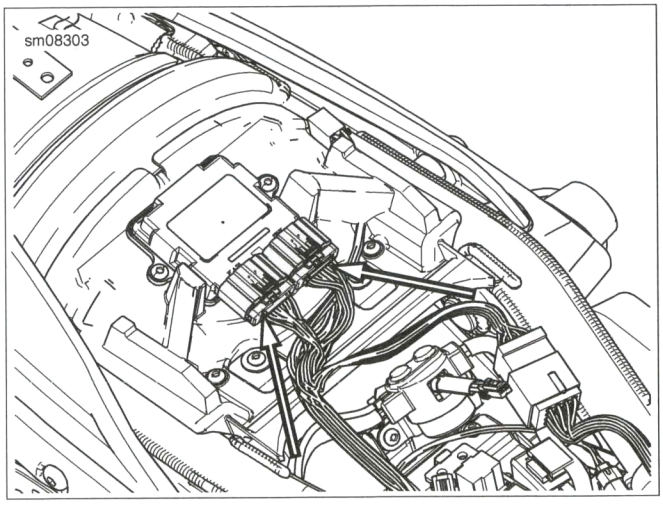

Figure 8-39. ECM Connectors

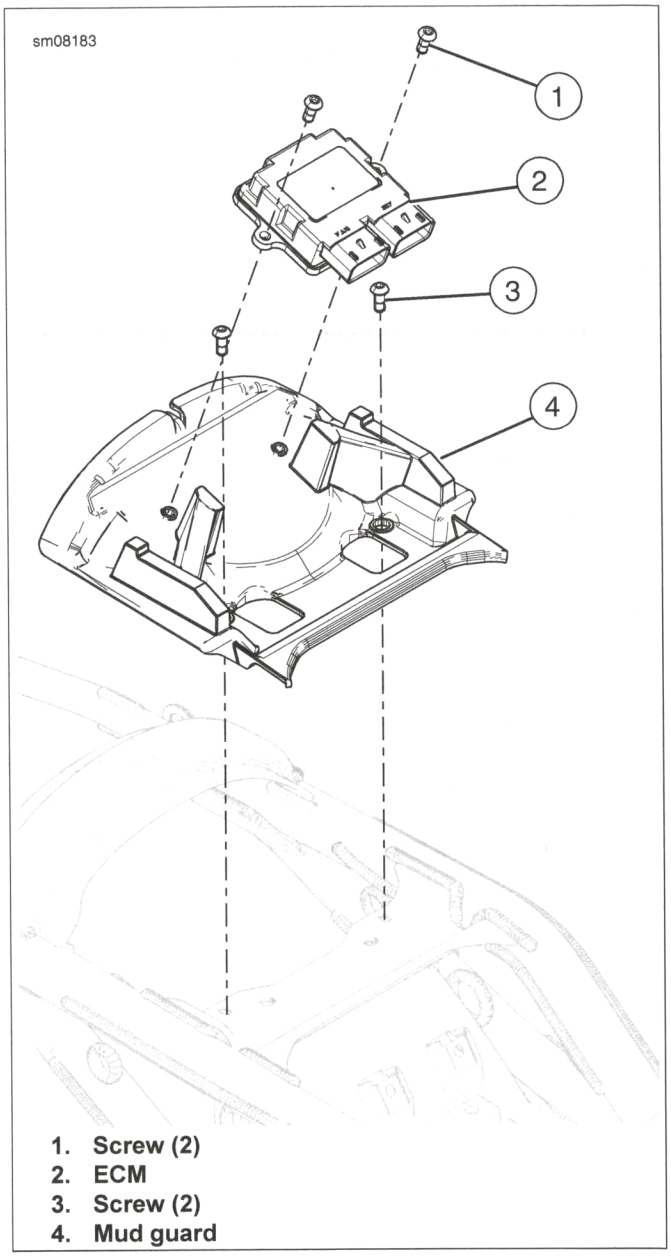

1. **Screw (2)**
2. **ECM**
3. **Screw (2)**
4. **Mud guard**

Figure 8-40. ECM

COMPLETE

1. Install seat. See 3.36 SEAT.
2. Install main fuse. See 8.4 POWER DISCONNECT.

PREPARE

1. Remove main fuse. See 8.4 POWER DISCONNECT.
2. Lift rear of fuel tank. See 6.4 LIFT REAR OF FUEL TANK.
3. Detach upper radiator hose from coolant filler neck. See 7.9 COOLANT HOSES.
4. Detach radiator from mounts. See 7.11 RADIATOR.

REMOVE

1. See Figure 8-41. Disconnect cooling fan connector (4).
2. Remove cooling fan.
   a. Remove screws (3) and washers (2).
   b. Remove cooling fan (1).

INSTALL

FASTENER	TORQUE VALUE	
Cooling fan screws	2.3-3.3 Nm	21-29 **in-lbs**

1. See Figure 8-41. Install cooling fan.
   a. Install cooling fan (1).
   b. Install screws (3) and washers (2). Tighten to 2.3-3.3 Nm (21-29 **in-lbs**).
2. Connect cooling fan connector (4).

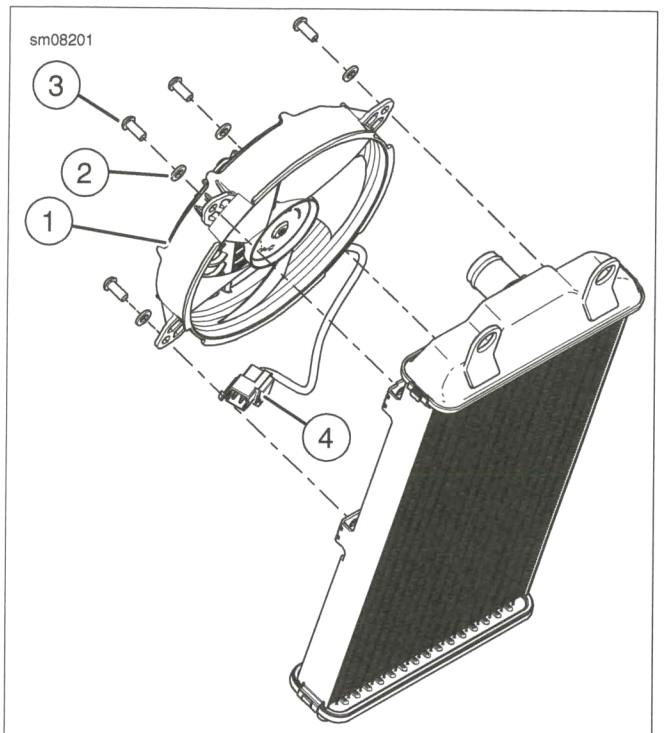

1. **Cooling fan**
2. **Washer (4)**
3. **Screw (4)**
4. **Cooling fan connector**

Figure 8-41. Cooling Fan

COMPLETE

1. Install radiator. See 7.11 RADIATOR.
2. Attach upper radiator hose to coolant filler neck. See 7.9 COOLANT HOSES.
3. Fill coolant system. See 7.5 COOLANT.
4. Secure rear of fuel tank. See 6.4 LIFT REAR OF FUEL TANK.
5. Install main fuse. See 8.4 POWER DISCONNECT.

PREPARE

1. Remove main fuse. See 8.4 POWER DISCONNECT.
2. Remove drive belt cover. See 5.4 DRIVE BELT.

REMOVE

1. See Figure 8-42. Disconnect VSS connector (2).
2. Remove VSS.
   a. Remove screw (1).
   b. Remove VSS (3).

INSTALL

FASTENER	TORQUE VALUE	
VSS screw	7.0-9.0 Nm	62-79 **in-lbs**

1. See Figure 8-42. Install VSS.
   a. Install VSS (3).
   b. Install screw (1). Tighten to 7.0-9.0 Nm (62-79 **in-lbs**).
2. Connect VSS connector (2).

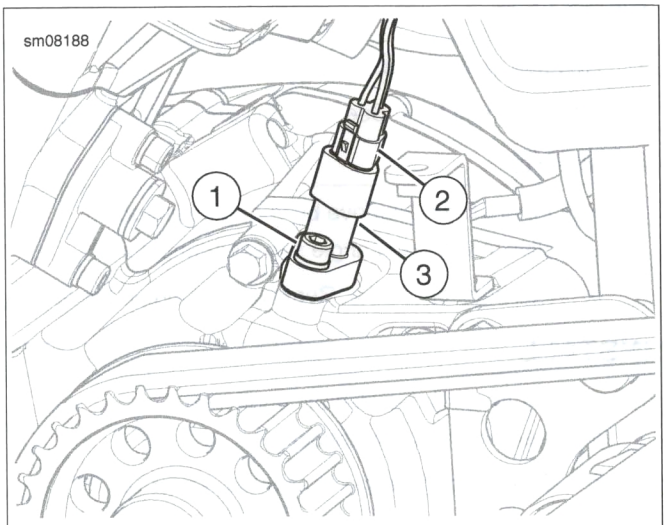

1. **Screw**
2. **VSS connector**
3. **VSS**

Figure 8-42. Vehicle Speed Sensor (VSS)

COMPLETE

1. Install drive belt cover. See 5.4 DRIVE BELT.
2. Install main fuse. See 8.4 POWER DISCONNECT.

PREPARE

1. Remove seat. See 3.36 SEAT.
2. Remove main fuse. See 8.4 POWER DISCONNECT.

REMOVE

1. See Figure 8-43. Remove bank angle sensor.
   a. Disconnect bank angle sensor connector (2).
   b. Pull back on tab (3). Remove bank angle sensor (1).

INSTALL

1. See Figure 8-43. Install bank angle sensor.
   a. Install bank angle sensor (1).
   b. Connect bank angle sensor connector (2).

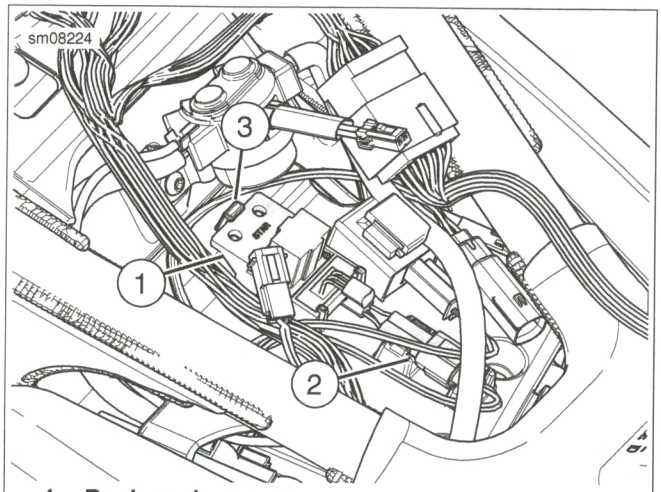

1. **Bank angle sensor**
2. **Bank angle sensor connector**
3. **Tab**

Figure 8-43. Bank Angle Sensor

COMPLETE

1. Install seat. See 3.36 SEAT.
2. Install main fuse. See 8.4 POWER DISCONNECT.

PREPARE

1. Remove main fuse. See 8.4 POWER DISCONNECT.

REMOVE

1. See Figure 8-44. Remove cable straps (6).
2. Disconnect jiffy stand sensor connector.
3. Remove jiffy stand sensor.
   a. Remove short screw (2) and nut (5).
   b. Remove long screw (1).
   c. Remove bracket (3) and jiffy stand sensor (4).

INSTALL

FASTENER	TORQUE VALUE	
Jiffy stand sensor bracket screw	22.0-29.0 Nm	17-21 ft-lbs
Jiffy stand sensor screw	9.0-11.0 Nm	80-97 **in-lbs**

1. See Figure 8-44. Install jiffy stand sensor.
   a. Install jiffy stand sensor (4) into bracket (3).
   b. Install bracket using long screw (1). Tighten to 22.0-29.0 Nm (17-21 ft-lbs).
   c. Secure jiffy stand sensor using short screw (2) and nut (5). Tighten to 9.0-11.0 Nm (80-97 **in-lbs**).
2. Connect jiffy stand sensor connector.
3. Install **new** cable straps (6).

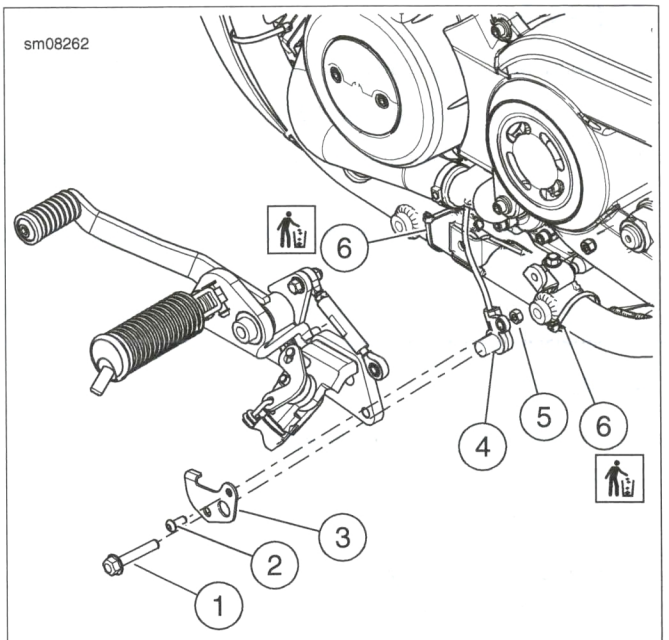

1. **Long screw**
2. **Short screw**
3. **Bracket**
4. **Jiffy stand sensor**
5. **Nut**
6. **Cable strap (2)**

Figure 8-44. Jiffy Stand Sensor

COMPLETE

1. Install main fuse. See 8.4 POWER DISCONNECT.

PREPARE

1. Remove battery. See 2.25 INSPECT BATTERY.
2. Remove rear wheel. See 3.5 REAR WHEEL.
3. Detach starter solenoid from mount. See 8.6 STARTER SOLENOID.
4. Detach bank angle sensor from mount. See 8.27 BANK ANGLE SENSOR.
5. Detach turn signal flasher from mount. See 8.21 TURN SIGNAL FLASHER.

REMOVE

1. See Figure 8-45. Remove cover.
   a. Remove screws (2).
   b. Remove cover (3).
2. Remove battery tray.
   a. Remove screws (1).
   b. Remove battery tray (4).

INSTALL

FASTENER	TORQUE VALUE	
Battery tray screws	2.3-3.3 Nm	21-29 **in-lbs**
Battery tray cover screws	2.3-3.3 Nm	21-29 **in-lbs**

1. See Figure 8-45. Install battery tray.
   a. Install battery tray (4).
   b. Install screws (1). Tighten to 2.3-3.3 Nm (21-29 **in-lbs**).
2. Install cover.
   a. Install cover (3).
   b. Install screws (2). Tighten to 2.3-3.3 Nm (21-29 **in-lbs**).

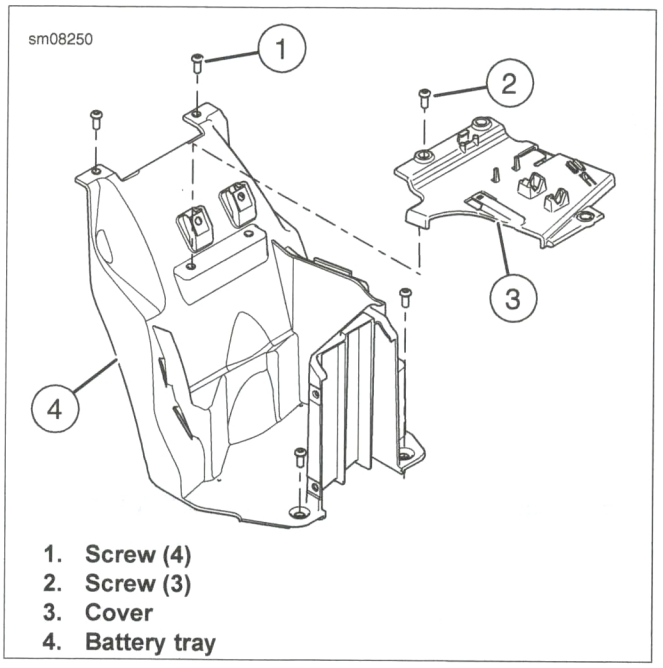

1. **Screw (4)**
2. **Screw (3)**
3. **Cover**
4. **Battery tray**

Figure 8-45. Battery Tray

COMPLETE

1. Attach turn signal flasher to mount. See 8.21 TURN SIGNAL FLASHER.
2. Attach bank angle sensor to mount. See 8.27 BANK ANGLE SENSOR.
3. Attach starter solenoid to mount. See 8.6 STARTER SOLENOID.
4. Install rear wheel. See 3.5 REAR WHEEL.
5. Install battery. See 2.25 INSPECT BATTERY.

REMOVE

1. See Figure 8-46. Remove engine ground cable.
   a. Remove nut (1).
   b. Remove screw (2).
   c. Remove engine ground cable (3).

INSTALL

FASTENER	TORQUE VALUE	
Engine ground cable screw	9.0-11.0 Nm	80-97 **in-lbs**
Engine ground cable nut	6.0-10.0 Nm	54-88 **in-lbs**

1. See Figure 8-46. Install engine ground cable.
   a. Install engine ground cable (3).
   b. Install screw (2). Tighten to 9.0-11.0 Nm (80-97 **in-lbs**).
   c. Install nut (1). Tighten to 6.0-10.0 Nm (54-88 **in-lbs**).

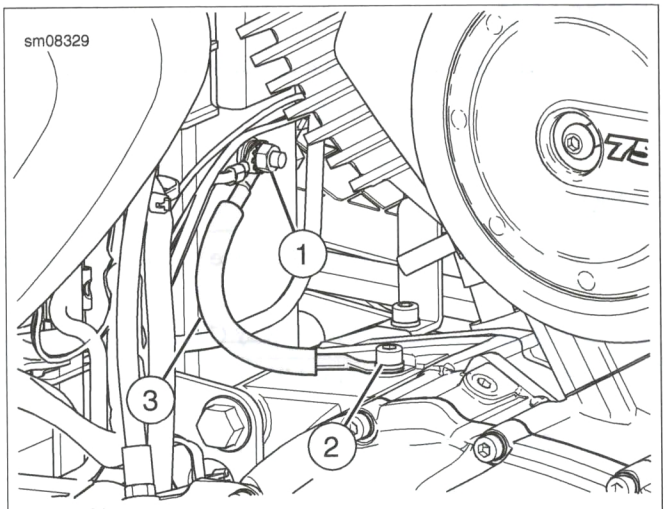

1. **Nut**
2. **Screw**
3. **Engine ground cable**

Figure 8-46. Engine Ground Cable

PREPARE

1. Remove main fuse. See 8.4 POWER DISCONNECT.
2. Remove seat. See 3.36 SEAT.
3. Lift rear of fuel tank. See 6.4 LIFT REAR OF FUEL TANK.

REMOVE

1. See Figure 8-47. Disconnect engine harness connector (2).
2. Pull harness from backbone caddy (1).
3. See Figure 8-48. Disconnect the following electrical connectors:
   a. Throttle position sensor (TPS) (2).
   b. Idle air control (IAC) (7).
   c. Temperature manifold absolute pressure (TMAP) sensor (4).
   d. Front fuel injector (5).
   e. Rear fuel injector (8).
   f. Coolant temperature sensor (3).
   g. Ignition coil (6).

INSTALL

1. See Figure 8-47. Connect engine harness connector (2).
2. Install harness into backbone caddy (1).
3. See Figure 8-48. Connect the following electrical connectors:
   a. Throttle position sensor (TPS) (2).
   b. Idle air control (IAC) (7).
   c. Temperature manifold absolute pressure (TMAP) sensor (4).
   d. Front fuel injector (5).
   e. Rear fuel injector (8).
   f. Coolant temperature sensor (3).
   g. Ignition coil (6).

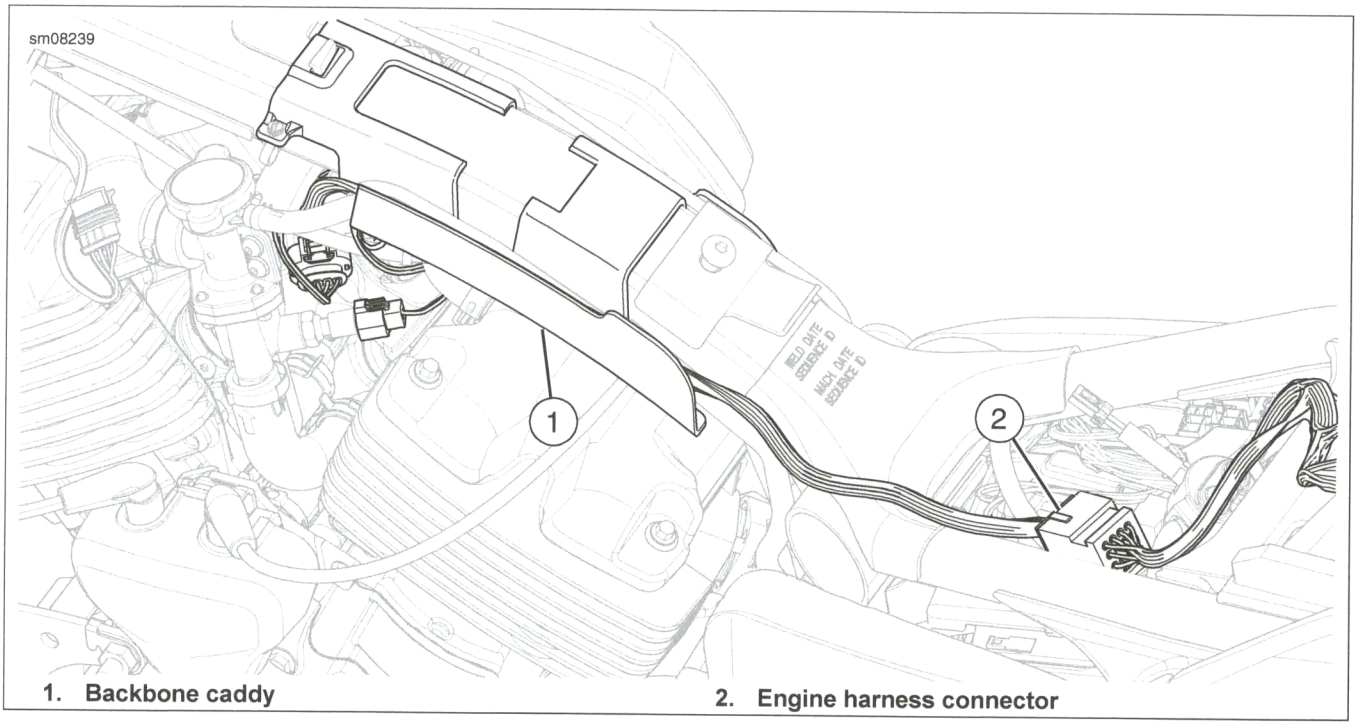

1. **Backbone caddy**
2. **Engine harness connector**

Figure 8-47. Engine Harness Routing

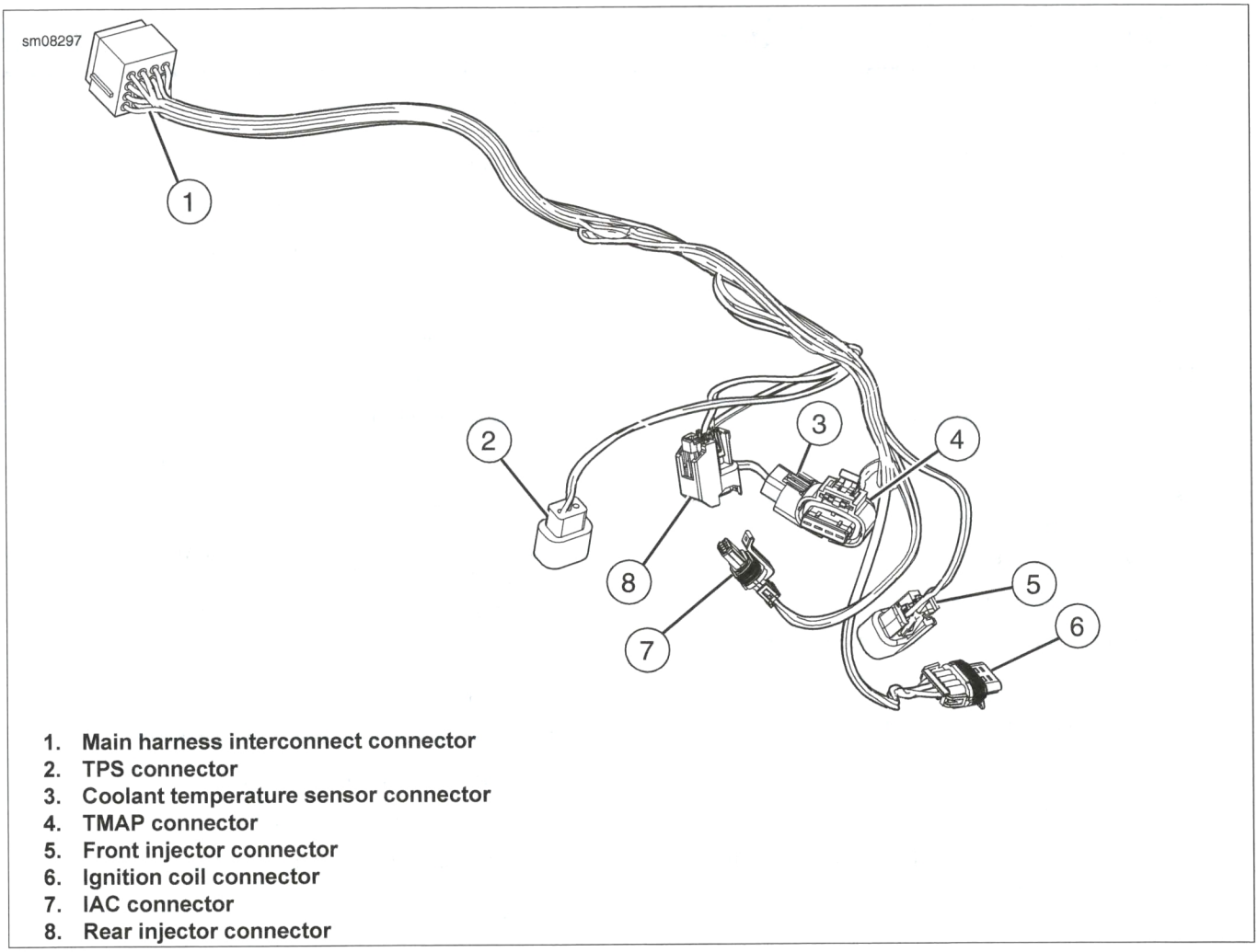

1. **Main harness interconnect connector**
2. **TPS connector**
3. **Coolant temperature sensor connector**
4. **TMAP connector**
5. **Front injector connector**
6. **Ignition coil connector**
7. **IAC connector**
8. **Rear injector connector**

Figure 8-48. Engine Harness Connectors

COMPLETE

1. Secure rear of fuel tank. See 6.4 LIFT REAR OF FUEL TANK.
2. Install seat. See 3.36 SEAT.
3. Install main fuse. See 8.4 POWER DISCONNECT.

PREPARE

1. Remove seat. See 3.36 SEAT.
2. Disconnect negative battery cable. See 8.4 POWER DISCONNECT.
3. Remove fuel tank. See 6.5 FUEL TANK.
4. Remove right side rider foot control assembly. See 3.34 RIDER FOOT CONTROLS.

REMOVE

NOTE

Remove cable straps as necessary.

1. See Figure 8-49. Remove the following electrical connectors from the left side:
   a. Horn connectors (3).
   b. Neutral switch connector (5).
   c. Crankshaft position sensor connector (4).
   d. Jiffy stand sensor connector (2).
   e. Oil pressure switch connector (1).
   f. Voltage regulator connector (6).
   g. Cooling fan connector (7).
2. See Figure 8-50. Remove the following electrical connectors from the right side:
   a. Fuse block (2).
   b. Relay blocks (1, 11).
   c. Diode pack connector (12).
   d. Data link connector (DLC) (10).
   e. Main fuse (3).
   f. Rear brake switch connectors (8).
   g. Front O2 sensor (7).
   h. Vehicle speed sensor (VSS) (4).
   i. Purge solenoid connector (9).
   j. Ground stud terminals (5, 6).
3. See Figure 8-51. Remove the following electrical connectors from the front end:
   a. Clutch switch connector (4).
   b. Front brake switch connectors (1).
   c. Speedometer connectors (5, 6).
   d. Left handlebar switch controls connector (7).
   e. Right handlebar switch controls connector (8).
   f. Headlamp connector (9).
   g. Ignition switch connector (10).
   h. Left front turn signal lamp connector (11).
   i. Right front turn signal lamp connector (2).
4. See Figure 8-52. Remove the following electrical connectors from under the seat:
   a. Rear lighting harness connector (2).
   b. ECM connectors (1).
   c. Engine harness connector (3).
   d. Rear oxygen (O2) sensor connector (6).
   e. Turn signal flasher connector (5).
   f. Starter solenoid connector (8).
   g. Bank angle sensor connector (7).
5. Remove main harness.

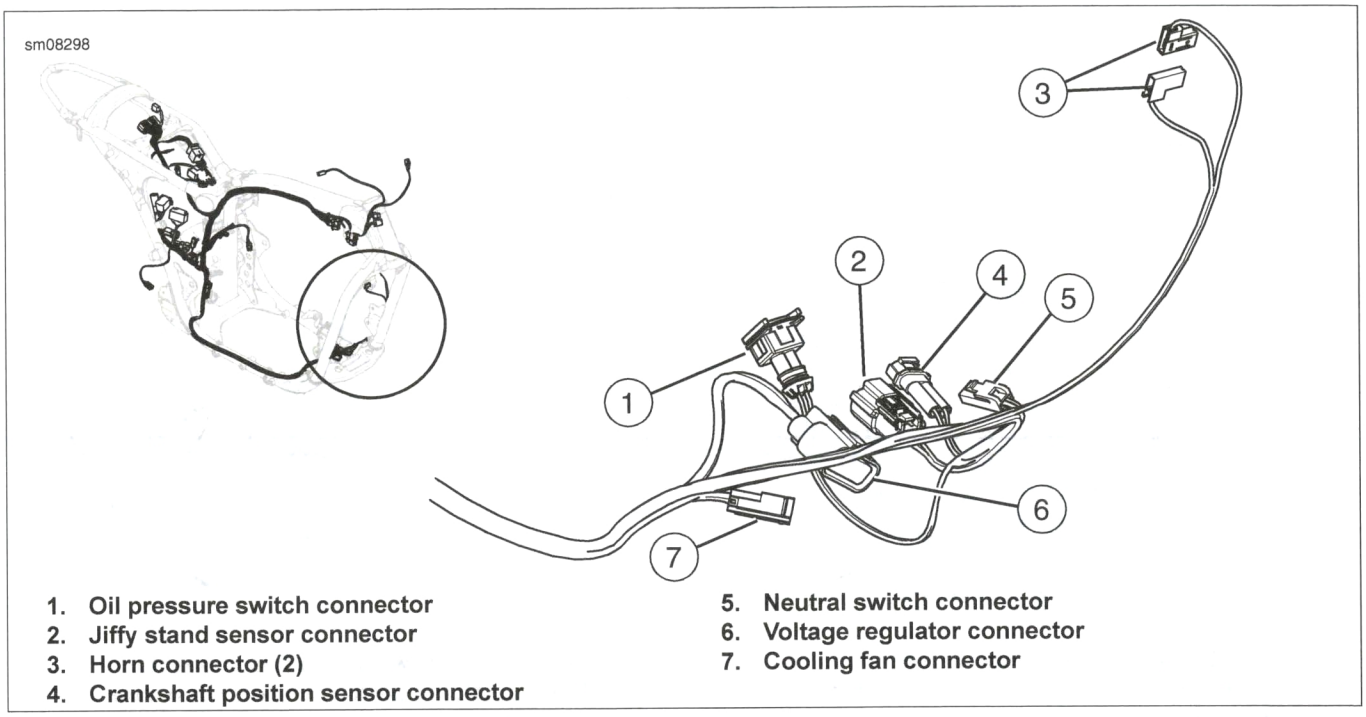

1. Oil pressure switch connector
2. Jiffy stand sensor connector
3. Horn connector (2)
4. Crankshaft position sensor connector
5. Neutral switch connector
6. Voltage regulator connector
7. Cooling fan connector

Figure 8-49. Left Side Electrical Connectors

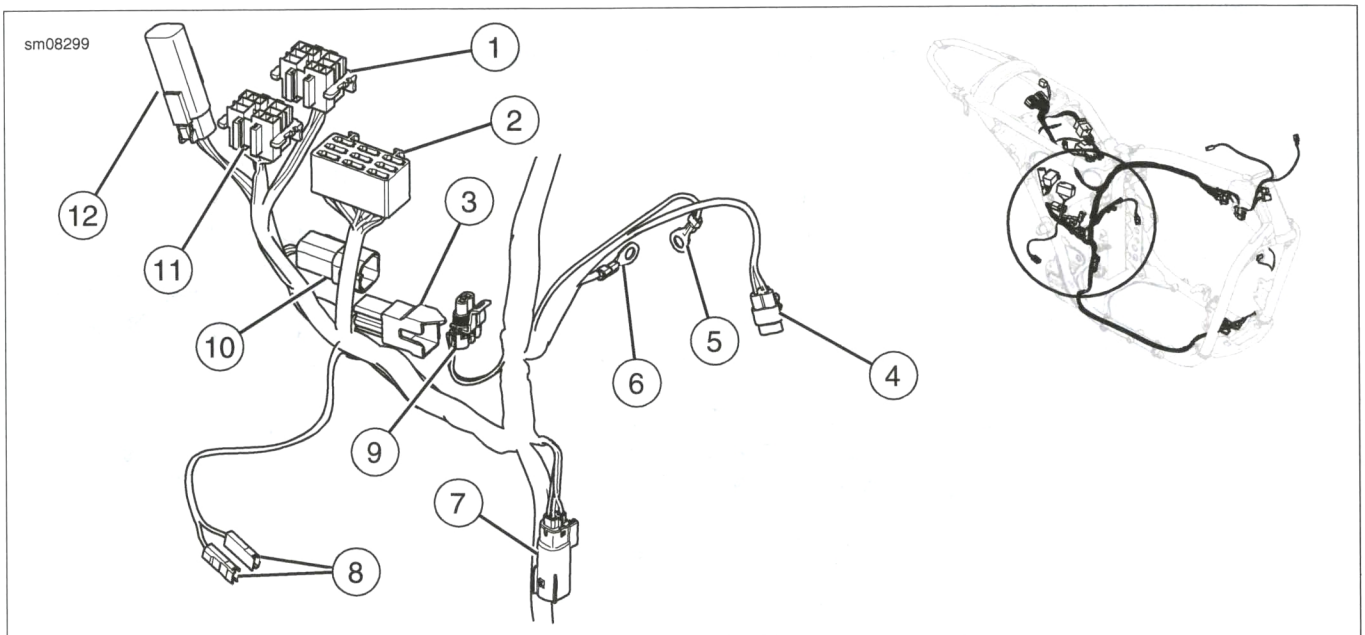

1. Relay block
2. Fuse block
3. Main fuse
4. Vehicle speed sensor (VSS) connector
5. Ground stud terminal
6. Ground stud terminal
7. Front oxygen (O2) sensor connector
8. Rear brake switch connector (2)
9. Purge solenoid connector
10. Data link connector
11. Relay block
12. Diode pack connector

Figure 8-50. Right Side Electrical Connectors

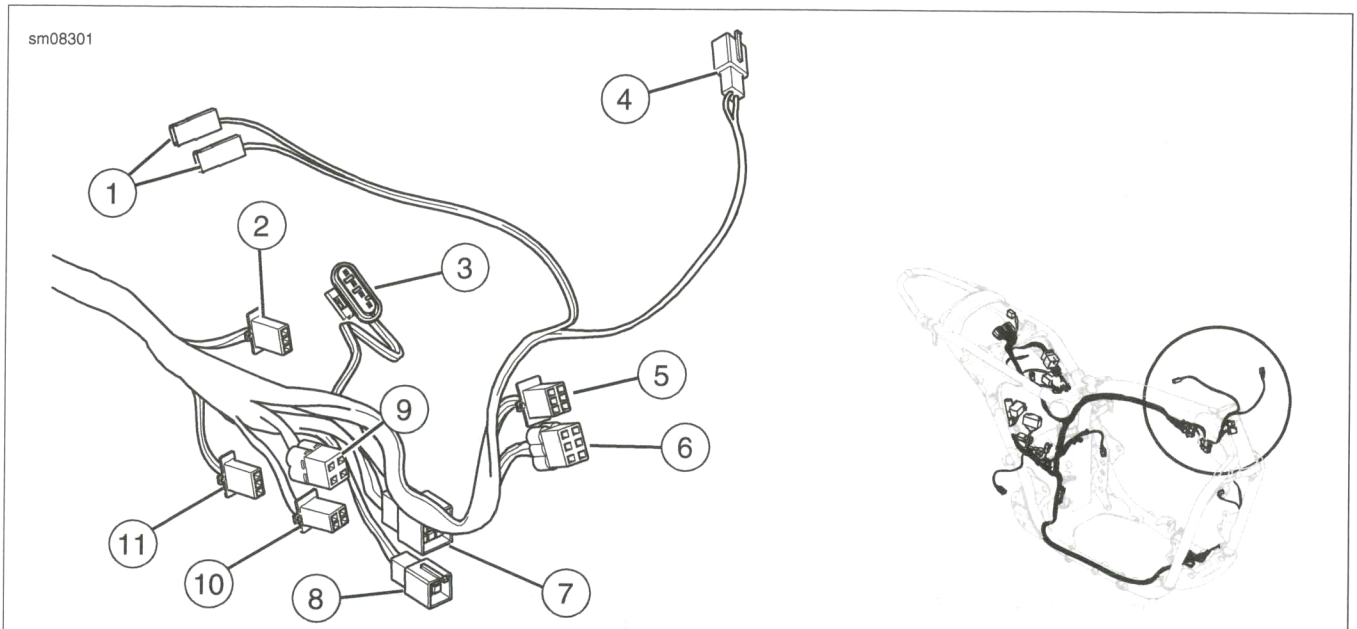

1. Front brake switch connector (2)
2. Right front turn signal lamp connector
3. Fuel pump connector
4. Clutch switch connector
5. Speedometer connector
6. Speedometer connector
7. Left handlebar switch controls connector
8. Right handlebar switch controls connector
9. Headlamp connector
10. Ignition switch connector
11. Left front turn signal lamp connector

Figure 8-51. Front Electrical Connectors

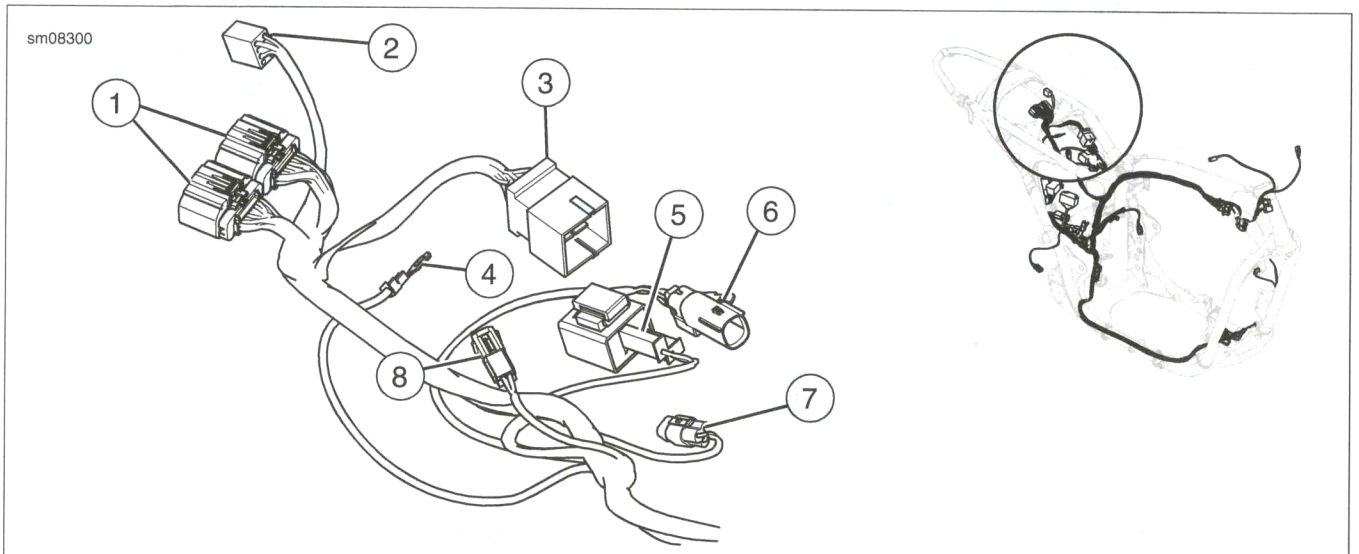

1. ECM connector (2)
2. Rear lighting connector
3. Engine harness connector
4. Battery stud terminal
5. Turn signal flasher connector
6. Rear oxygen (O2) sensor connector
7. Bank angle sensor connector
8. Starter solenoid connector

Figure 8-52. Under Seat Electrical Connectors

INSTALL

1. Place **new** harness backbone caddy onto frame.
2. See Figure 8-53. Route harness for under-seat controls as shown. Do not install cable straps.

3. See Figure 8-52. Install the following electrical connectors under the seat:
   a. Rear lighting harness connector (2).
   b. ECM connectors (1).
   c. Engine harness connector (3).
   d. Rear oxygen (O2) sensor connector (6).
   e. Turn signal flasher connector (5).
   f. Starter solenoid connector (8).
   g. Bank angle sensor connector (7).
4. See Figure 8-51. Install the following electrical connectors on the front end:
   a. Clutch switch connector (4).
   b. Front brake switch connectors (1).
   c. Speedometer connectors (5, 6).
   d. Left handlebar switch controls connector (7).
   e. Right handlebar switch controls connector (8).
   f. Headlamp connector (9).
   g. Ignition switch connector (10).
   h. Left front turn signal lamp connector (11).
   i. Right front turn signal lamp connector (2).
5. See Figure 8-53. Route harness for right side as shown. Do not install cable straps.
6. See Figure 8-50. Install the following electrical connectors on the right side:
   a. Fuse block (2).
   b. Relay blocks (1, 11).
   c. Diode pack connector (12).
   d. Data link connector (DLC) (10).
   e. Main Fuse (3).
   f. Rear brake switch connectors (8).
   g. Front oxygen (O2) sensor (7).
   h. Vehicle speed sensor (VSS) (4).
   i. Purge solenoid connector (9).
   j. Ground stud terminals (5, 6).
7. See Figure 8-49. Install the following electrical connectors on the left side:
   a. Horn connectors (3).
   b. Neutral switch connector (5).
   c. Crank position sensor connector (4).
   d. Jiffy stand sensor connector (2).
   e. Oil pressure switch connector (1).
   f. Voltage regulator connector (6).
   g. Cooling fan connector (7).
8. See Figure 8-53. Install **new** cable straps.
9. See Figure 8-54. Install **new** cable straps.
10. See Figure 8-55. Install **new** cable straps.

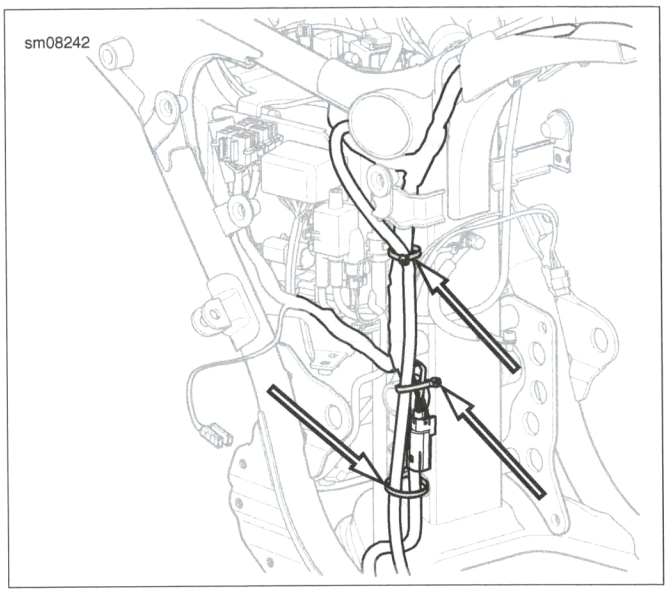

Figure 8-53. Central Tube Cable Straps

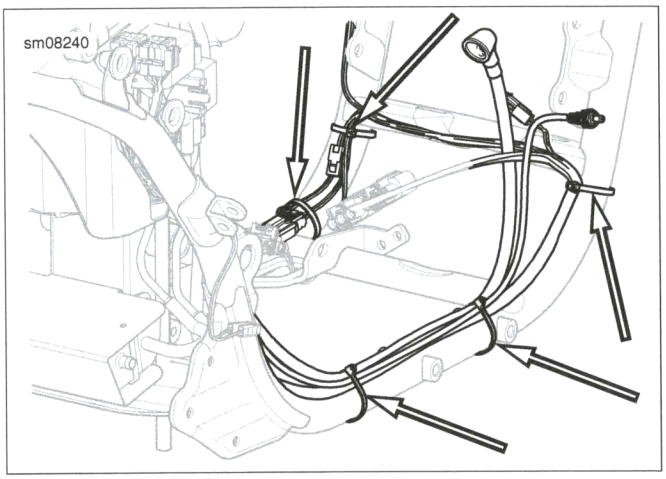

Figure 8-54. Main Harness Cable Straps

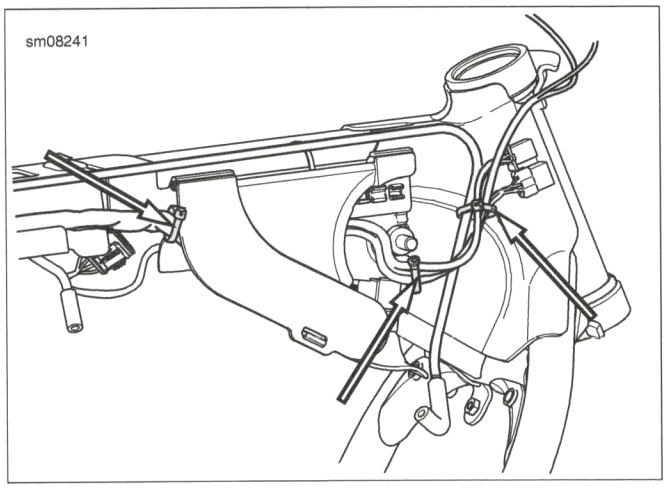

Figure 8-55. Backbone Caddy Cable Straps

COMPLETE

1. Install right side rider foot control assembly. See 3.34 RIDER FOOT CONTROLS.
2. Install fuel tank. See 6.5 FUEL TANK.
3. Install seat. See 3.36 SEAT.
4. Connect negative battery cable. See 8.4 POWER DISCONNECT.

⚠WARNING

Be sure that all lights and switches operate properly before operating motorcycle. Low visibility of rider can result in death or serious injury. (00316a)

5. Test all switches and lights for proper operation.

SUBJECT	PAGE NO.
A.1 BOSCH COMPACT 1.1M CONNECTORS	A-1
A.2 DELPHI GT 150 SEALED CONNECTORS	A-2
A.3 DEUTSCH DT SEALED CONNECTORS	A-4
A.4 FURUKAWA QLW SEALED CONNECTORS	A-8
A.5 MOLEX MX 150 SEALED CONNECTORS	A-9
A.6 SUMITOMO DL SEALED AND MT CONNECTORS	A-13
A.7 SUMITOMO MTW AND MTL UNSEALED CONNECTORS	A-14
A.8 TYCO 070 MULTILOCK UNSEALED CONNECTOR	A-15
A.9 TYCO GET 64 UNSEALED CONNECTORS	A-17
A.10 TYCO JUNIOR POWER TIMER UNSEALED CONNECTOR	A-19
A.11 TYCO SEALED TIMER CONNECTOR	A-20
A.12 TYCO SUPER SEAL 1.5 SEALED CONNECTOR	A-21
A.13 YAZAKI SSD SEALED CONNECTOR	A-22

NOTES

DISCONNECT AND CONNECT

Disconnect

1. Pull back the secondary lock.
2. Press the locking latch.
3. Pull the connector from the sensor.

Connect

1. Align the connector housings.
2. Press the housings together until the latch snaps into place.
3. Snap in the secondary lock.

REMOVE TERMINAL

PART NUMBER	TOOL NAME
GA500A	SNAP-ON TERMINAL PICK

1. See Figure A-1. Slide the locking bar off the terminal housing.
2. Insert the smallest pins of the SNAP-ON TERMINAL PICK (Part No. GA500A) into the gaps on each side of the socket to compress the tangs on each side of the terminal.
3. Gently pull on the wire to remove the terminal.

INSTALL TERMINAL

1. See Figure A-2. Bend the tangs on each side of the terminal outward.
2. Align terminal to the housing.
3. Install the terminal into housing. Terminal will snap into place.

NOTE

The teeth of the locking bar face down.

4. Install the locking bar onto the connector.

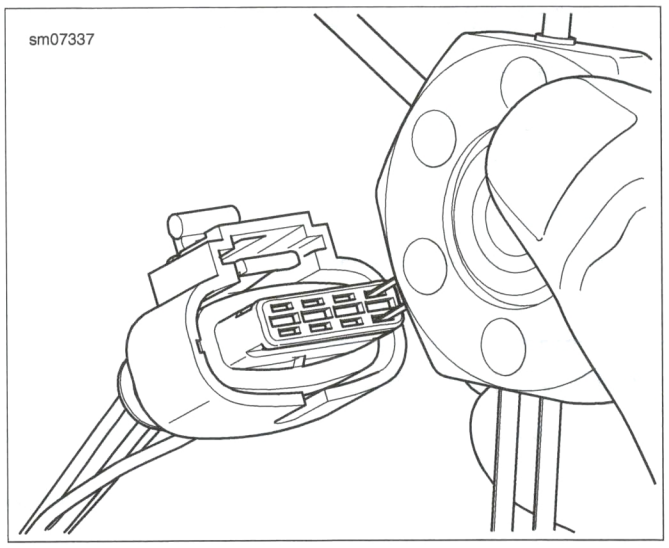

Figure A-1. Terminal Removal: Bosch Compact 1.1M Connector

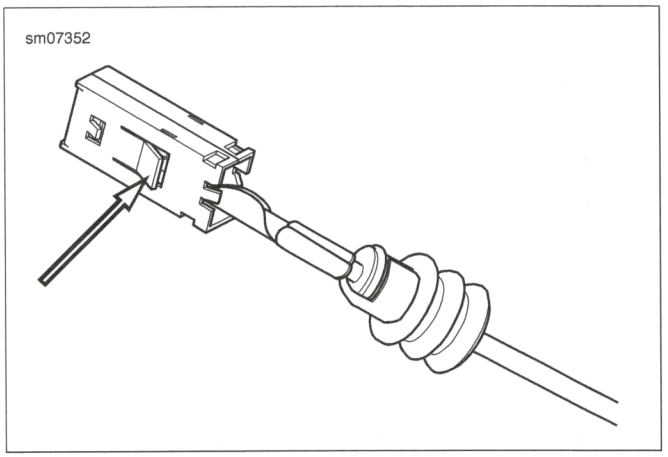

Figure A-2. Tangs: Bosch Compact 1.1M Socket Terminal

DISCONNECT AND CONNECT

Disconnect

1. See Figure A-3. Lift the external locking latch.
2. Pull the connector housings apart.

Connect

1. Align the connector housings.
2. Press the housings together until external latch(es) engage.

REMOVE TERMINAL

1. **Connectors with wire lock:** See Figure A-4. Remove the wires from wire lock.
   a. Pry loose one side of wire lock (1) from socket housing.
   b. Pry loose the other side, if necessary.
   c. Remove the wires from wire lock.
2. Remove terminal lock (2) from housing.

NOTE

Terminal will be difficult to remove if the tang is not released.

3. Pry tang (3) away from terminal. Pull on wire to back terminal out of chamber.

INSTALL TERMINAL

1. Push in tang on housing.
2. Push terminal into the cavity of the connector housing.
3. Gently pull wire to verify that terminal is secure.
4. Install colored terminal lock into housing.
5. **Connectors with wire lock:** Install wires in wire lock.
   a. Seat wires in separate channels of wire lock.
   b. Push channels inside chambers at wire end of housing until lock fully engages housing.

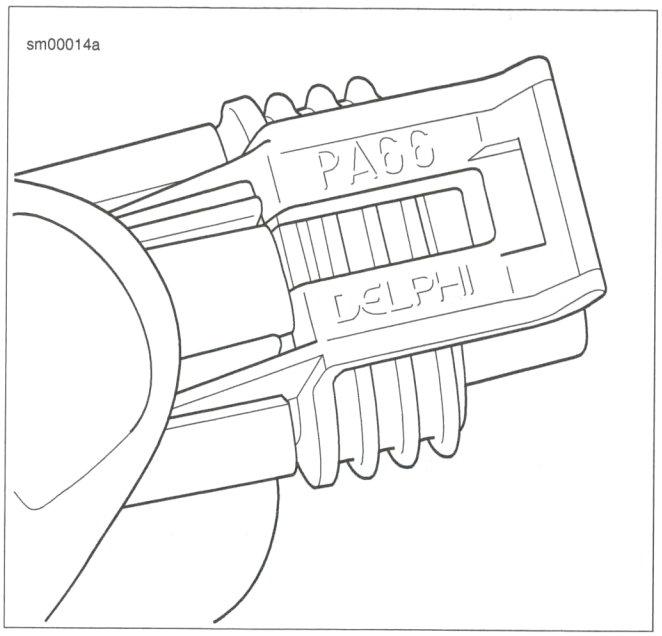

Figure A-3. Delphi GT 150 Sealed Connector: Socket Housing Latch

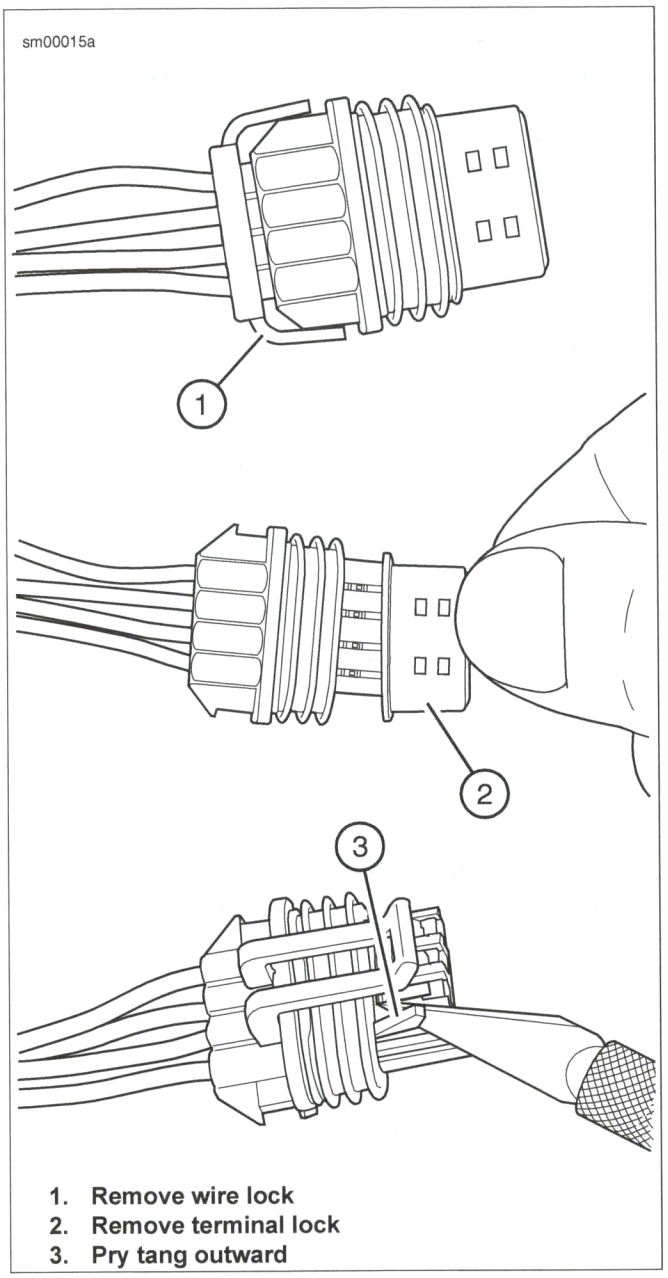

1. Remove wire lock
2. Remove terminal lock
3. Pry tang outward

Figure A-4. Delphi GT 150 Sealed Connector: Removing Socket Terminals

DISCONNECT AND CONNECT

PART NUMBER	TOOL NAME
HD-41475	DEUTSCH TERMINAL REPAIR KIT
HD-41475-100	FLAT BLADE L-HOOK

NOTES

- *A DEUTSCH TERMINAL REPAIR KIT (Part No. HD-41475) contains a selection of seals and seal plugs, locking wedges, attachment clips and terminals.*
- *Also included is a FLAT BLADE L-HOOK (Part No. HD-41475-100) used to remove locking wedges, compartmented storage box and carrying case.*

Disconnect

1. See Figure A-5. Press the latch(es) (1).
2. Pull the connector housings apart.

Connect

1. Align the connector housings.
2. Press the housings together until the latches snap into place.

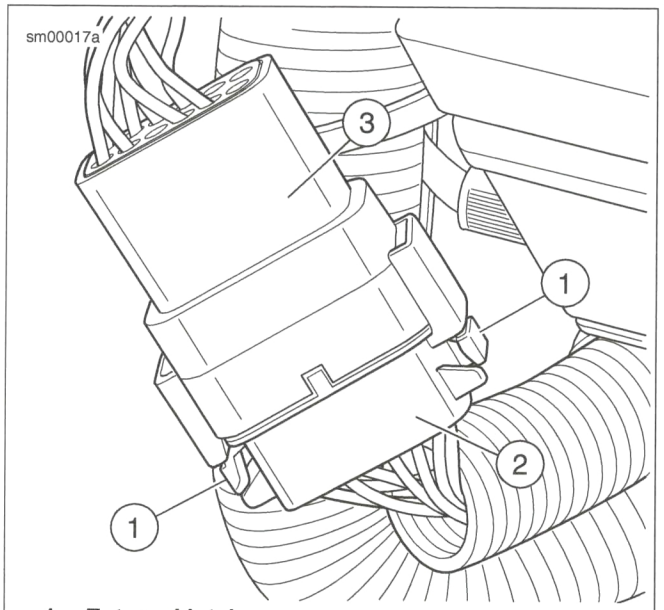

1. **External latch**
2. **Socket housing**
3. **Pin housing**

Figure A-5. Deutsch DT Sealed Connector

REMOVE TERMINAL

PART NUMBER	TOOL NAME
HD-41475-100	FLAT BLADE L-HOOK

1. **Socket terminals:** See Figure A-8. Pry the secondary locking wedge (5) out of the socket housing.

   Pin terminals: See Figure A-9. Use FLAT BLADE L-HOOK (Part No. HD-41475-100) or similar tool to pull the secondary locking wedge (4) from the pin housing.
2. See Figure A-7. Pry and hold the terminal latch away from the terminal.
3. Pull wire lead from housing.

INSTALL TERMINAL

1. See Figure A-8 or Figure A-9. Install rear wire seal (1) into housing (2), if removed.
2. Insert the terminal through the hole in wire seal and into the cavity. Terminal will snap into place.
3. Pull wire to confirm that terminal is properly seated.

NOTE

Install seal plugs (6) into unused chambers, if removed.

4. **Socket Housing:** See Figure A-8. Install internal seal (4) on lip of housing, if removed.

NOTES

- *See Figure A-6. **Three-place connectors:** Align arrow (1) on conical secondary lock towards external latch.*
- *If the secondary locking wedge does not install easily, check housing for unseated terminals.*

5. Install secondary lock. Lock will snap into place.

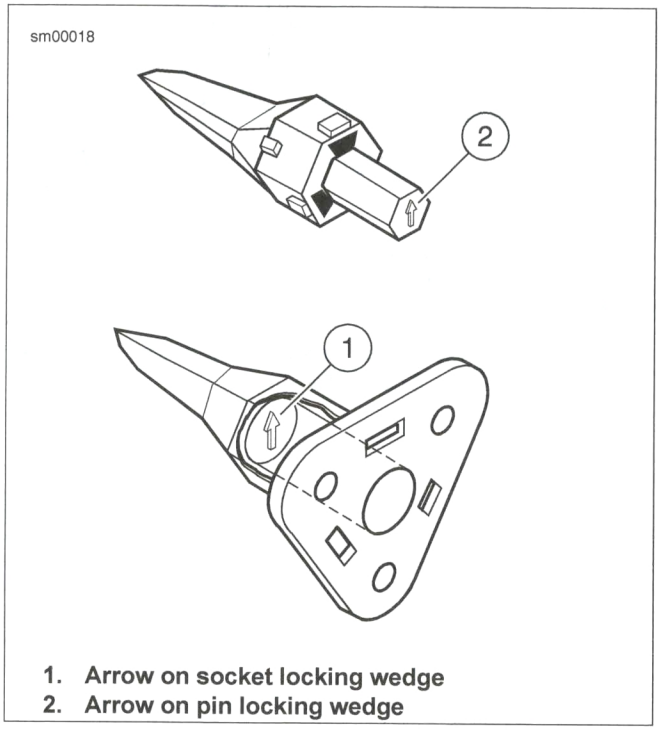

1. **Arrow on socket locking wedge**
2. **Arrow on pin locking wedge**

Figure A-6. Deutsch DT Sealed Connector: 3-Place Locking Wedges

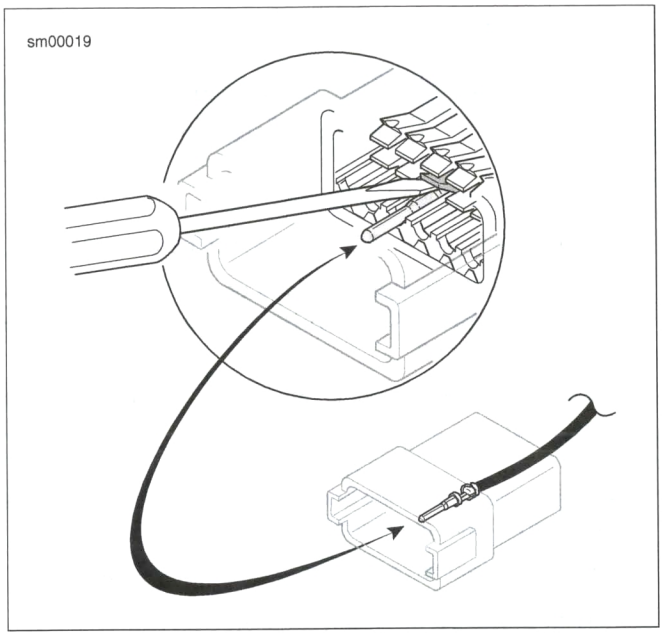

Figure A-7. Deutsch DT Sealed Connector: Press Terminal Latch and Pull Out Pin

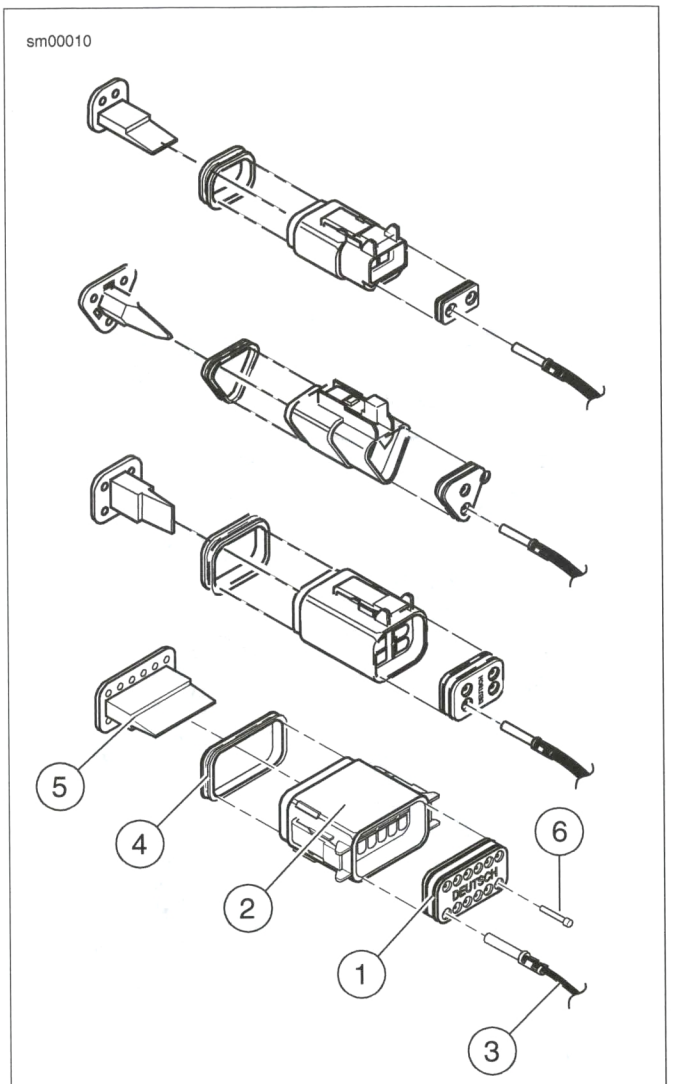

1. Wire seal
2. Socket housing
3. Wire lead
4. Internal seal
5. Secondary locking wedge
6. Seal plug

Figure A-8. Deutsch DT Sealed Connector: 2, 3, 4 and 12-Place Socket Housings

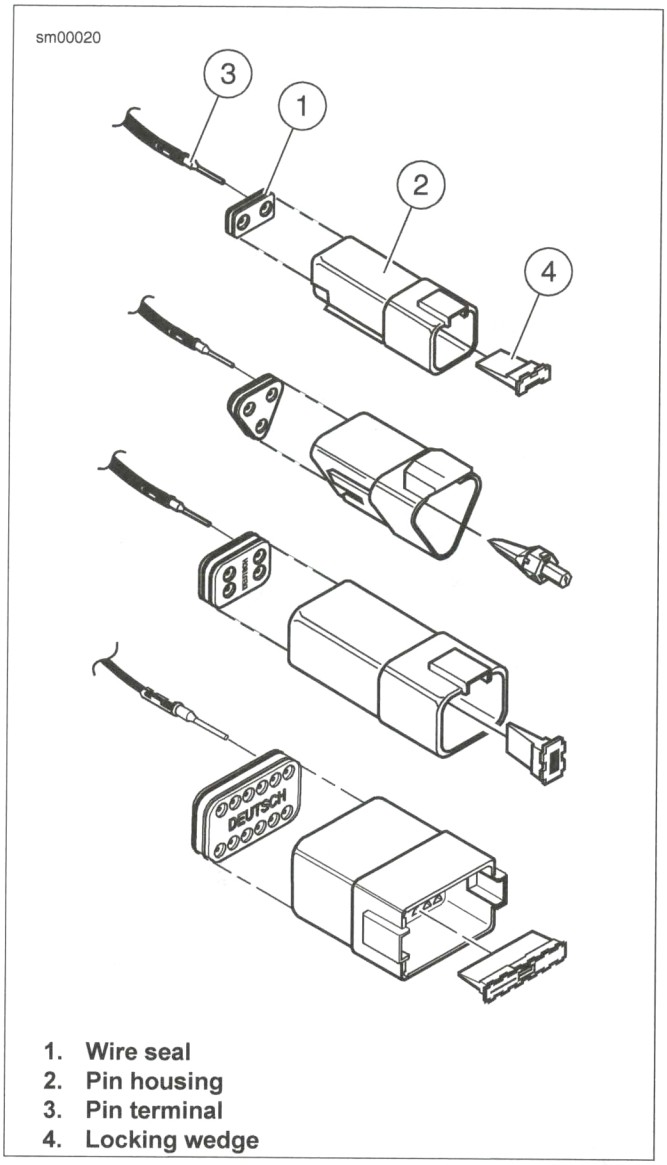

1. **Wire seal**
2. **Pin housing**
3. **Pin terminal**
4. **Locking wedge**

Figure A-9. Deutsch DT Sealed Connector: 2, 3, 4 and 12-Place Pin Housings

CRIMP TERMINAL

PART NUMBER	TOOL NAME
HD-39965-A	DEUTSCH TERMINAL CRIMP TOOL

1. Determine wire lead gauge.
2. Remove 4.0 mm (0.15 in) of insulation from the wire lead.
3. See Figure A-10. Open the jaws of the DEUTSCH TERMINAL CRIMP TOOL (Part No. HD-39965-A). Push the locking bar (1) up.
4. Match the wire gauge to the crimp tool die. Refer to Table A-1.

NOTE

Rest the rounded side of the contact barrel in the nest (concave split level area) with the crimp tails facing up.

5. Insert (2) terminal through hole of the locking bar.
6. Release locking bar to lock terminal in die.

NOTE

If the crimp tails are slightly out of alignment, the crimp tool rotates the terminal to face the tails up. When positioned, the locking bar fits in the space between the contact band and the core crimp tails.

7. Insert stripped wire core between crimp tails until ends make contact with locking bar. Position wire so that the wide pair of crimp tails squeeze bare wire strands, while the narrow pair folds over the insulation material.
8. Squeeze handle of crimp tool until tightly closed. Tool automatically opens after the terminal is crimped.
9. Raise locking bar up to remove wire lead and terminal.
10. Inspect the wire core and insulation crimps. Distortion should be minimal.

Table A-1. Deutsch DT Sealed Terminal Crimp: Wire Gauge To Die

WIRE GAUGE (AWG)	CRIMP TOOL DIE
20	Front
16-18	Middle

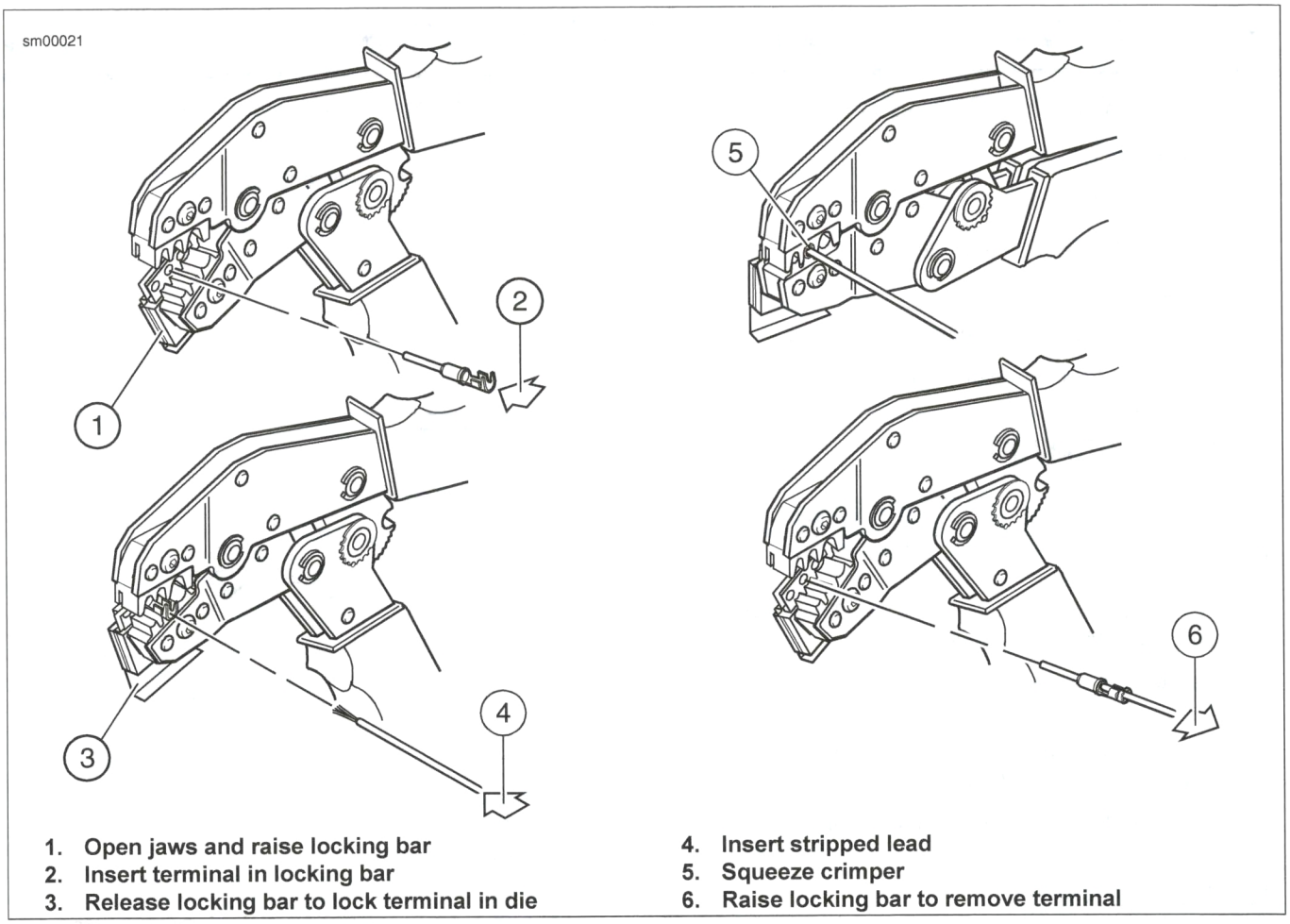

1. Open jaws and raise locking bar
2. Insert terminal in locking bar
3. Release locking bar to lock terminal in die
4. Insert stripped lead
5. Squeeze crimper
6. Raise locking bar to remove terminal

Figure A-10. Crimping a Deutsch DT Sealed Terminal

DISCONNECT AND CONNECT

Disconnect

1. Press the release button.
2. Pull the connector housings apart.

Connect

1. Align the connector housings.
2. Press the housings together until the locking tab snaps into place.

REMOVE TERMINAL

PART NUMBER	TOOL NAME
B-50085	TERMINAL EXTRACTOR

1. File the edge of a TERMINAL EXTRACTOR (Part No. B-50085) to a 45 degree angle.
2. See Figure A-11. Remove secondary lock (3) from housing (2).
3. Insert the extractor into the cavity next to the terminal. Press the plastic tang (4) away from the terminal (1).
4. Gently pull the wire to remove the terminal from the connector housing.

INSTALL TERMINAL

1. Align terminal to the housing.
2. Install the terminal into the housing. Terminal snaps into place.
3. Gently pull wire to verify terminals are locked.
4. Install secondary lock into connector.

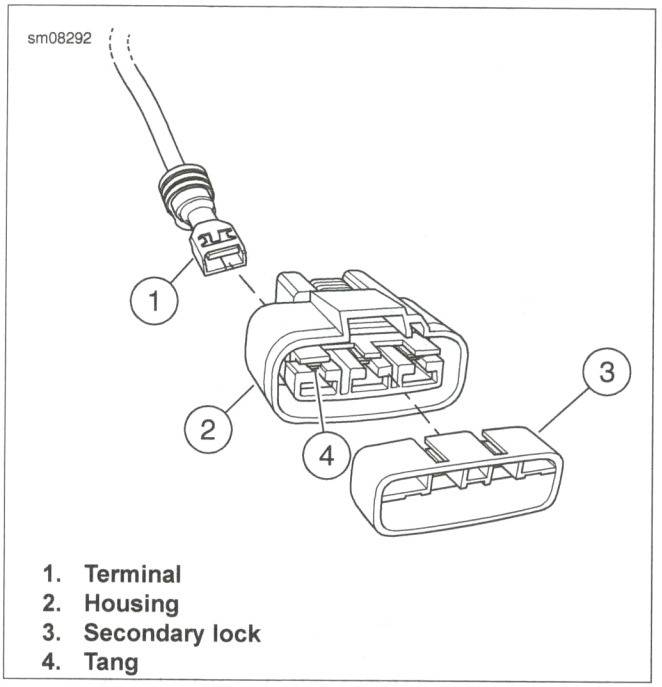

1. **Terminal**
2. **Housing**
3. **Secondary lock**
4. **Tang**

Figure A-11. Furukawa QLW Sealed Connector

DISCONNECT AND CONNECT

Disconnect

1. See Figure A-12. Press the latch.
2. Pull the connector housings apart.

Connect

1. Align the connector housings.
2. Press the housings together until the latch snaps into place.

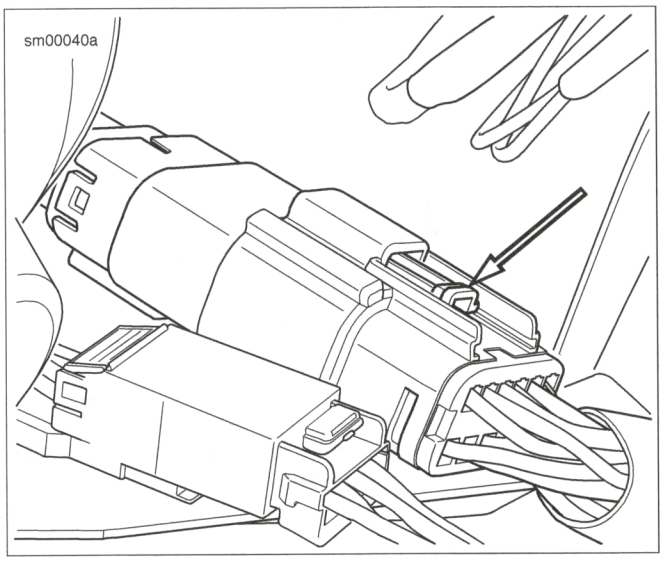

Figure A-12. Molex MX 150 Sealed Connector: Latch

REMOVE TERMINAL

PART NUMBER	TOOL NAME
HD-48114	TERMINAL REMOVER

1. Pull the secondary lock up, approximately 4.8 mm (0.2 in), until it stops.
   a. **Socket housing:** See Figure A-13. Use a small screwdriver in the pry slot. The slot next to the external latch provides a pivot point.
   b. **Pin housing:** See Figure A-14. Use needle nose pliers to engage the D-holes in the center of the secondary lock.

NOTE

Do not remove the secondary lock from the connector housing.

2. See Figure A-15. Insert TERMINAL REMOVER (Part No. HD-48114) into the pin hole next to the terminal until the tool bottoms.
   a. **Socket housing:** The pin holes are inside the terminal openings.
   b. **Pin housing:** The pin holes are outside the pins.
3. Remove terminal.
   a. Push terminal remover into pin hole.
   b. Gently pull on the wire to remove wire terminal from the chamber.

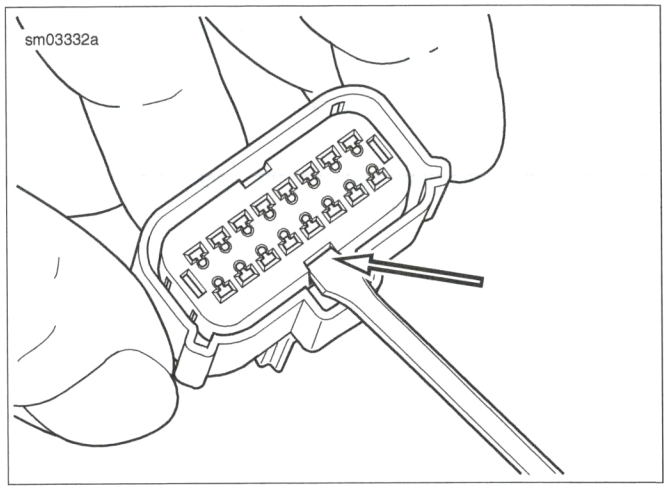

Figure A-13. Secondary Lock Pry Slot (Socket Housing)

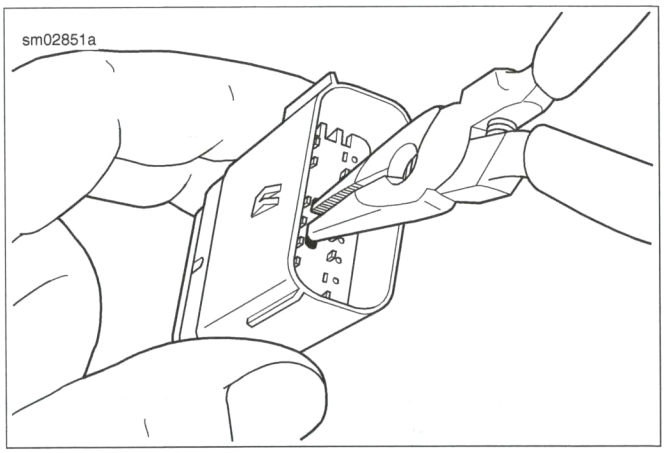

Figure A-14. Pull Up Secondary Lock

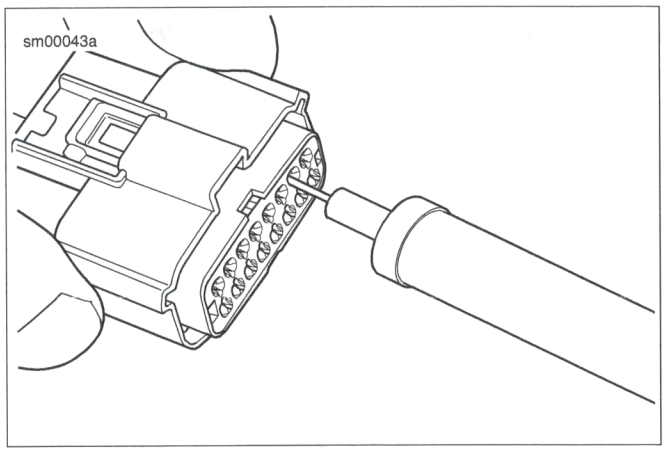

Figure A-15. Molex MX 150 Sealed Connector: Terminal Remover (HD-48114)

INSTALL TERMINAL

NOTE

See Figure A-16. Cavity numbers (1) are stamped on the housing at the ends of the cavity rows. Determine the cavity number by counting the cavities up or down along the row from each stamped number.

1. Align terminal to the housing.
2. See Figure A-16. Install the terminal into the housing. Tang (2) engages slot (3).
3. Gently pull on wire to verify that the terminal is captured by the secondary lock.
4. Push the secondary lock into the socket housing to lock the wire terminals into the housing.

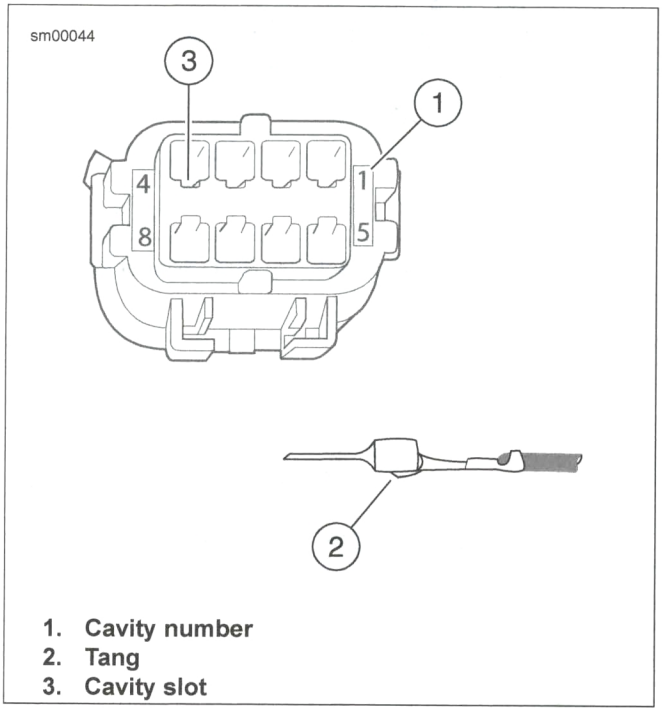

1. **Cavity number**
2. **Tang**
3. **Cavity slot**

Figure A-16. Molex MX 150 Sealed Connector: Pin Cavities and Wire Terminal

CRIMP TERMINAL

PART NUMBER	TOOL NAME
HD-48119	TERMINAL CRIMPER

1. Identify the punch/die in the jaws of the TERMINAL CRIMPER (Part No. HD-48119) for the wire gauge. Refer to Table A-2.
2. Open the tool.
3. See Figure A-17. Hold fully open tool at approximately 45 degrees.

NOTE

Do NOT tighten the locknut holding the locator bars. The bars must float to accommodate the different terminal gauges.

Table A-2. Crimp Tool Wire Gauge Punch/Die

AWG (WIRE GAUGE)	PUNCH/DIE
22	Left
18-20	Middle
14-16*	Right
* Crimp 16 AWG **pin** terminals in the 18-20 middle die.	

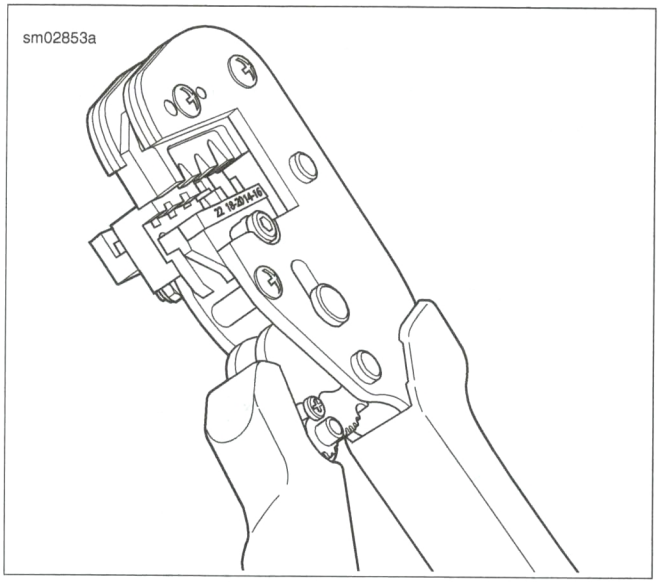

Figure A-17. Open Terminal Crimper (HD-48119) at 45 Degrees

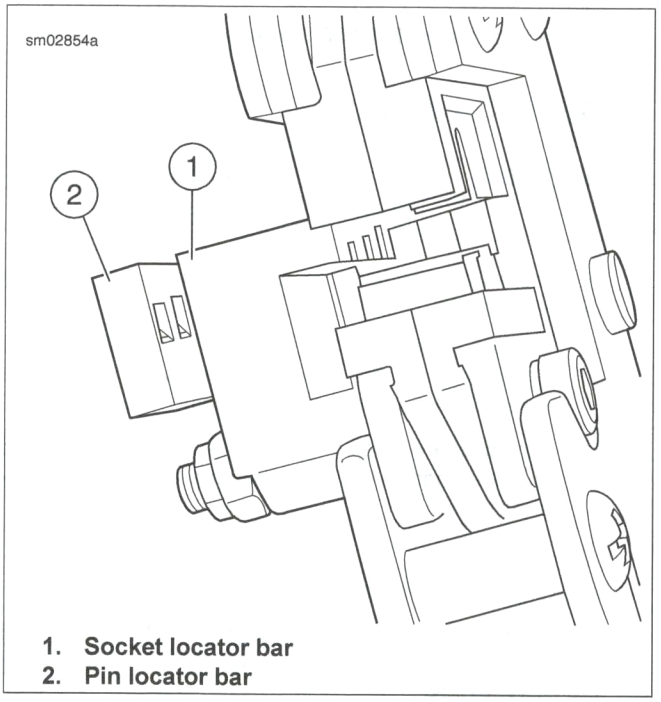

1. **Socket locator bar**
2. **Pin locator bar**

Figure A-18. Terminal Locator Bars

4. Remove 4.7-5.6 mm (0.2 in) of insulation from the wire lead.

5. See Figure A-19. With the crimp tails up, place the terminal through the punch/die into the square opening in the socket locator bar.
   a. **Socket terminal:** See Figure A-18. A socket terminal stops against the back face of the socket locator bar (1).
   b. **Pin terminal:** See Figure A-20. The tip of a pin terminal passes through the socket locator bar and stops in the notch in the face of the pin locator bar.
6. See Figure A-21. Ratchet the handles together until the crimp tails are held in vertical alignment between the punch and the die.

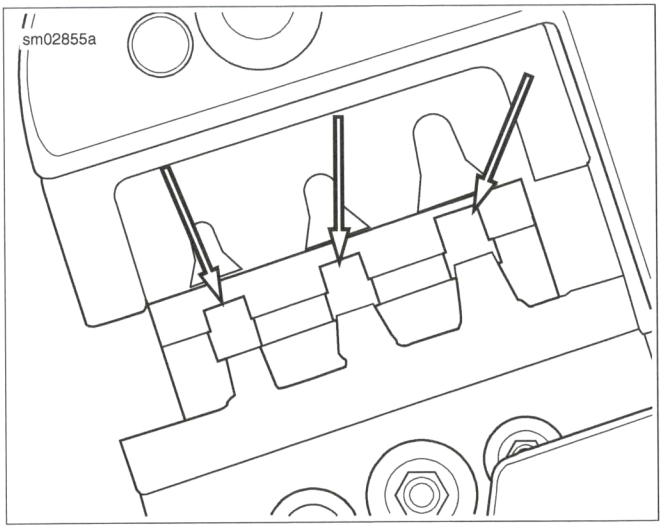

Figure A-19. Square Openings in Socket Locator Bar

See Figure A-22. Insert the wire lead between the crimp tails, angled up until the wire core touches the face of the socket locator bar above the square opening.

NOTES

- *The insulation must extend through the insulation crimp tails.*
- *Insert the wire with little or no pressure. Pressing on the lead will bend the wire core.*

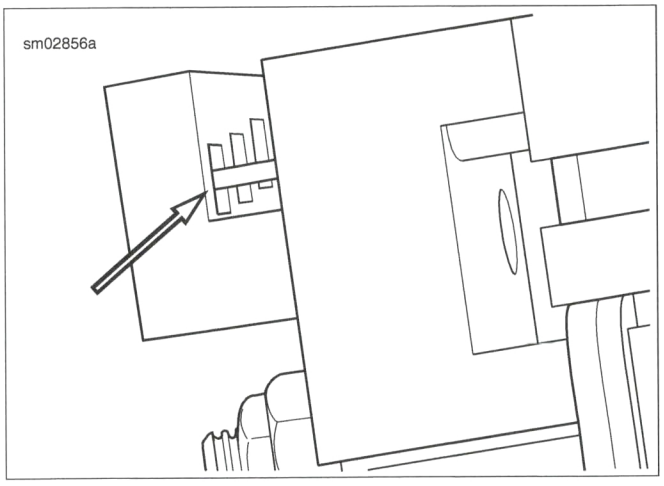

Figure A-20. Pin Terminal against Pin Locator Bar

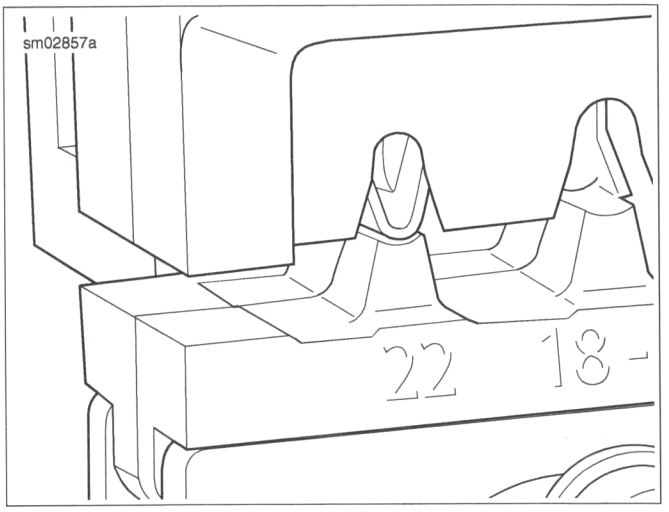

Figure A-21. Crimp Tails in Vertical Alignment between Punch and Die

7. Holding the wire lead in position touching the locator face at an angle, quickly and smoothly squeeze the crimp tool closed.
8. Squeeze the handles to open the tool and release the terminal.

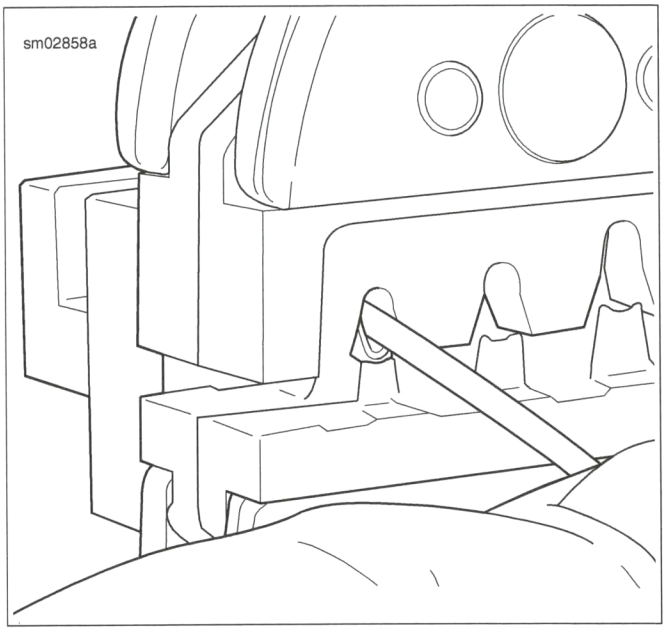

Figure A-22. Stripped Lead at Up Angle

1. **Inspect crimp:** Inspect the core and insulation crimp.
   a. See Figure A-23. The core tails should be creased into the wire strands at the core crimp (1).
   b. Wire strands (2) should extend beyond the core crimp but not into the terminal shell.
   c. The insulation tails should be folded into the insulation crimp (3) without piercing or cutting the insulation.
   d. Distortion should be minimal.
2. **Test crimp:** Hold the terminal. Pull the lead.

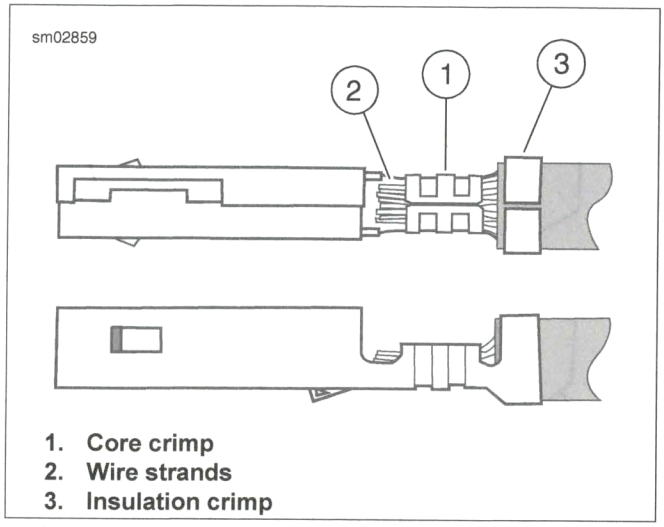

1. Core crimp
2. Wire strands
3. Insulation crimp

Figure A-23. Terminal Crimp

DISCONNECT AND CONNECT

Disconnect

1. Press the release button.
2. Pull the connector housings apart.

Connect

1. Align the connector housings.
2. Press the housings together until the lock clicks into place.

REMOVE TERMINAL

PART NUMBER	TOOL NAME
B-50085	TERMINAL EXTRACTOR

1. File the edge of a TERMINAL EXTRACTOR (Part No. B-50085) to a 45 degree angle.
2. **Sumitomo DL sealed connectors:** Pry secondary lock away from connector.
3. See Figure A-24. Remove terminal from housing.
   a. Insert the extractor into the cavity next to the terminal.
   b. Press and hold the plastic tang (1) away from the terminal (3).
   c. Gently pull the wire to remove the terminal from the connector housing (2).

INSTALL TERMINAL

1. Align terminal to the housing. Install the terminal into the housing. Terminal snaps into place.
2. Gently pull wire to verify terminals are locked.
3. **Sumitomo DL sealed connectors:** Install secondary lock into connector.

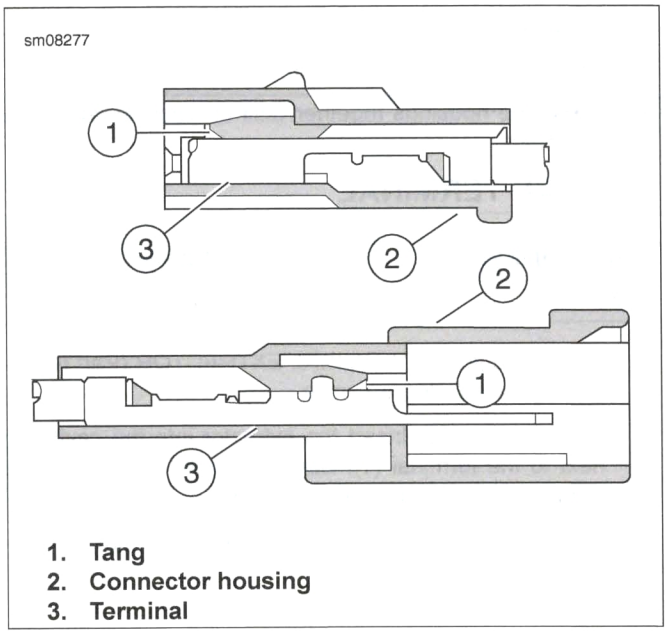

1. Tang
2. Connector housing
3. Terminal

Figure A-24. Sumitomo MT Unsealed Connector

SUMITOMO MTW AND MTL UNSEALED CONNECTORS

DISCONNECT AND CONNECT

Disconnect

1. Press the locking tab.
2. Pull the connector housings apart.

Connect

1. Align the connector housings.
2. Press the housings together until the locking tab snaps into place.

REMOVE TERMINAL

PART NUMBER	TOOL NAME
B-50085	TERMINAL EXTRACTOR

1. File the edge of a TERMINAL EXTRACTOR (Part No. B-50085) to a 45 degree angle.
2. See Figure A-25. Insert the extractor into the cavity (3) next to the terminal (1). Bend the metal tang (4) of the terminal flush with the terminal body.
3. Gently pull the wire to remove the terminal from the connector housing (2).

INSTALL TERMINAL

1. See Figure A-25. Bend metal tang (4) of terminal (1) up.
2. Align terminal to the housing. Install the terminal into the housing. Terminal will snap into place.
3. Gently pull wire to verify terminals are locked.

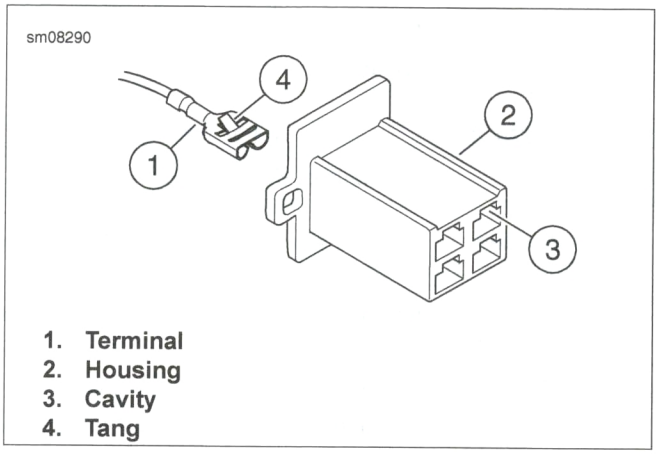

1. **Terminal**
2. **Housing**
3. **Cavity**
4. **Tang**

Figure A-25. Sumitomo MTW and MTL Unsealed Connector

DISCONNECT AND CONNECT

Disconnect

1. See Figure A-26. Press the release button (2).
2. Pull the connector housings apart.

Connect

1. Align the connector housings.
2. Press the housings together until the connector clicks.

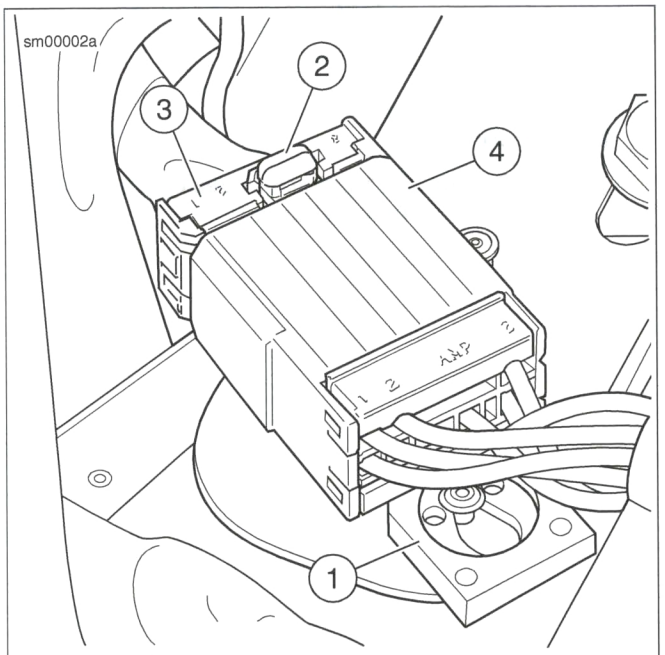

1. **Attachment clip**
2. **Release button**
3. **Socket housing**
4. **Pin housing**

Figure A-26. Tyco 070 Multilock Unsealed Connector

REMOVE TERMINAL

PART NUMBER	TOOL NAME
B-50085	TERMINAL EXTRACTOR

1. See Figure A-27. Open secondary lock.
   a. Lift latch (1) to free tab of secondary lock (2).
   b. Repeat on the opposite latch.
   c. Open the secondary lock.
2. Look in the terminal side of the connector (opposite the secondary lock). Note the cavity next to each terminal.

NOTE

When the tang is released, a click is heard.

3. Using TERMINAL EXTRACTOR (Part No. B-50085), press the tang (7 or 8) in the housing away from the terminal to release the terminal.
4. Gently pull on wire to remove terminal.

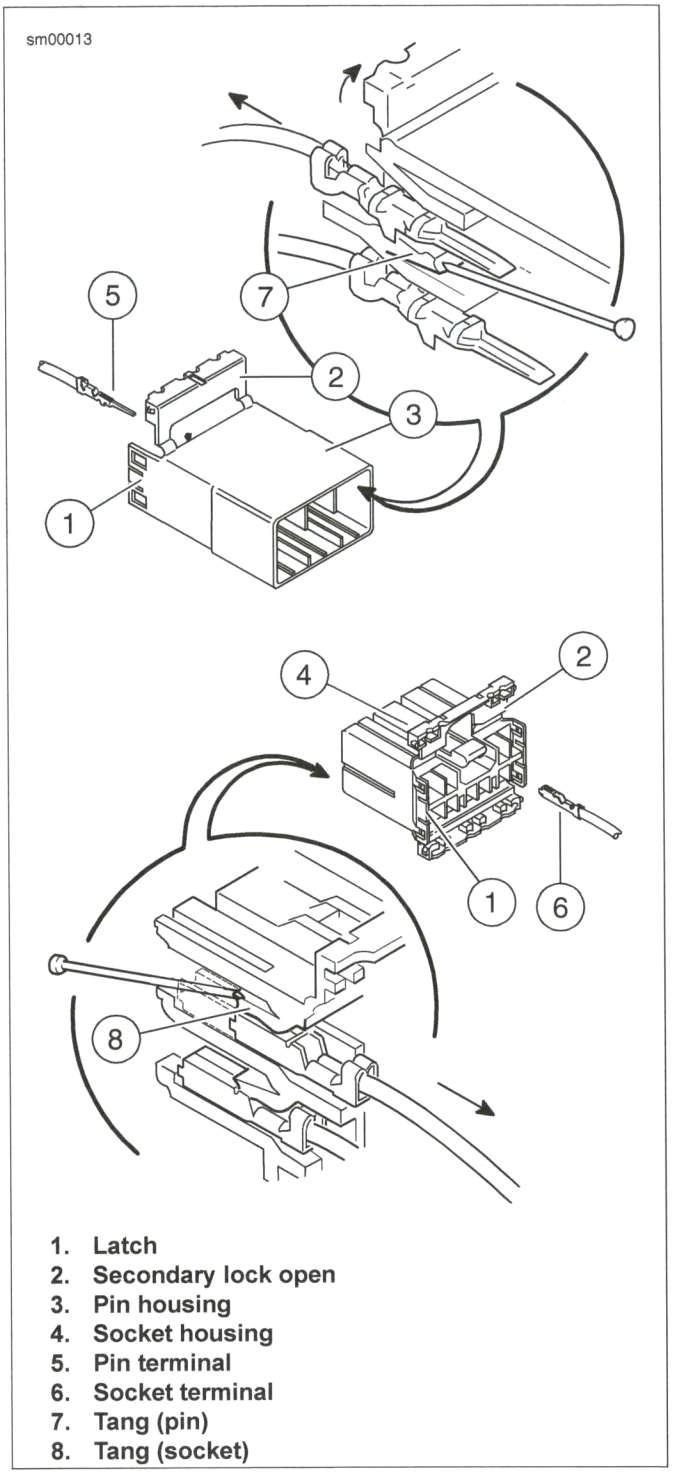

1. **Latch**
2. **Secondary lock open**
3. **Pin housing**
4. **Socket housing**
5. **Pin terminal**
6. **Socket terminal**
7. **Tang (pin)**
8. **Tang (socket)**

Figure A-27. Tyco 070 Multilock Unsealed Connector: Socket and Pin Housings

INSTALL TERMINAL

NOTE

Cavity numbers are stamped into the secondary locks of connector housings.

1. Align terminal to the housing. Install the terminal into housing. Terminal will snap into place.

NOTES

- *The release button is always on the top of the connector.*
- ***Pin housing:*** *Tangs are on the bottom of each cavity. The pin terminal slot (on the side opposite the crimp tails) must face the tang.*
- ***Socket housing:*** *Tangs are on the top of each cavity. The socket terminal slot (on the same side as the crimp tails) must face the tang.*

2. Gently pull wire to verify terminals are locked.
3. Close the secondary lock. When locked, the secondary lock tabs are engaged with connector latches.

CRIMP TERMINAL

PART NUMBER	TOOL NAME
HD-41609	AMP MULTI-LOCK CRIMPER

For the correct terminal crimping procedure, refer to the instruction sheet provided with the AMP MULTI-LOCK CRIMPER (Part No. HD-41609).

See Figure A-28. Inspect the wire core crimp (2) and insulation crimp (1). Distortion should be minimal.

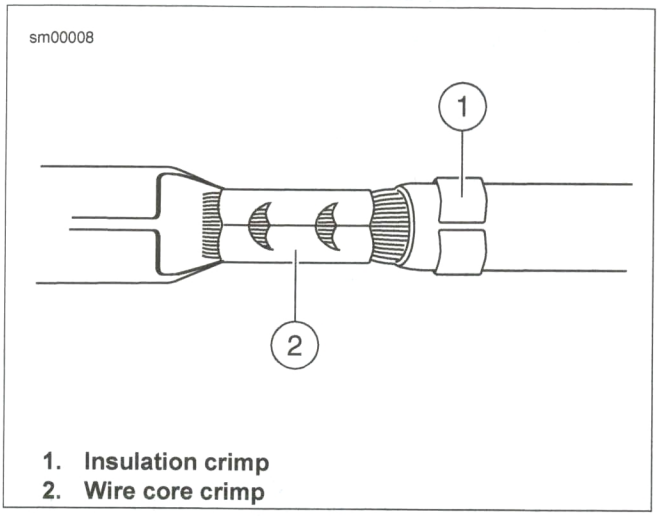

1. **Insulation crimp**
2. **Wire core crimp**

Figure A-28. Tyco 070 Multilock Unsealed Connector: Terminal Crimp

DISCONNECT AND CONNECT

Disconnect

1. See Figure A-29. Pull the latch lock open (1).
2. While pressing the latch (3), pull the connector housings apart.

Connect

1. Align the connector housings.
2. Press the housings together.
3. Push the latch lock closed (2).

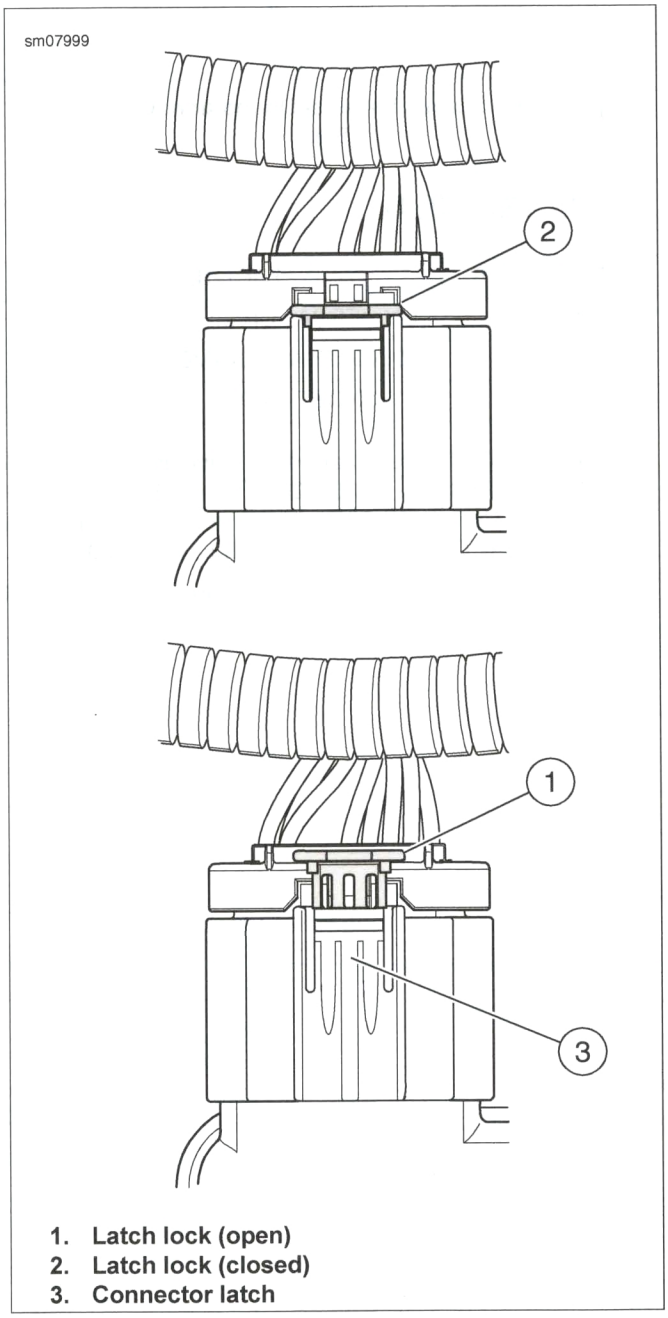

1. Latch lock (open)
2. Latch lock (closed)
3. Connector latch

Figure A-29. Tyco GET 64 Sealed Connector Latch and Lock

REMOVE TERMINAL

PART NUMBER	TOOL NAME
B-50085	TERMINAL EXTRACTOR

1. See Figure A-30. Remove secondary lock from the housing.
2. See Figure A-31. Insert TERMINAL EXTRACTOR (Part No. B-50085) into the cavity next to the terminal.
3. Pry and hold the plastic tang away from the terminal.
4. Pull on the wire lead to remove the terminal.

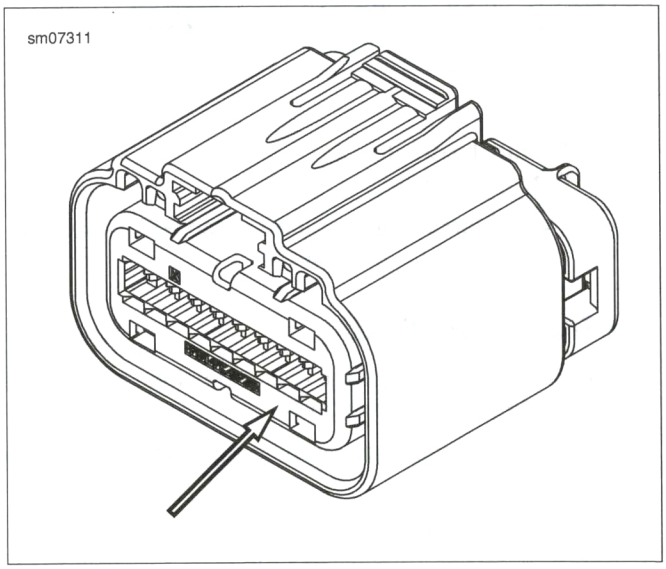

Figure A-30. Tyco GET 64 Secondary Lock

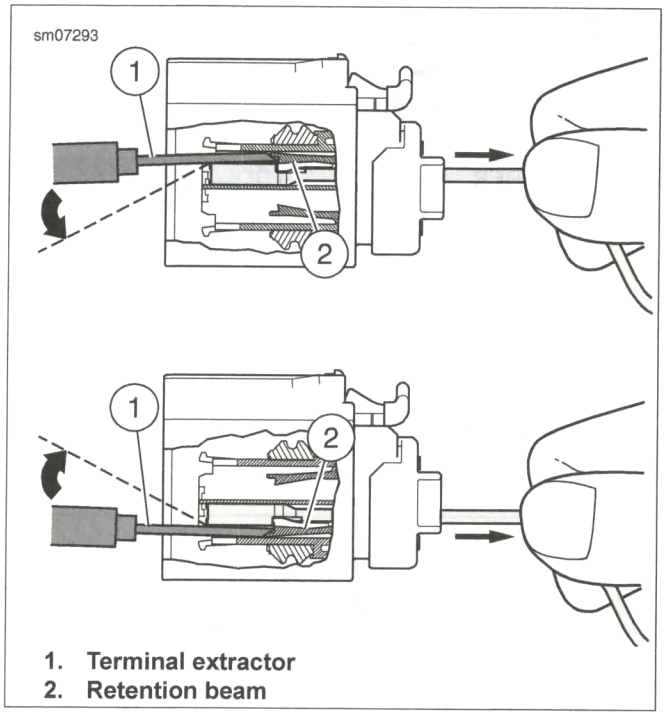

1. **Terminal extractor**
2. **Retention beam**

Figure A-31. Removing Terminals: Tyco GET 64 Sealed Connector

INSTALL TERMINAL

1. See Figure A-32. Align the open side of the crimp to the tang side of the housing cavity.
2. Install the terminal into the housing. Terminal will snap into place.
3. Install secondary lock into the housing.

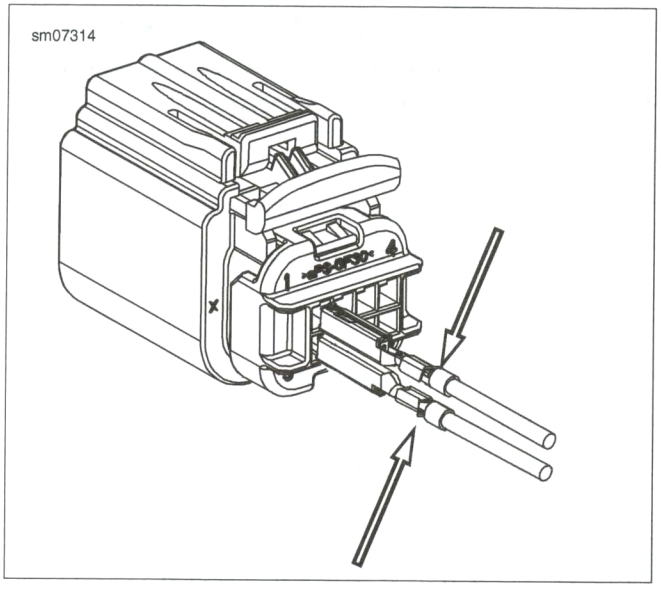

Figure A-32. Socket Terminal Orientation: Crimp Open Side

CRIMP TERMINAL

PART NUMBER	TOOL NAME
HD-50120	UNIVERSAL CRIMPER SET
HD-50120-2	HAND CRIMP FRAME
HD-50120-7	TYCO GET 64 DIE

Crimping Tyco GET 64 terminals requires the use of the TYCO GET 64 DIE (Part No. HD-50120-7) in the HAND CRIMP FRAME (Part No. HD-50120-2). These items are included in the UNIVERSAL CRIMPER SET (Part No. HD-50120).

For the correct terminal crimping procedure, refer to the tool instructions.

TYCO JUNIOR POWER TIMER UNSEALED CONNECTOR A.10

DISCONNECT AND CONNECT

Remove fuses to access the terminals, as necessary.

REMOVE TERMINAL

PART NUMBER	TOOL NAME
GA500A	SNAP-ON TERMINAL PICK

1. See Figure A-33. Insert smallest pair of pins on the SNAP-ON TERMINAL PICK (Part No. GA500A) into cavity on either side of terminal to press tangs on each side of terminal simultaneously.
2. Gently pull on wire to remove terminal from housing.

INSTALL TERMINAL

1. Bend tang on each side of terminal away from terminal body.
2. Install terminal into housing.
   a. Align terminal to the housing. The open side of the terminal should face the wire lead that it will be connected to by fuse.
   b. Install the terminal into housing until the terminal snaps into place.

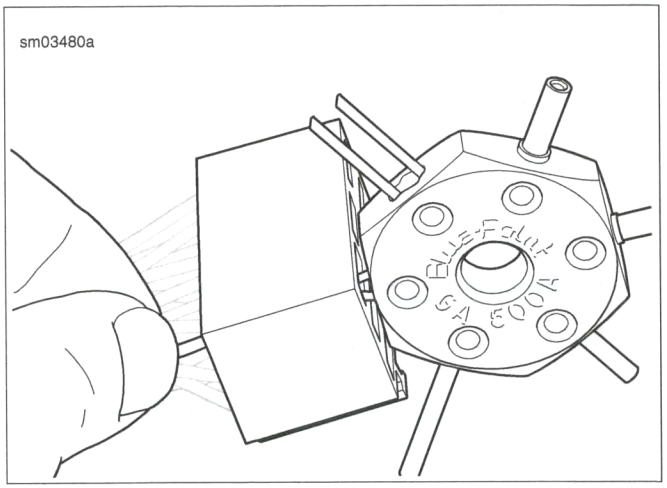

Figure A-33. Removing Autofuse Unsealed Terminal from Fuse Block

DISCONNECT AND CONNECT

Disconnect

1. See Figure A-34. Remove wire clip (1).
2. Pull the connector from the sensor.

Connect

1. Align the connector housings.
2. Press the housings together.
3. Install wire locking clip.

REMOVE TERMINAL

PART NUMBER	TOOL NAME
GA500A	SNAP-ON TERMINAL PICK

1. See Figure A-34. Remove sealing boot (2) from housing (5).
2. Insert the smallest pins of the SNAP-ON TERMINAL PICK (Part No. GA500A) into the cavities (3) on each side of the terminal to compress the tangs (6) on each side of the terminal (4).
3. Gently pull on the wire to remove the terminal.

INSTALL TERMINAL

1. See Figure A-34. Bend the tangs (6) on each side of the terminal outward.
2. Align terminal (4) to the housing (5). Install the terminal into housing. Terminal will snap into place.

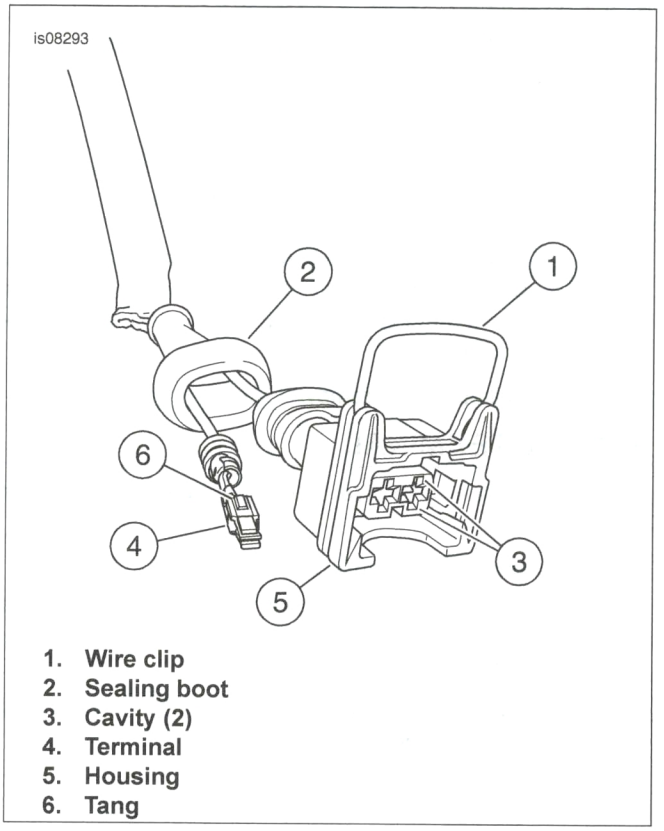

1. **Wire clip**
2. **Sealing boot**
3. **Cavity (2)**
4. **Terminal**
5. **Housing**
6. **Tang**

Figure A-34. Tyco Sealed Timer Connector

DISCONNECT AND CONNECT

Disconnect

1. Lift locking tab.
2. Pull the connector housings apart.

Connect

1. Align housings.
2. Press connector housings together until the locking tab clicks.

REMOVE TERMINAL

PART NUMBER	TOOL NAME
B-50085	TERMINAL EXTRACTOR

1. File the edge of a TERMINAL EXTRACTOR (Part No. B-50085) to a 45 degree angle.
2. **Male connector:** See Figure A-35. Remove seal (4) from connector housing (2).
3. Lift locking tab on either side of housing and remove secondary lock (3) from connector housing (2).
4. See Figure A-35. Insert the extractor into the cavity next to the terminal. Press the plastic tang away from the terminal.
5. Gently pull the wire to remove the terminal from the connector housing (2).

INSTALL TERMINAL

1. Align terminal to the housing. Install the terminal into the housing. Terminal snaps into place.
2. Gently pull wire to verify terminals are locked.
3. See Figure A-35. Install secondary lock (4) into connector housing (2).
4. **Male connector:** Install seal (4).

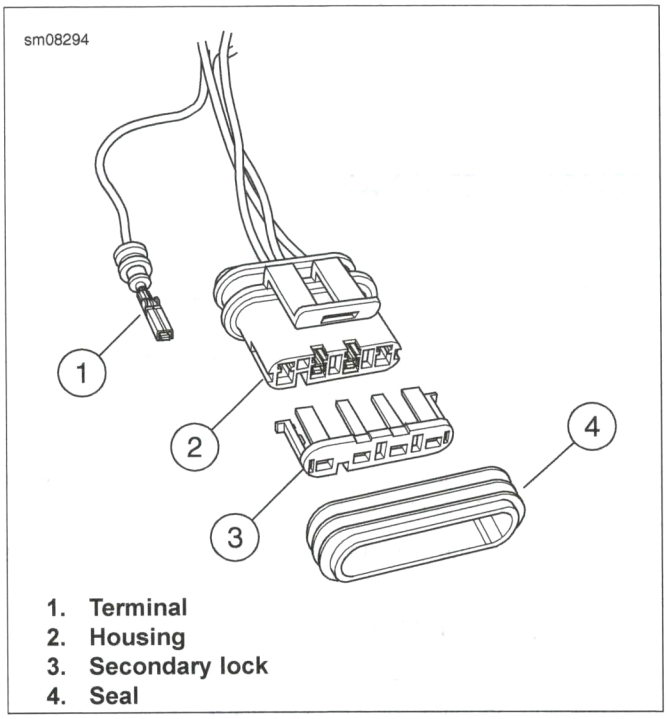

1. **Terminal**
2. **Housing**
3. **Secondary lock**
4. **Seal**

Figure A-35. Tyco Super Seal 1.5 Sealed Connector

DISCONNECT AND CONNECT

Disconnect

1. Press the release button.
2. Pull the connector housings apart.

Connect

1. Align the connector housings.
2. Press the housings together until the lock clicks into place.

REMOVE TERMINAL

PART NUMBER	TOOL NAME
B-50085	TERMINAL EXTRACTOR

1. File the edge of a TERMINAL EXTRACTOR (Part No. B-50085) to a 45 degree angle.
2. See Figure A-36. Pry secondary lock (1) from housing (3).
3. Insert the extractor into the cavity (4) next to the terminal (2). Press the plastic tang away from the terminal.
4. Gently pull the wire to remove the terminal from the housing.

INSTALL TERMINAL

1. Align terminal to the housing. Install the terminal into the housing. Terminal will snap into place.
2. Gently pull wire to verify terminals are locked.
3. See Figure A-36. Install secondary lock into connector (1).

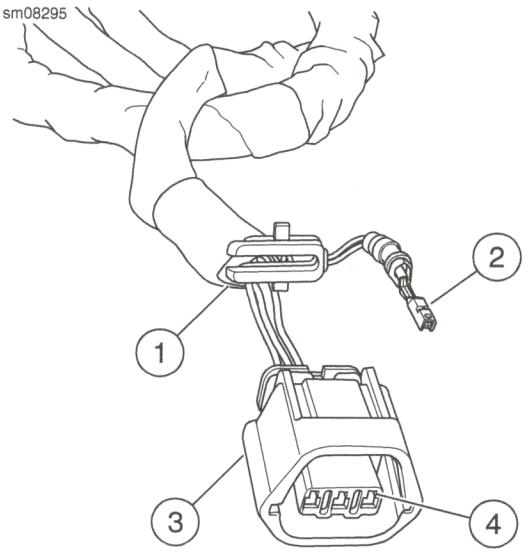

1. **Secondary lock**
2. **Terminal**
3. **Housing**
4. **Cavity**

Figure A-36. Yazaki SSD Sealed Connector

SUBJECT	PAGE NO.
B.1 COMPONENT LOCATION VIEWS	B-1
B.2 WIRING DIAGRAM INFORMATION	B-4
B.3 CONNECTORS	B-15

NOTES

COMPONENT LOCATIONS

Some components and connectors are not easily located on the motorcycle. The following graphics show locations for these components and connectors. The graphics are generally ordered from front to back around the motorcycle.

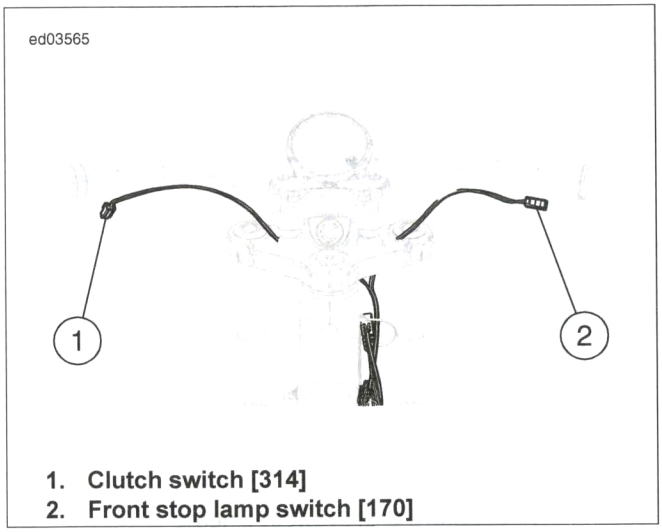

1. Clutch switch [314]
2. Front stop lamp switch [170]

Figure B-1. Hand Controls

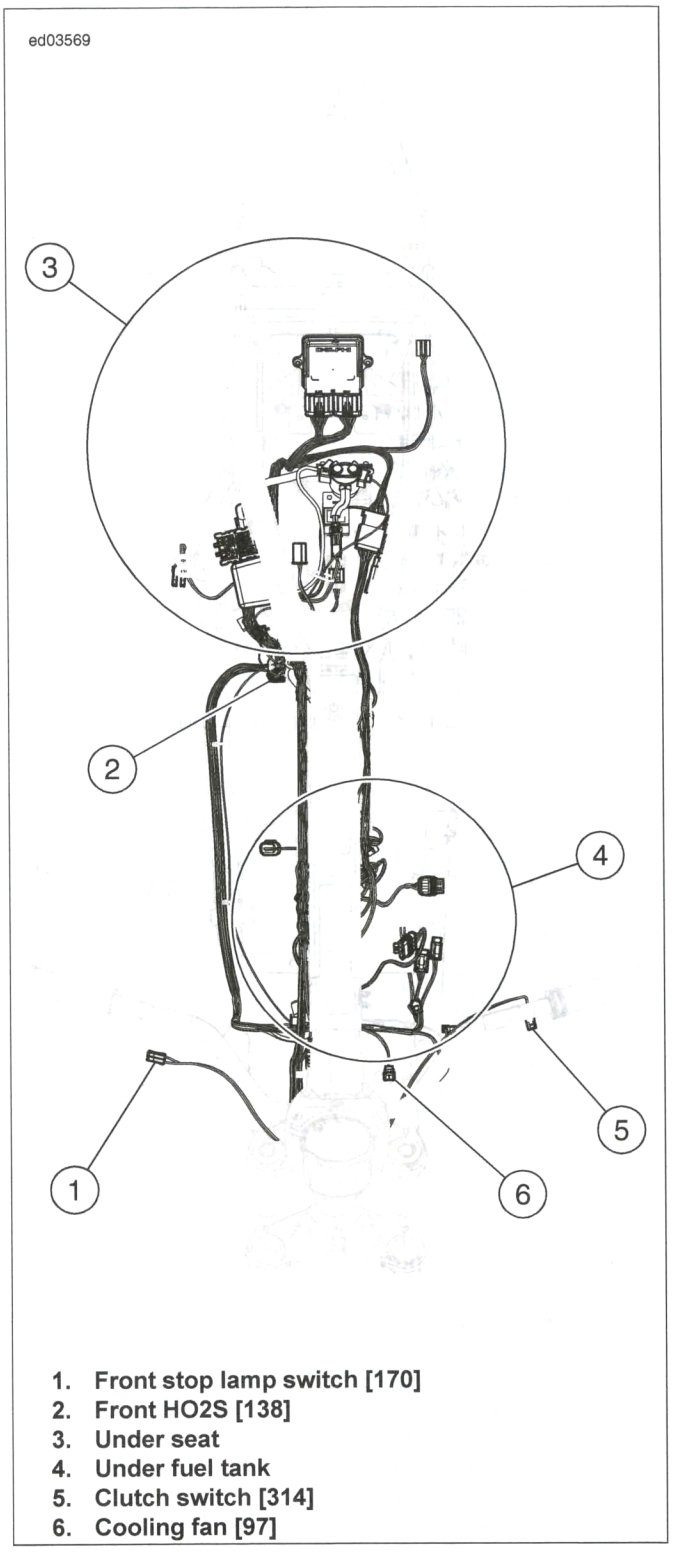

1. Front stop lamp switch [170]
2. Front HO2S [138]
3. Under seat
4. Under fuel tank
5. Clutch switch [314]
6. Cooling fan [97]

Figure B-2. Frame Top View

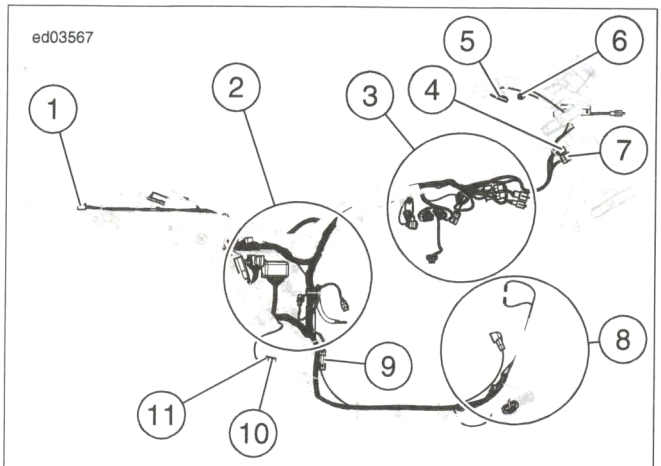

1. Rear lighting [7]
2. Behind right cover
3. Under fuel tank
4. Speedometer [39]
5. Clutch switch [314]
6. Front stop lamp switch [170]
7. Indicator lamps [21]
8. Front of engine
9. Front HO2S [138]
10. Rear stop lamp switch [121-1]
11. Rear stop lamp switch [121-2]

Figure B-3. Frame Right Side

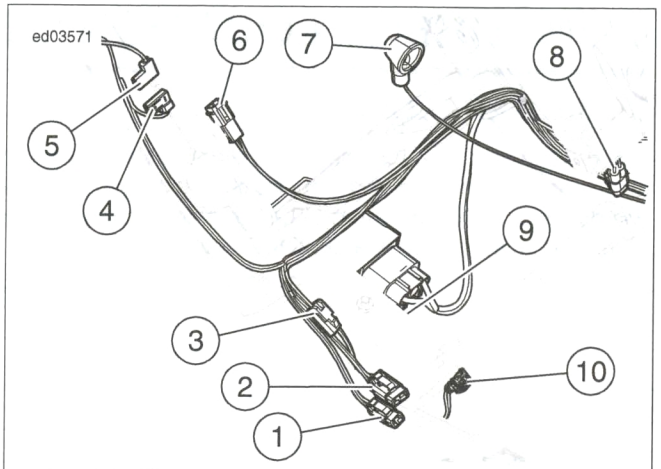

1. JSS [133]
2. Neutral switch [131]
3. CKP [79]
4. Horn [122-1]
5. Horn [122-2]
6. Cooling fan [97]
7. Starter
8. VSS [65]
9. Voltage regulator [77]
10. Oil pressure switch [120]

Figure B-5. Front of Engine

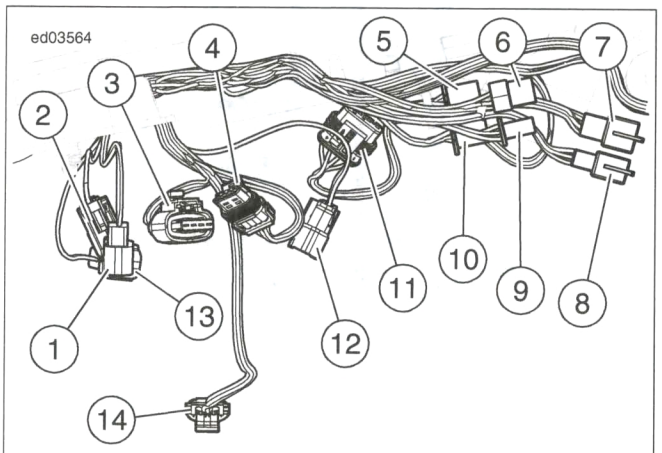

1. Rear injector [85]
2. TPS [88]
3. TMAP [80]
4. IAC [87]
5. Left front turn lamp [31L]
6. Headlamp [38]
7. LH controls [24]
8. RH controls [22]
9. Ignition switch [33]
10. Right front turn lamp [31R]
11. Fuel pump [141]
12. Front injector [84]
13. ECT [90]
14. Ignition coil [83]

Figure B-4. Under Fuel Tank

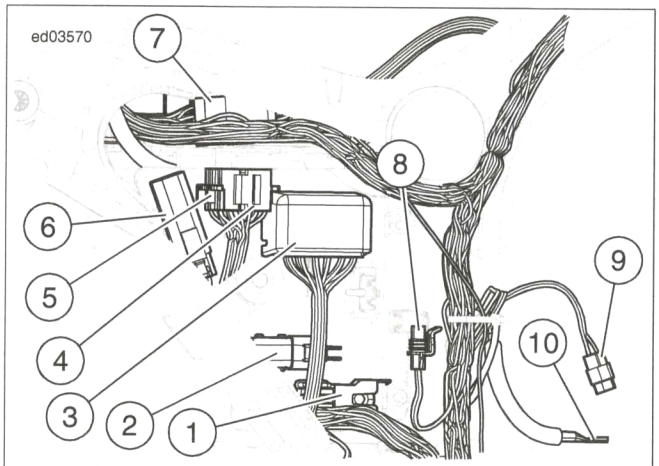

1. Main fuse [5]
2. DLC [91]
3. Fuse block [64]
4. Relay block 1
5. Relay block 2
6. Diode pack [201]
7. Engine harness [145]
8. Purge solenoid [95]
9. VSS [65]
10. Ground

Figure B-6. Under Right Side Cover

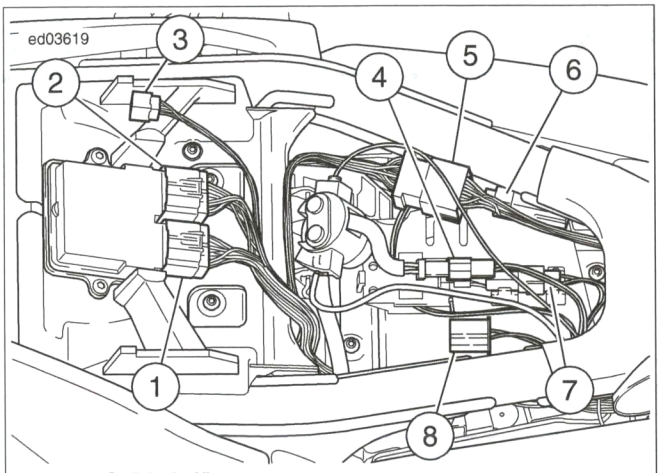

1. ECM [78-1]
2. ECM [78-2]
3. Rear lighting [7]
4. Starter solenoid [128]
5. Engine harness [145]
6. Rear HO2S [137]
7. BAS [134]
8. Flasher [30]

Figure B-7. Under Seat: Front

WIRING DIAGRAM INFORMATION

Wire Color Codes

Wire traces on wiring diagrams are labeled with alpha codes. Refer to Table B-1.

For Solid Color Wires: See Figure B-8. The alpha code identifies wire color.

For Striped Wires: The code is written with a slash (/) between the solid color code and the stripe code. For example, a trace labeled GN/Y is a green wire with a yellow stripe.

Wiring Diagram Symbols

See Figure B-8. On wiring diagrams and in service/repair instructions, connectors are identified by a number in brackets [ ]. The letter inside the brackets identifies whether the housing is a socket or pin housing.

A=Pin: The letter A and the pin symbol after a connector number identifies the pin side of the terminal connectors.

B=Socket: The letter B and the socket symbol after a connector number identifies the socket side of the terminal connectors. Other symbols found on the wiring diagrams include the following:

Diode: The diode allows current flow in one direction only in a circuit.

Wire break: The wire breaks are used to show option variances or page breaks.

No Connection: Two wires crossing over each other in a wiring diagram that are shown with no splice indicating they are not connected together.

Circuit to/from: This symbol indicates a more complete circuit diagram on another page. The symbol is also identifying the direction of current flow.

Splice: Splices are where two or more wires are connected together along a wiring diagram. The indication of a splice only indicates that wires are spliced to that circuit. It is not the true location of the splice in the wiring harness.

Ground: Grounds can be classified as either clean or dirty grounds. Clean grounds are identified by a (BK/GN) wire and are normally used for sensors or modules.

NOTE

Clean grounds usually do not have electric motors, coils or anything that may cause electrical interference on the ground circuit.

Dirty grounds are identified by a (BK) wire and are used for components that are not as sensitive to electrical interference.

Twisted pair: This symbol indicates the two wires are twisted together in the harness. This minimizes the circuit's electromagnetic interference from external sources. If repairs are necessary to these wires they should remain as twisted wires.

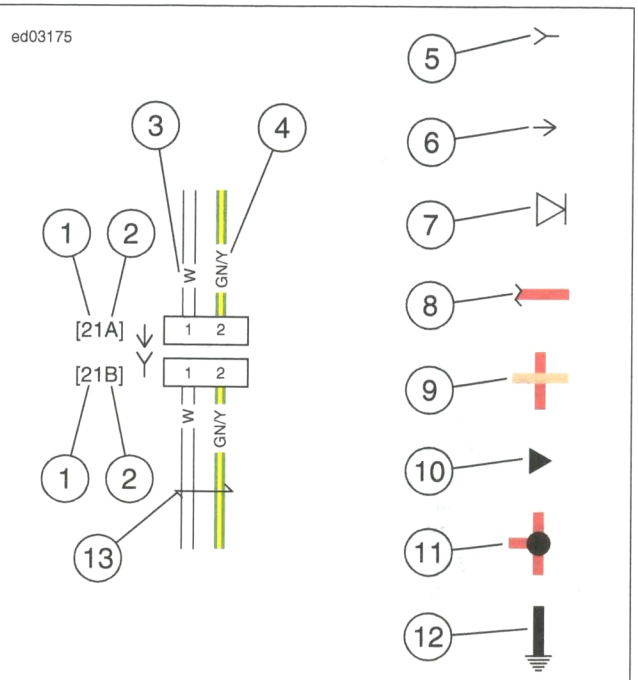

1. **Connector number**
2. **Terminal code (A=pin, B=socket)**
3. **Solid wire color**
4. **Striped wire color**
5. **Socket symbol**
6. **Pin symbol**
7. **Diode**
8. **Wire break**
9. **No connection**
10. **Circuit to/from**
11. **Splice**
12. **Ground**
13. **Twisted pair**

Figure B-8. Connector/Wiring Diagram Symbols

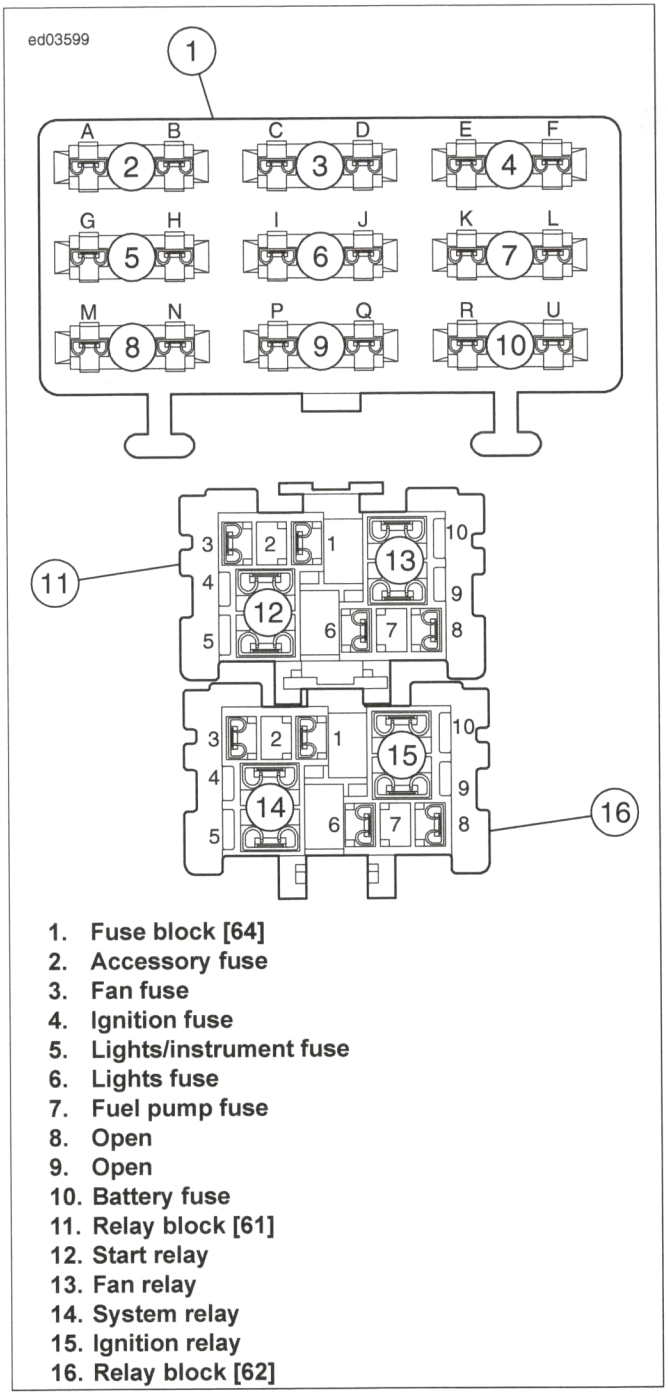

1. Fuse block [64]
2. Accessory fuse
3. Fan fuse
4. Ignition fuse
5. Lights/instrument fuse
6. Lights fuse
7. Fuel pump fuse
8. Open
9. Open
10. Battery fuse
11. Relay block [61]
12. Start relay
13. Fan relay
14. System relay
15. Ignition relay
16. Relay block [62]

Figure B-9. Fuse Block and Socket Terminals

Table B-1. Wire Color Codes

ALPHA CODE	WIRE COLOR
BE	Blue
BK	Black
BN	Brown
GN	Green
GY	Gray
LGN	Light Green
O	Orange
PK	Pink
R	Red
TN	Tan
V	Violet
W	White
Y	Yellow

Refer to the table below for wiring diagram information.

Wiring Diagram List

DIAGRAM	LOCATION
IGN and ACC	Figure B-10
Grounds	Figure B-11
Lighting and Hand Controls: 2015 Street	Figure B-12
Main Harness (1 of 2): 2015 Street	Figure B-13
Main Harness (2 of 2): 2015 Street	Figure B-14

em01505

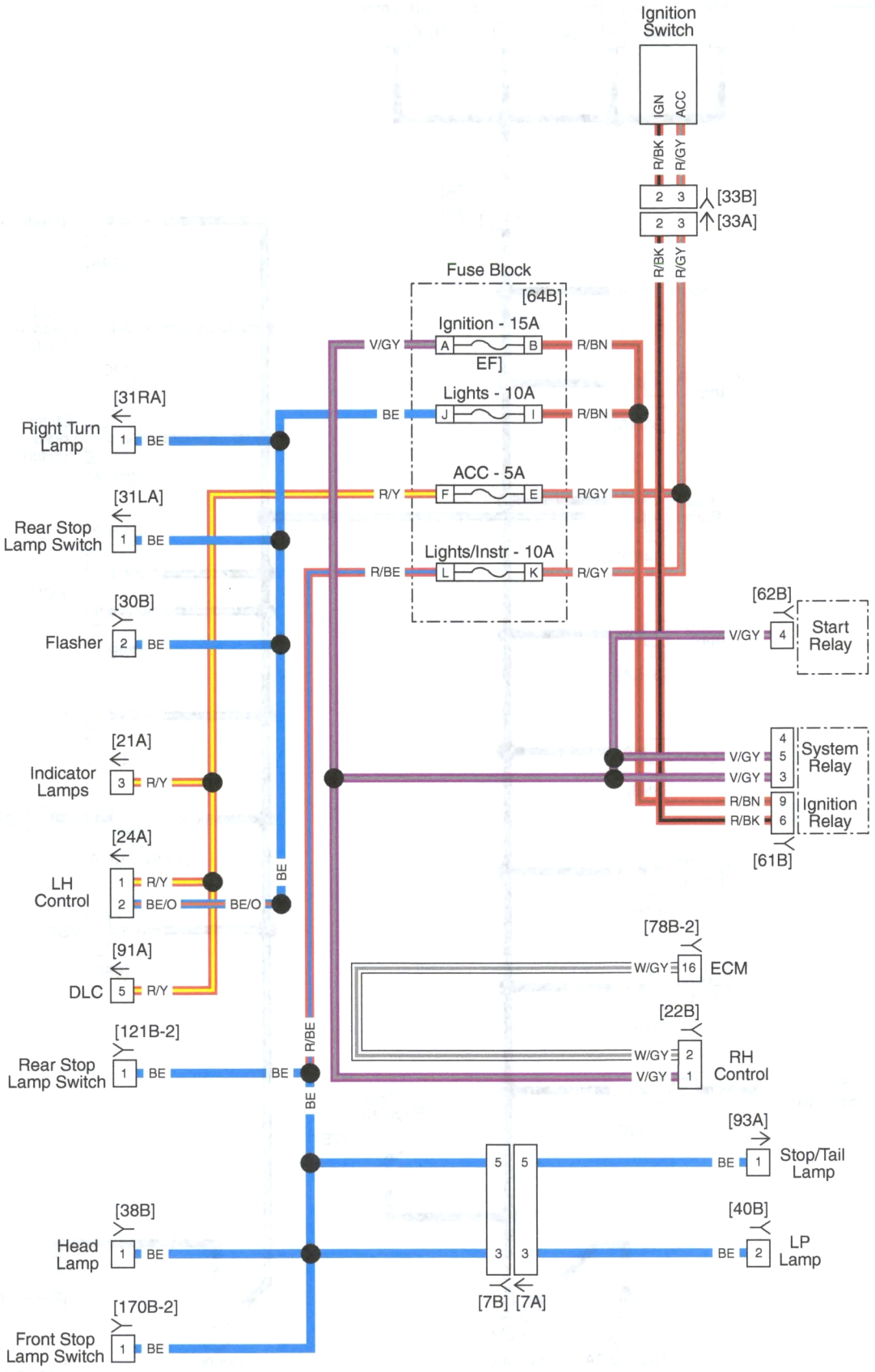

Figure B-10. IGN and ACC

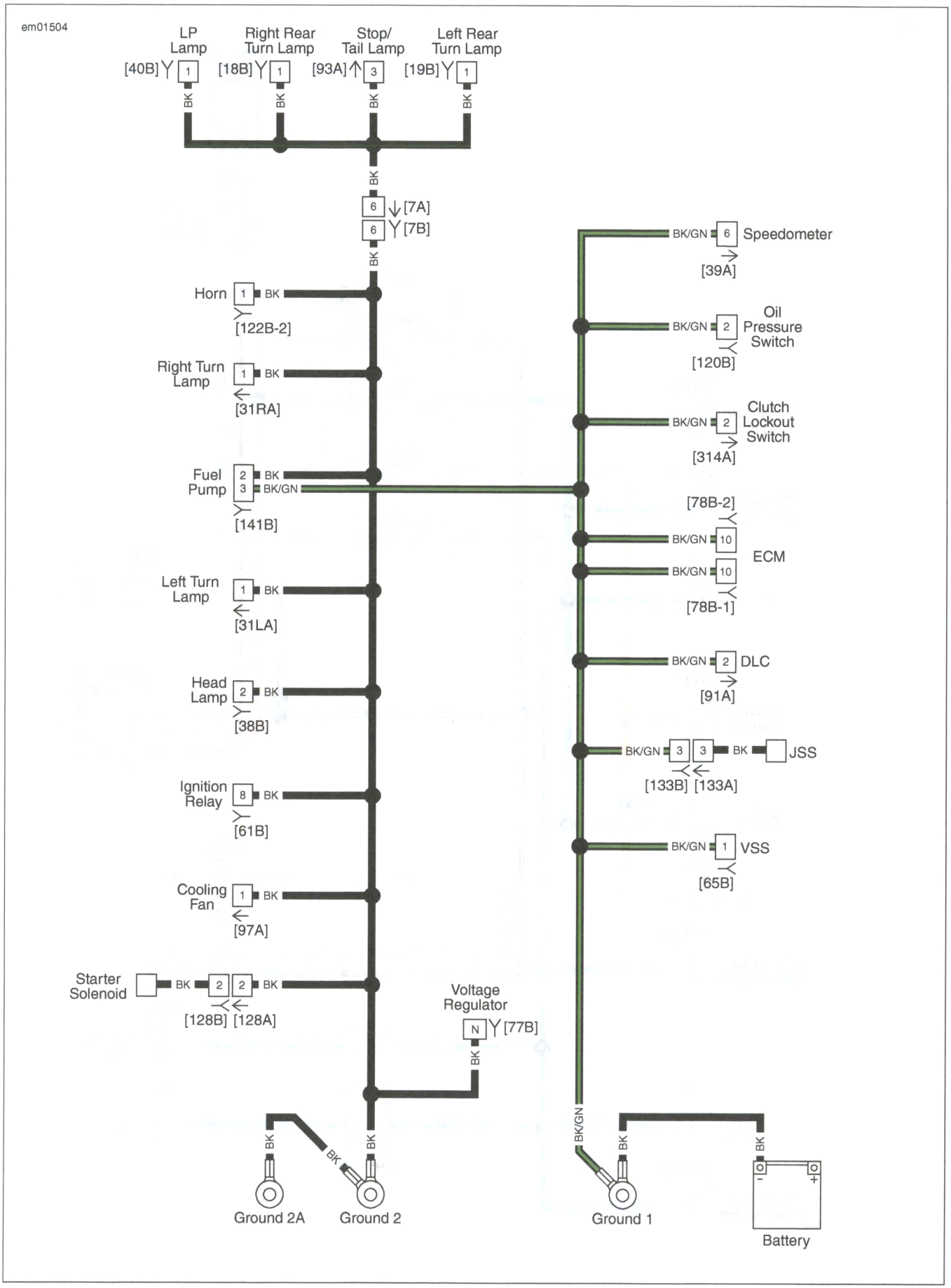

Figure B-11. Grounds

et00584

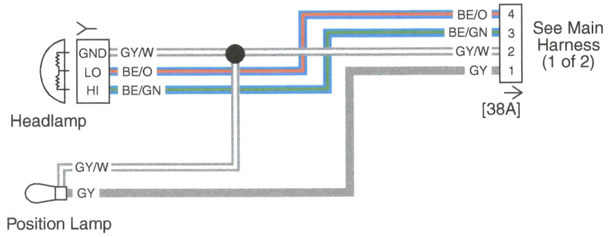



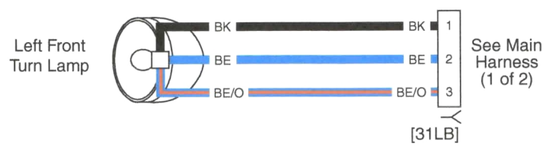

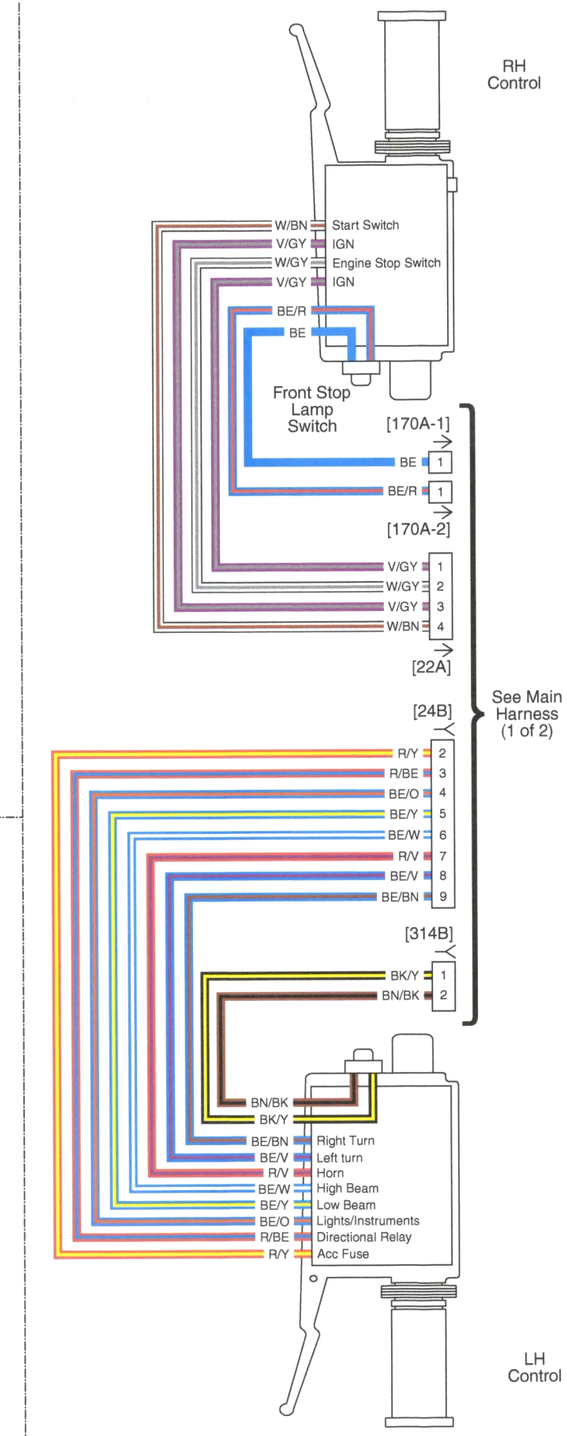

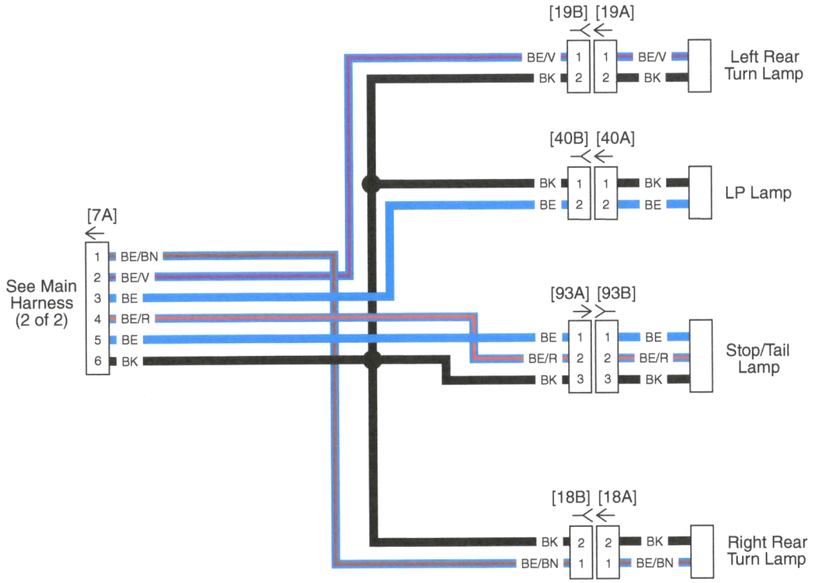

Figure B-12. Lighting and Hand Controls: 2015 Street

Figure B-12.
Lighting and Hand Controls: 2015 Street

Figure B-12.
Lighting and Hand Controls: 2015 Street

et00576

See Lighting And Hand Controls

Speedometer
Vehicle Speed LGN/Y
Low Oil Pressure Indicator W/O
Low Fuel Indicator W/Y
Check Engine TT O/R
Fused Battery V/O
Ground BK
[39B] [39A]
LGN/Y W/O W/Y GN/R R/O BK/GN

Indicator Lamps
Left Turn Indicator BE/V
Neutral Indicator W
High Beam Indicator BE/W
ACC R/Y
Right Turn Indicator BE/BN
[21B] [21A]
BE/V W BE/W R/Y BE/BN

Fuel Pump
Low Fuel W/Y
Ground BK
Ground BK/GN
System Relay R/GN
[141A] [141B]

Oil Pressure Switch
Oil Pressure W/O
Ground BK/GN
[120A] [120B]

Diode Pack
Clutch Switch TN/GN
JSS LGN/GY
Neutral W
Neutral W
[201A] [201B]

Right Turn Lamp
BK BE BE/BN
[31RA]

Headlamp
BE BK BE/W BE/Y
[38B]

Left Turn Lamp
BK BE BE/V
BE/GN
[31LA]

LH Control
R/Y R/BE BE/O BE/Y BE/W R/V BE/V BE/BN
[24A]

Clutch Lockout Switch
TN/GN BK/GN
[314A]

Horn
Ground
Horn Power
[122B-2] [122A-2] [122B-1] [122A-1]

VSS
Ground
5V Sensor power
Vehicle Speed
[65B] [65A]

JSS
Ground
JSS Signal
5V Sensor Power
[133B] [133A]

Neutral Switch
Neutral Switch Input
[131B] [131A]

CKP
CKP High
CKP Low

DLC
[91A]

See Lighting And Hand Controls

Front Stop Lamp Switch
[170B-1] [170B-2]

RH Control
[22B]

BAS
5V Sensor Ground
5V Sensor Power
TIP
[134B] [134A]

Ignition Coil
System Power
IGN Sense
Rear Ignition Coil
Front Ignition Coil
[83A] [83B]

ECT
ECT
5V Sensor Ground
[90A] [90B]

TMAP
5V Sensor Ground
IAT
5V Sensor Power
MAP Sensor
[80A] [80B]

TPS
5V Sensor Ground
5V Sensor Power
TPS
[88A] [88B]

Rear Injector
System Power
Rear Fuel injector
[85A] [85B]

Front Injector
System Power
Front Fuel injector
[84A] [84B]

IAC
IAC A Low
IAC B High
IAC B Low
IAC A High
[87A] [87B]

Purge Solenoid
System Power
Purge Solenoid
[95A] [95B]

Rear HO2S
System Power
Rear O2 Heater Ground
Rear HO2S
5V Sensor Ground
[137B] [137A]

[145B] [145A]

[78B-1] [78A-1] [78B-2] [78A-2]
Rear Ignition Coil
Front Ignition Coil
Front HO2 Heater Ground
VSS Input
Front Fuel Injector
Rear Fuel Injector
Map Input
JSS Signal
IGN Sense
Ground
CAN Low
CAN High
Rear HO2 Heater Ground
CKP High
Front HO2S
CKP Low
IAC A High
Fan Relay
System Relay
Check Engine TT
Purge Solenoid
IAT
5V Sensor Ground
Coolant Temp
5V Sensor Power
Ground
IAC A Low
IAC B High
IAC B Low
TIP Sensor
TPS
Run/Stop Swsitch
Rear HO2S
Battery Fuse
ECM

R/GN TN/GN GN/BK V/GN R/GN R/Y BE R/BE BE W/BN V/GY BE/V BE/BN BK/GN BK R/O BE/R
See Main Harness (2 of 2)

R/GN BK/O GN/BN BK/W
[138A] [138B]
System Power
Front O2 Heater Ground
Front HO2S
5V Sensor Ground
Front HO2S

Figure B-13. Main Harness (1 of 2): 2015 Street

Figure B-13.
Main Harness (1 of 2): 2015 Street

Figure B-13.
Main Harness (1 of 2): 2015 Street

et00577

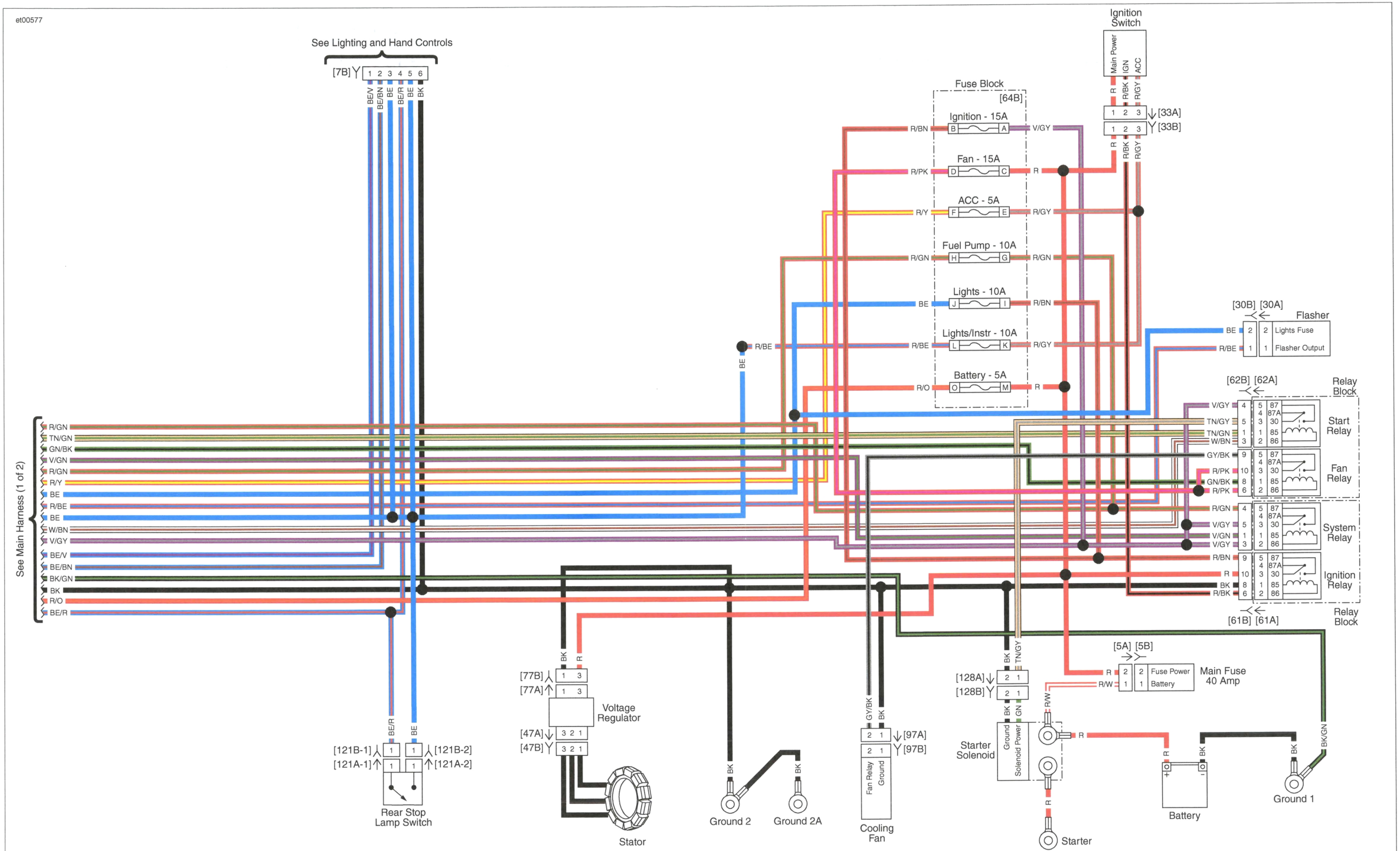

Figure B-14. Main Harness (2 of 2): 2015 Street

Figure B-14.
Main Harness (2 of 2): 2015 Street

Figure B-14.
Main Harness (2 of 2): 2015 Street

CONNECTOR LOCATIONS

Function/Location

All vehicle connectors are identified by their function and location. Refer to Table B-2.

Place and Color

The place (number of wire cavities of a connector housing) and color of the connector can also aid identification.

Connector Number

On wiring diagrams and in service/repair instructions, connectors are identified by a number in brackets.

Repair Instructions

The repair instructions in Appendix A are by connector type. Refer to Table B-2.

Table B-2. Connector Locations

NO.	DESCRIPTION	TYPE	TERMINAL PROBE COLOR	LOCATION
[5]	Main fuse	2-place Sumitomo Housing, Unsealed (Y)		Under right side cover
[7]	Rear lighting	6-Place Sumitomo MT series, Unsealed (W)	Purple	Under seat
[18]	Right rear turn lamp	2-Place Sumitomo MTW series, Unsealed (W)	Purple	Under passenger seat
[19]	Left rear turn lamp	2-Place Sumitomo MTW series, Unsealed (R)	Purple	Under passenger seat
[21]	Indicator lamps	6-Place Sumitomo MTW series, Unsealed (W)	Purple	Right side under fuel tank
[22]	Right hand controls	4-Place Sumitomo MTL series, Unsealed (BK)	Purple	Right side under fuel tank
[24]	Left hand controls	9-Place Sumitomo MTL series, Unsealed (BK)	Purple	Right side under fuel tank
[30]	Flasher	2-Place Sumitomo .250, Unsealed (BK)	Red	Under seat
[31L]	Left front turn signals	3-Place Sumitomo MTW series, Unsealed (BK)	Purple	Right side under fuel tank
[31R]	Right front turn signals	3-Place Sumitomo MTW series, Unsealed (BK)	Purple	Right side under fuel tank
[33]	Ignition switch	4-Place Sumitomo MTW series, Unsealed (BK)	Purple	Right side under fuel tank
[38]	Headlamp	4-Place Sumitomo MT series, Unsealed (BK)	Purple [38A] Gray [38B]	Right side under fuel tank
[39]	Speedometer	6-Place Sumitomo MT series, Unsealed (W)	Gray	Right side under fuel tank
[40]	LP lamp	2-Place Sumitomo MTW series, Unsealed (BK)	Purple	Under passenger seat
[47]	Voltage regulator to stator	3-Place Furukawa QLW series, Sealed (GY)	Red	Back of voltage regulator
[61]	Relay block 1	10-place Sumitomo Housing, Unsealed (BK)	Blue	Under right side cover
[62]	Relay block 2	10-place Sumitomo Housing, Unsealed (BK)	Blue	Under right side cover
[64]	Fuse block	18-place Tyco JPT Power Timer series, Unsealed (BK)	Purple	Under right side cover
[65]	VSS	3-Place Sumitomo MT series (BK)	Gray	Left rear of transmission case

Table B-2. Connector Locations

NO.	DESCRIPTION	TYPE	TERMINAL PROBE COLOR	LOCATION
[77]	Voltage regulator	3-Place Furukawa QLW series, Sealed (BK)	Red	Back of voltage regulator
[78-1]	ECM	GET 64 sealed	Breakout Box	Under passenger seat
[78-2]	ECM	GET 64 sealed	Breakout Box	Under passenger seat
[79]	CKP sensor	2-Place Sumitomo MT series Unsealed (W)	Purple [79A] Gray [79B]	Under left crankcase cover
[80]	TMAP sensor	4-Place MTA Compact 1.1M Sealed (BK)	Gray	Induction module
[83]	Ignition coil	4-Place Delphi GT 150 series, Sealed (BK)	Gray	Left side of engine
[84]	Front fuel injector	2-place Delphi GT150 Sealed (BK)	Gray	Between cylinders
[85]	Rear fuel injector	2-place Delphi GT150 Sealed (BK)	Gray	Between cylinders
[87]	IAC	4-place Delphi GT 150 Sealed (BK)	Gray	Between cylinders right side
[88]	TPS	SSD series, Sealed	Gray	Between cylinders right side
[90]	ECT sensor	2-Place Sumitomo MT Series, Sealed (BE)	Gray	Between cylinders left side
[91]	DLC	6-Place Deutsch DT Sealed (GY)	Black	Under right side cover
[93]	Stop/tail lamp	3-Place Sumitomo MTW series, Unsealed (BK)	Purple	Under passenger seat
[95]	Purge solenoid	2-place Delphi 150 Metri-Pack Sealed (R)	Gray	In front of battery
[97]	Cooling fan	2-place Tyco 070 Multilock (BK)	Gray	Right frame tube below fan
[120]	Oil pressure switch	2-place Tyco Timer series Sealed (BK)	Purple	Bottom front crankcase left side
[121]	Rear stop lamp switch	Tyco Insulated Spade terminals (BK)	Red	Right side next to rear fork pivot
[122]	Horn	Flag terminals (BK)	Red	Left side by front cylinder
[128]	Start solenoid	2-place Sumitomo MTL series, Unsealed (BK)	Gray	Under seat
[131]	Neutral switch	Right angle push on molded terminal Yazaki (BK)	Red	Bottom front of engine next to left frame tube
[133]	JSS (HDI)	3-Place Molex MX150 series Sealed (GY)	Gray	Front lower left frame tube
[134]	BAS	3-Place Sumitomo MT series (W)	Purple [134A] Gray [134B]	Under seat
[137]	Rear HO2S	4-place Molex MX 150 Sealed (BK)	Gray	Under left side cover
[138]	Front HO2S	4-place Molex MX 150 Sealed (GY)	Gray	Rear of engine right side
[141]	Fuel pump	4-Place Tyco Superseal Sealed (BK)	Gray	Under left side of fuel tank
[145]	Engine harness	16-Place Sumitomo DL series Sealed (GY)	Gray	Under seat
[170]	Front stop lamp switch	1-place Spade, Unsealed	Purple	Right side of handlebars

Table B-2. Connector Locations

NO.	DESCRIPTION	TYPE	TERMINAL PROBE COLOR	LOCATION
[201]	Diode pack	4-Place Deutsch DT series (GY)	Black	Under right side cover
[314]	Clutch switch	3-Place Sumitomo MT series (BK)	Purple	Handlebar left side
Battery ground	Negative battery cable connection	Ring terminal		Under left side cover
[GND 1]	Harness ground	Ring terminal		Center of frame above transmission
[GND 2]	Harness ground	Ring terminal		Under left side cover
[GND2A]	Engine ground	Ring terminal		Top of transmission

CONNECTOR END VIEWS

Table B-3. Main Fuse [5]

TERMINAL	WIRE COLOR	CIRCUIT DESCRIPTION
1	R/W	Battery
2	R	Fused battery

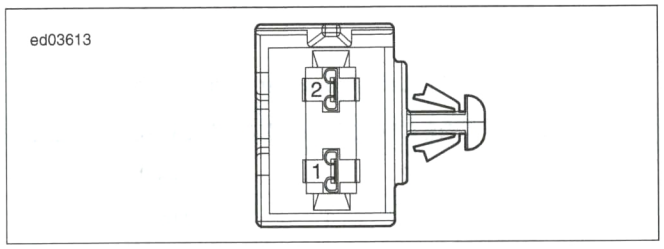

Figure B-15. Main Fuse [5]

Table B-4. Rear Lighting [7]

TERMINAL	WIRE COLOR	CIRCUIT DESCRIPTION
1	BE/V	Left turn signal
2	BE/BN	Right turn signal
3	BE	Lights
4	BE/R	Stop lamp
5	BE	Lights
6	BK	Ground

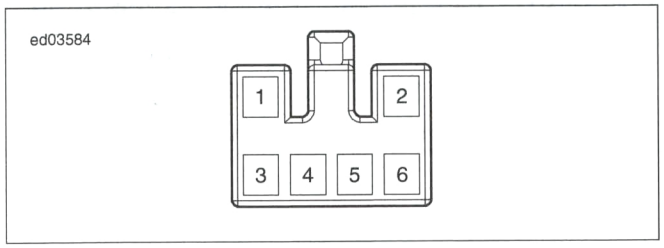

Figure B-16. Rear Lighting [7]

Table B-5. Right Rear Turn [18]

TERMINAL	WIRE COLOR	CIRCUIT DESCRIPTION
1	BE/BN	Right turn signal
2	BK	GND

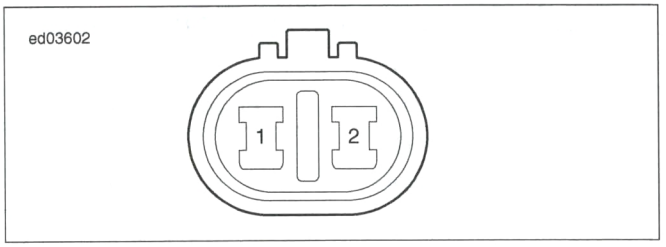

Figure B-17. Right Rear Turn [18]

Table B-6. Left Rear Turn [19]

TERMINAL	WIRE COLOR	CIRCUIT DESCRIPTION
1	BK	Left turn signal
2	BE/V	GND

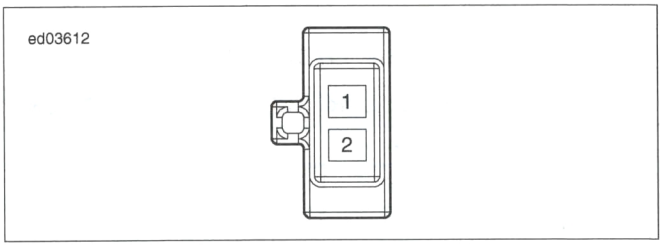

Figure B-18. Left Rear Turn [19]

Table B-7. Indicator Lamps [21]

TERMINAL	WIRE COLOR	CIRCUIT DESCRIPTION
1	BE/V	Left turn indicator
2	W	Neutral indicator
3	BE/W	High beam indicator
4	N/A	N/A
5	R/Y	ACC
6	BE/BN	Right turn indicator

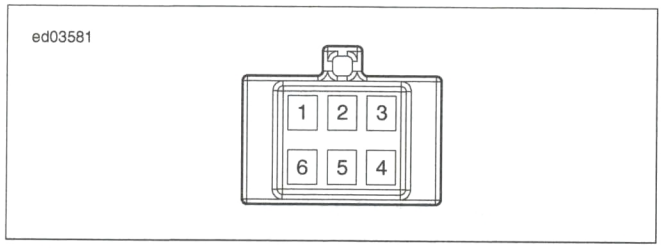

Figure B-19. Indicator Lamps [21]

Table B-8. RH Control [22]

TERMINAL	WIRE COLOR	CIRCUIT DESCRIPTION
1	V/GY	IGN
2	W/GY	Engine stop switch
3	V/GY	IGN
4	W/BN	Start switch

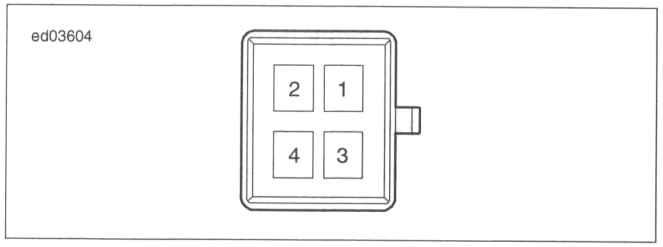

Figure B-20. RH Control [22]

Table B-9. LH Control [24]

TERMINAL	WIRE COLOR	CIRCUIT DESCRIPTION
1	N/A	N/A
2	R/Y	ACC
3	R/BE	Flasher output
4	BE/O	Lights/instruments
5	BE/Y	Low beam
6	BE/W	High beam
7	R/V	Horn
8	BE/V	Left turn
9	BE/BN	Right turn

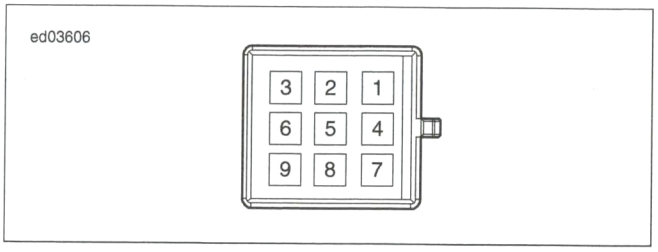

Figure B-21. LH Control [24]

Table B-10. Flasher [30]

TERMINAL	WIRE COLOR	CIRCUIT DESCRIPTION
1	R/BE	Flasher output
2	BE	Lights fuse

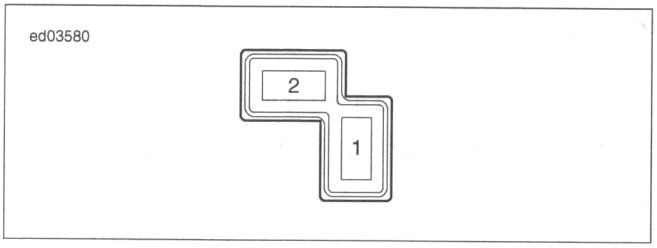

Figure B-22. Flasher [30]

Table B-11. Left Front Turn Lamp [31L]

TERMINAL	WIRE COLOR	CIRCUIT DESCRIPTION
1	BK	GND
2	BE	Running lights
3	BE/V	Left turn lamp

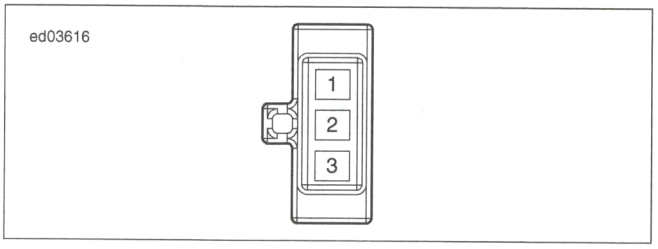

Figure B-23. Left Front Turn Lamp [31L]

Table B-12. Right Front Turn Lamp [31R]

TERMINAL	WIRE COLOR	CIRCUIT DESCRIPTION
1	BK	GND
2	BE	Running lights
3	BE/BN	Right turn lamp

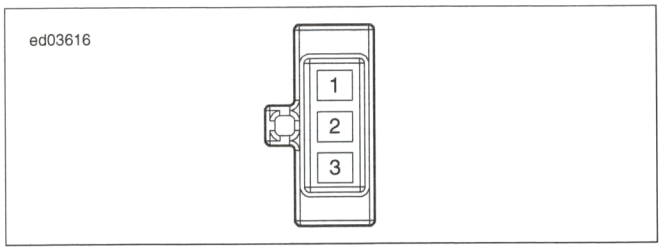

Figure B-24. Right Front Turn Lamp [31R]

Table B-13. Ignition Switch [33]

TERMINAL	WIRE COLOR	CIRCUIT DESCRIPTION
1	R	Battery
2	R/BK	IGN
3	R/GY	ACC
4	N/A	N/A

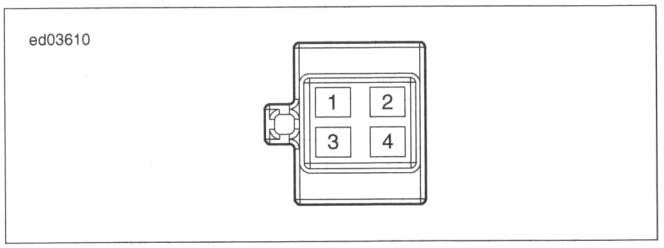

Figure B-25. Ignition Switch [33]

Table B-14. Headlamp [38]

TERMINAL	WIRE COLOR	CIRCUIT DESCRIPTION
1	BE	Running lights
2	BK	GND
3	BE/W	High beam headlamp
4	BE/Y	Low beam headlamp

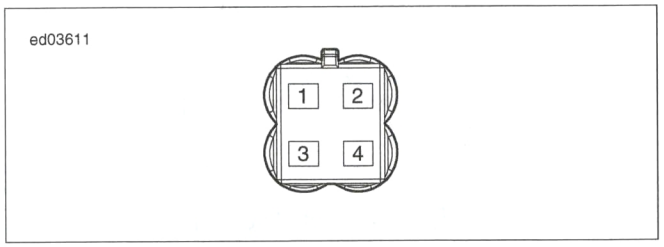

Figure B-26. Headlamp [38]

Table B-15. Speedometer [39]

TERMINAL	WIRE COLOR	CIRCUIT DESCRIPTION
1	LGN/Y	VSS
2	W/O	Low oil pressure indicator
3	W/Y	Low fuel level indicator
4	GN/R	Check engine TT
5	R/O	Battery
6	BK/GN	GND

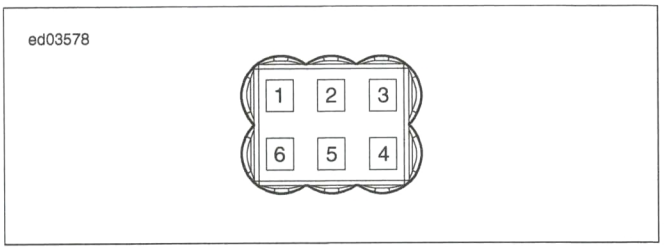

Figure B-27. Speedometer [39]

Table B-16. LP Lamp [40]

TERMINAL	WIRE COLOR	CIRCUIT DESCRIPTION
1	BK	GND
2	BE	Running lamps

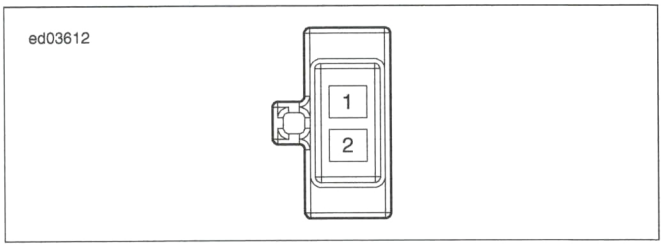

Figure B-28. LP Lamp [40]

Table B-17. Stator [47]

TERMINAL	WIRE COLOR	CIRCUIT DESCRIPTION
1	BK	Stator
2	BK	Stator
3	BK	Stator

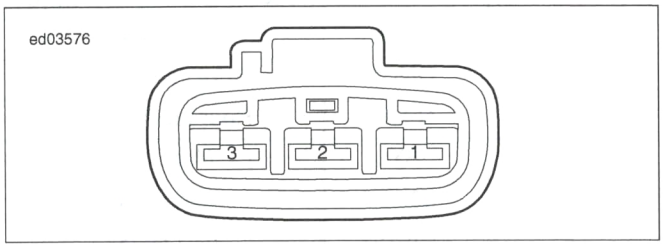

Figure B-29. Stator [47]

Table B-18. VSS [65]

TERMINAL	WIRE COLOR	CIRCUIT DESCRIPTION
1	BK/GN	GND
2	R/W	5V sensor power
3	LGN/Y	VSS

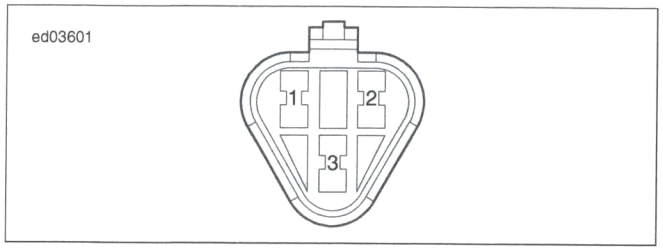

Figure B-30. VSS [65]

Table B-19. Voltage Regulator [77]

TERMINAL	WIRE COLOR	CIRCUIT DESCRIPTION
1	BK	GND
2	N/A	N/A
3	R	Battery Power

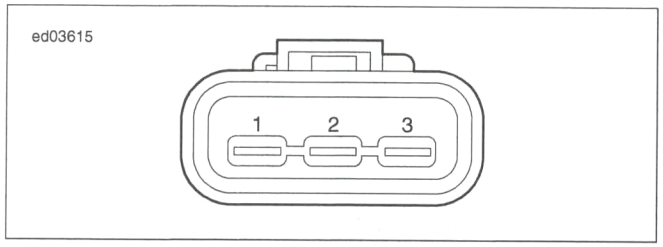

Figure B-31. Voltage Regulator [77]

Table B-20. [78B-1] ECM

TERMINAL	WIRE COLOR	CIRCUIT DESCRIPTION
1	GY/BE	Rear ignition coil
2	GN/BE	Front ignition coil
3	BK/O	Front HO2 heater ground
4	LGN/Y	VSS input
5	GN/Y	Front fuel injector
6	GY/Y	Rear fuel injector
7	GY	Map input
8	LGN/GY	JSS signal
9	LGN/BN	ION sense
10	BK/GN	Ground
11	N/A	N/A
12	N/A	N/A
13	W/BK	CAN low
14	W/R	CAN high
15	BK/PK	Rear HO2 heater ground
16	R	CKP high
17	GN/BN	Front HO2S
18	BK	CKP low

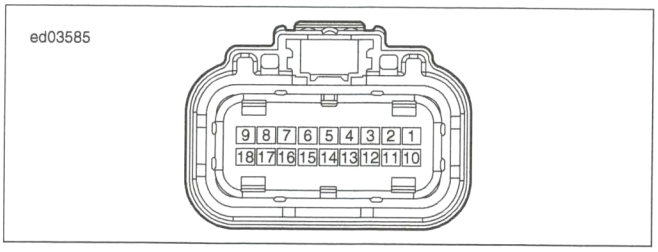

Figure B-32. ECM [78-1]

Table B-21. [78B-2] ECM

TERMINAL	WIRE COLOR	CIRCUIT DESCRIPTION
1	GN/O	IAC A high
2	GN/BK	Fan relay
3	V/GN	System relay
4	GN/R	Check engine TT
5	LGN/BK	Purge solenoid
6	GN/GY	IAT
7	BK/W	5V sensor ground
8	GY/GN	ECT
9	R/W	5V sensor power
10	BK/GN	Ground
11	GY/O	IAC A low
12	GN/W	IAC B high
13	GY/W	IAC B low
14	TN/BK	TIP sensor
15	GN/V	TPS
16	W/GY	Run/stop switch
17	GY/BN	Rear HO2S
18	R/O	Battery fuse

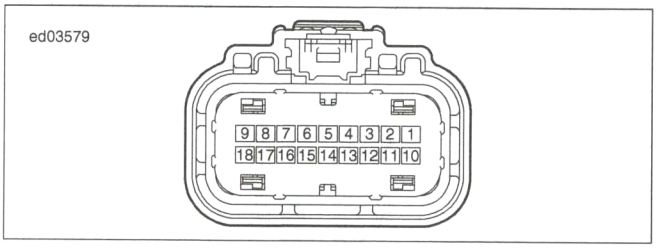

Figure B-33. ECM [78-2]

Table B-22. CKP [79]

TERMINAL	WIRE COLOR	CIRCUIT DESCRIPTION
1	R	CKP high
2	BK	CKP low

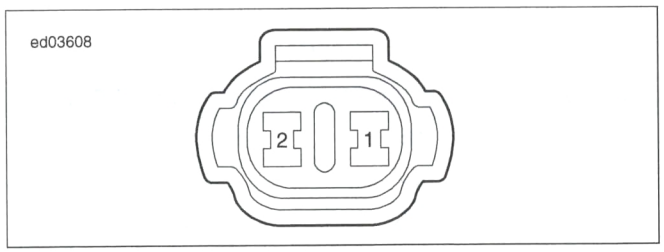

Figure B-34. CKP [79]

Table B-23. TMAP [80]

TERMINAL	WIRE COLOR	CIRCUIT DESCRIPTION
1	BK/W	5V sensor ground
2	GN/GY	IAT
3	R/W	5V sensor power
4	GY	MAP sensor

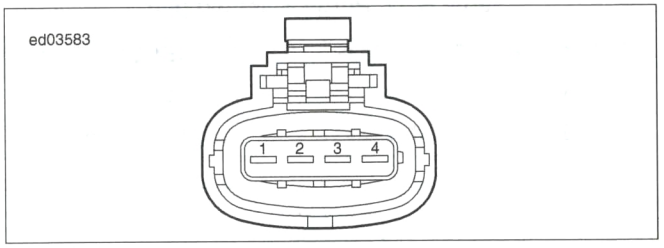

Figure B-35. TMAP [80]

Table B-24. Ignition Coil [83]

TERMINAL	WIRE COLOR	CIRCUIT DESCRIPTION
A	R/GN	System power
B	LGN/BN	Ion sense
C	GY/BE	Rear IGN coil
D	GN/BE	Front IGN coil

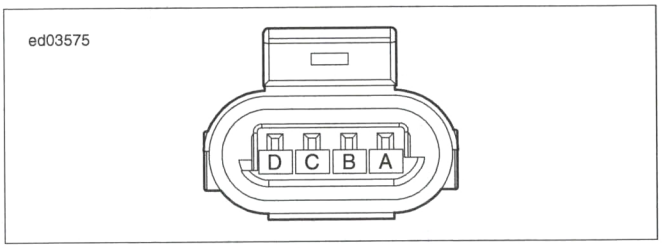

Figure B-36. Ignition Coil [83]

Table B-25. Front Injector [84]

TERMINAL	WIRE COLOR	CIRCUIT DESCRIPTION
A	R/GN	System power
B	GN/Y	Front fuel injector

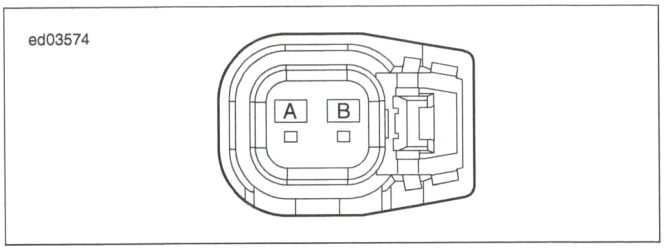

Figure B-37. Front Injector [84]

Table B-26. Rear Injector [85]

TERMINAL	WIRE COLOR	CIRCUIT DESCRIPTION
A	R/GN	System power
B	GY/Y	Rear fuel injector

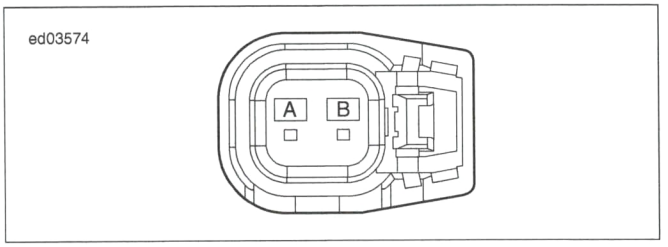

Figure B-38. Rear Injector [85]

Table B-27. IAC [87]

TERMINAL	WIRE COLOR	CIRCUIT DESCRIPTION
A	GY/O	IAC A low
B	GN/W	IAC B high
C	GY/W	IAC B low
D	GN/O	IAC A high

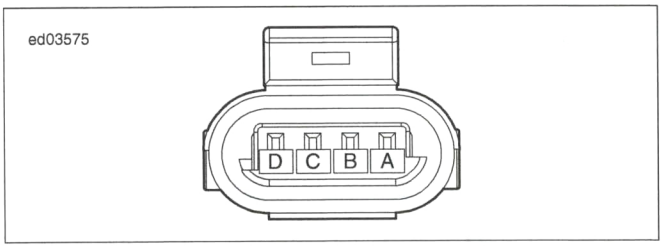

Figure B-39. IAC [87]

Table B-28. TPS [88]

TERMINAL	WIRE COLOR	CIRCUIT DESCRIPTION
1	BK/W	5V sensor ground
2	R/W	5V sensor power
3	GN/V	TPS

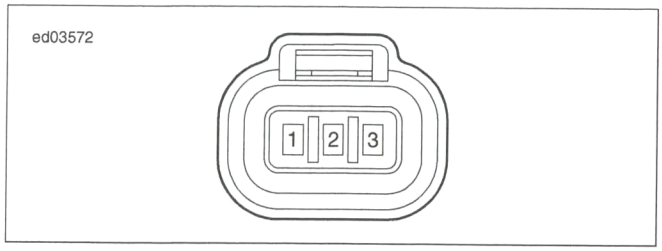

Figure B-40. TPS [88]

Table B-29. ECT [90]

TERMINAL	WIRE COLOR	CIRCUIT DESCRIPTION
1	GY/GN	ECT
2	BK/W	5V sensor ground

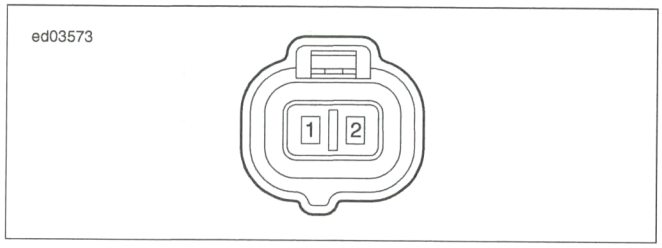

Figure B-41. ECT Sensor [90]

Table B-30. DLC [91]

TERMINAL	WIRE COLOR	CIRCUIT DESCRIPTION
1	W/R	CAN high
2	BK/GN	GND
3	W/BK	CAN low
4	N/A	N/A
5	R/Y	ACC
6	N/A	N/A

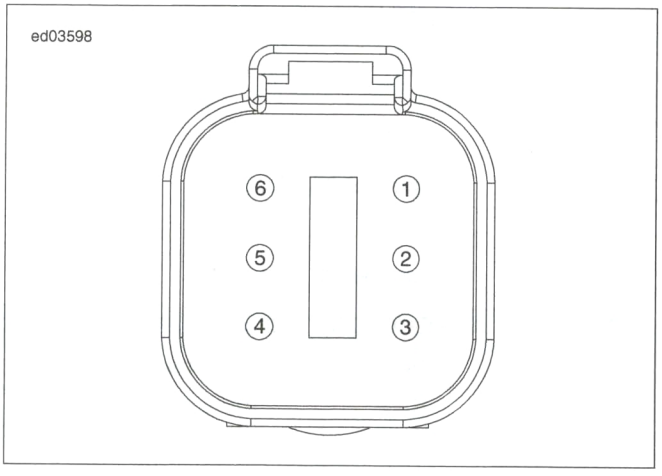

Figure B-42. DLC [91]

Table B-31. Stop/Tail Lamp [93]

TERMINAL	WIRE COLOR	CIRCUIT DESCRIPTION
1	BE	Running lights
2	BE/R	Stop lamp
3	BK	GND

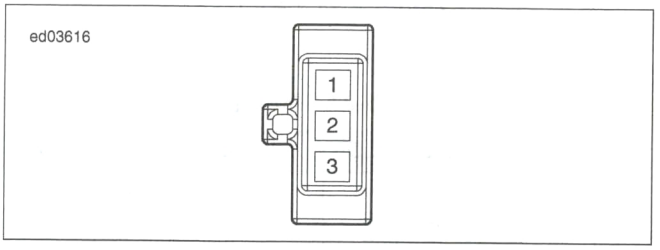

Figure B-43. Stop/Tail Lamp [93]

Table B-32. Purge Solenoid [95]

TERMINAL	WIRE COLOR	CIRCUIT DESCRIPTION
A	R/GN	System power
B	LGN/BK	Purge solenoid

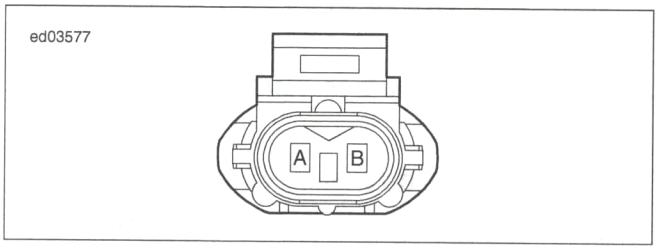

Figure B-44. Purge Solenoid [95]

Table B-33. Cooling Fan [97]

TERMINAL	WIRE COLOR	CIRCUIT DESCRIPTION
1	BK	GND
2	GY/BK	Fan relay

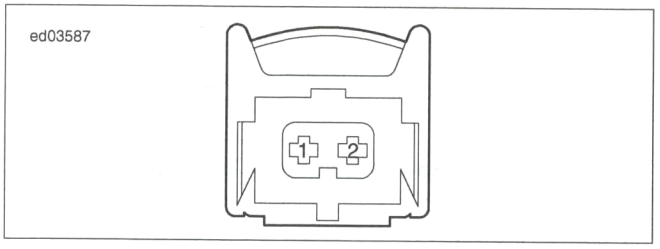

Figure B-45. Oil Pressure Switch [120]

Table B-34. Oil Pressure Switch [120]

TERMINAL	WIRE COLOR	CIRCUIT DESCRIPTION
1	W/O	Oil pressure
2	BK/GN	GND

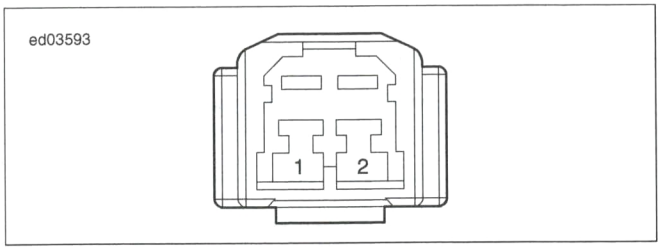

Figure B-46. Cooling Fan [97]

Table B-35. Rear Stop Lamp Switch [121]

TERMINAL	WIRE COLOR	CIRCUIT DESCRIPTION
1	BE/R	Stop lamp
2	BE	Running lights

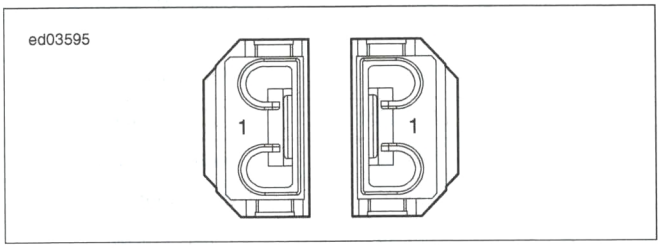

Figure B-47. Rear Stop Lamp Switch [121]

Table B-36. Horn [122]

TERMINAL	WIRE COLOR	CIRCUIT DESCRIPTION
1	R/V	Stop lamp
2	BK	GND

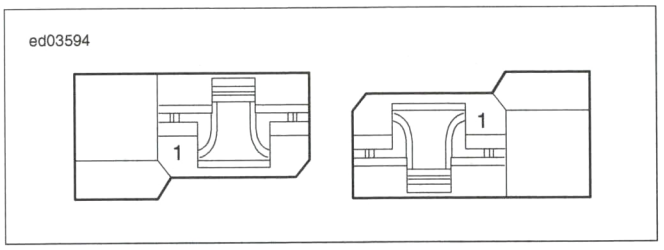

Figure B-48. Horn [122-1] and [122-2]

Table B-37. Starter Solenoid [128]

TERMINAL	WIRE COLOR	CIRCUIT DESCRIPTION
1	TN/GY	Starter solenoid
2	BK	GND

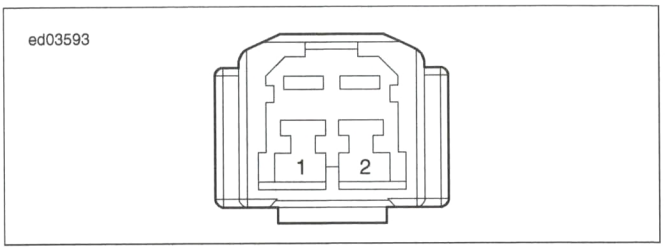

Figure B-49. Starter Solenoid [128]

Table B-38. Neutral Switch [131]

TERMINAL	WIRE COLOR	CIRCUIT DESCRIPTION
1	W	Neutral switch

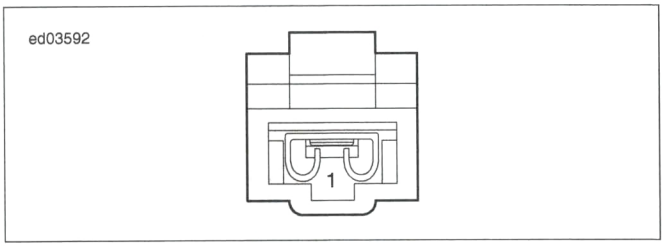

Figure B-50. Neutral Switch [131]

Table B-39. JSS [133]

TERMINAL	WIRE COLOR	CIRCUIT DESCRIPTION
1	R/W	5V sensor power
2	LGN/GY	JSS
3	BK/GN	GND

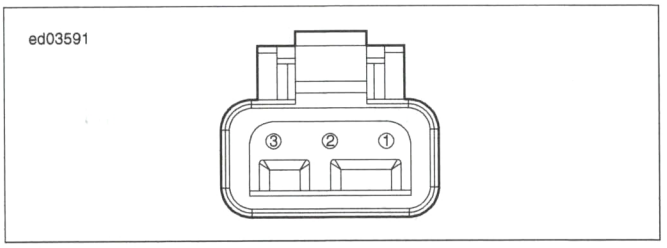

Figure B-51. JSS [133]

Table B-40. BAS [134]

TERMINAL	WIRE COLOR	CIRCUIT DESCRIPTION
1	BK/W	5V sensor ground
2	R/W	5V sensor power
3	TN/BK	TIP

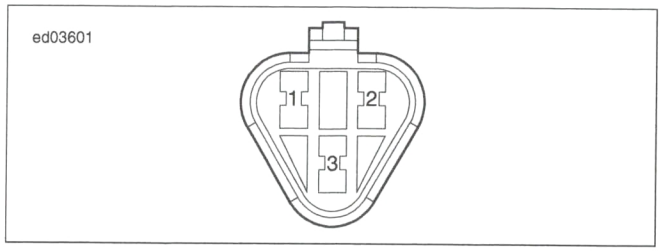

Figure B-52. BAS [134]

Table B-41. Rear HO2S [137]

TERMINAL	WIRE COLOR	CIRCUIT DESCRIPTION
1	R/GN	System power
2	BK/PK	Rear HO2S heater GND
3	GY/BN	Rear HO2S
4	BK/W	5V sensor gnd

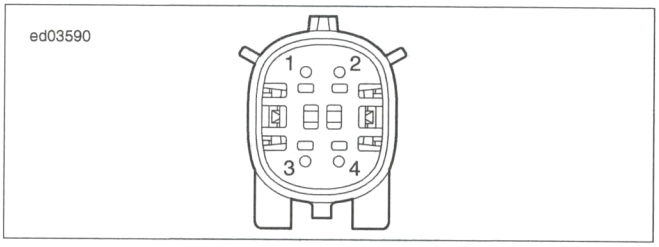

Figure B-53. Rear HO2S [137]

Table B-42. Front HO2S [138]

TERMINAL	WIRE COLOR	CIRCUIT DESCRIPTION
1	R/GN	System power
2	BK/O	Front HO2S heater GND
3	GN/BN	Front HO2S
4	BK/W	5V sensor gnd

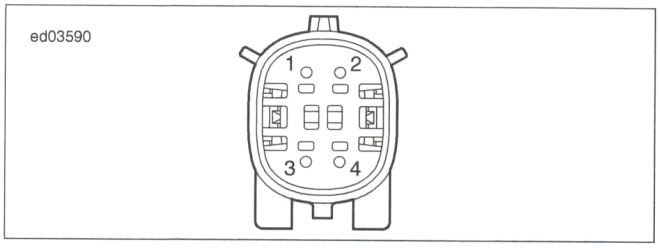

Figure B-54. Front HO2S [138]

Table B-43. Fuel Pump [141]

TERMINAL	WIRE COLOR	CIRCUIT DESCRIPTION
1	W/Y	Low fuel
2	BK	GND
3	BK/GN	GND
4	R/GN	System power

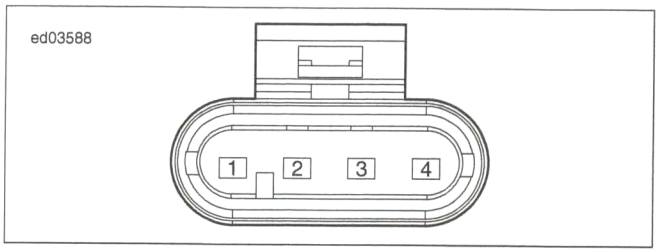

Figure B-55. Fuel Pump [141]

Table B-44. Engine Harness [145]

TERMINAL	WIRE COLOR	CIRCUIT DESCRIPTION
1	GY/W	IAC B low
2	GN/O	IAC A high
3	BK/W	5V sensor ground
4	GN/W	IAC B high
5	R/W	5V sensor power
6	LGN/BN	ION sense
7	R/GN	System power
8	GY/Y	Rear fuel injector
9	GY/O	IAC A low
10	GY/BE	Rear ignition coil
11	GY	MAP input
12	GN/V	TPS
13	GN/Y	Front fuel injector
14	GN/GY	IAT
15	GN/BE	Front ignition coil
16	GY/GN	ECT

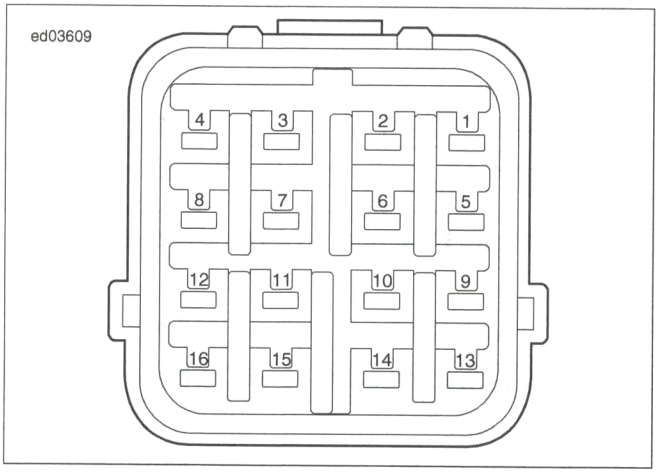

Figure B-56. Engine Harness [145]

Table B-45. Front Stop Lamp Switch [170]

TERMINAL	WIRE COLOR	CIRCUIT DESCRIPTION
1	BE/R	Stop lamp
2	BE	Running lights

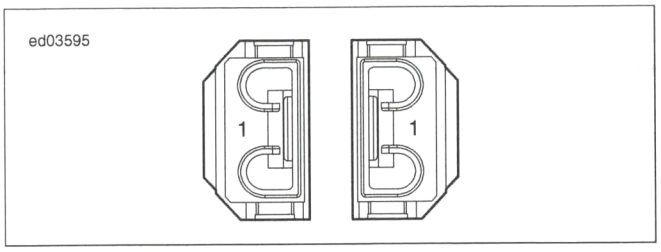

Figure B-57. Front Stop Lamp Switch [170]

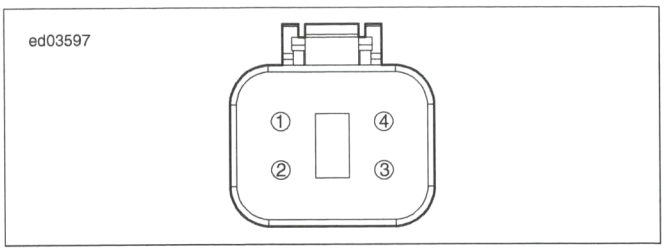

Figure B-58. Diode Pack [201]

Table B-46. Diode Pack [201]

TERMINAL	WIRE COLOR	CIRCUIT DESCRIPTION
1	TN/GN	Clutch switch
2	LGN/GY	JSS
3	W	Neutral
4	W	Neutral

Table B-47. Clutch Switch [314]

TERMINAL	WIRE COLOR	CIRCUIT DESCRIPTION
1	TN/GN	Clutch switch
2	BK/GN	GND

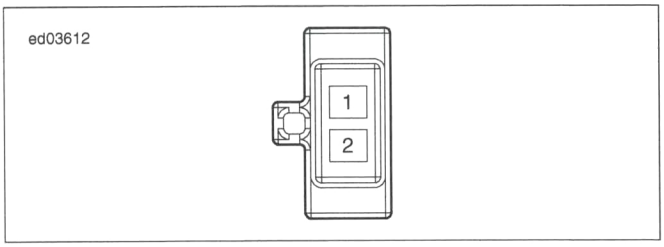

Figure B-59. Clutch Switch [314]

NOTES

SUBJECT	PAGE NO.
C.1 CONVERSIONS	C-1
C.2 FLUID CONVERSION	C-2
C.3 TORQUE CONVERSION	C-3
C.4 GLOSSARY	C-4

NOTES

CONVERSION TABLE

Table C-1. Metric Conversions

MILLIMETERS to INCHES (MM x 0.03937 = IN)								INCHES to MILLIMETERS (IN x 25.40 = MM)							
mm	in	mm	in	mm	in	mm	in	in	mm	in	mm	in	mm	in	mm
.1	.0039	25	.9842	58	2.283	91	3.582	.001	.025	.6	15.240	1-15/16	49.21	3-5/16	84.14
.2	.0078	26	1.024	59	2.323	92	3.622	.002	.051	5/8	15.875	2	50.80	3-3/8	85.72
.3	.0118	27	1.063	60	2.362	93	3.661	.003	.076	11/16	17.462	2-1/16	52.39	3.4	86.36
.4	.0157	28	1.102	61	2.401	94	3.701	.004	.102	.7	17.780	2.1	53.34	3-7/16	87.31
.5	.0197	29	1.142	62	2.441	95	3.740	.005	.127	3/4	19.050	2-1/8	53.97	3-1/2	88.90
.6	.0236	30	1.181	63	2.480	96	3.779	.006	.152	.8	20.320	2-3/16	55.56	3-9/16	90.49
.7	.0275	31	1.220	64	2.519	97	3.819	.007	.178	13/16	20.638	2.2	55.88	3.6	91.44
.8	.0315	32	1.260	65	2.559	98	3.858	.008	.203	7/8	22.225	2-1/4	57.15	3-5/8	92.07
.9	.0354	33	1.299	66	2.598	99	3.897	.009	.229	.9	22.860	2.3	58.42	3-11/16	93.66
1	.0394	34	1.338	67	2.638	100	3.937	.010	.254	15/16	23.812	2-5/16	58.74	3.7	93.98
2	.0787	35	1.378	68	2.677	101	3.976	1/64	.397	1	25.40	2-3/8	60.32	3-3/4	95.25
3	.1181	36	1.417	69	2.716	102	4.016	.020	.508	1-1/16	26.99	2.4	60.96	3.8	96.52
4	.1575	37	1.456	70	2.756	103	4.055	.030	.762	1.1	27.94	2-7/16	61.91	3-13/16	96.84
5	.1968	38	1.496	71	2.795	104	4.094	1/32	.794	1-1/8	28.57	2-1/2	63.50	3-7/8	98.42
6	.2362	39	1.535	72	2.834	105	4.134	.040	1.016	1-3/16	30.16	2-9/16	65.09	3.9	99.06
7	.2756	40	1.575	73	2.874	106	4.173	.050	1.270	1.2	30.48	2.6	66.04	3-15/16	100.01
8	.3149	41	1.614	74	2.913	107	4.212	.060	1.524	1-1/4	31.75	2-5/8	66.67	4	101.6
9	.3543	42	1.653	75	2.953	108	4.252	1/16	1.588	1.3	33.02	2-11/16	68.26	4-1/16	102.19
10	.3937	43	1.693	76	2.992	109	4.291	.070	1.778	1-5/16	33.34	2.7	68.58	4.1	104.14
11	.4331	44	1.732	77	3.031	110	4.331	.080	2.032	1-3/8	34.92	2-3/4	69.85	4-1/8	104.77
12	.4724	45	1.772	78	3.071	111	4.370	.090	2.286	1.4	35.56	2.8	71.12	4-3/16	106.36
13	.5118	46	1.811	79	3.110	112	4.409	.1	2.540	1-7/16	36.51	2-13/16	71.44	4.2	106.68
14	.5512	47	1.850	80	3.149	113	4.449	1/8	3.175	1-1/2	38.10	2-7/8	73.02	4-1/4	107.95
15	.5905	48	1.890	81	3.189	114	4.488	3/16	4.762	1-9/16	39.69	2.9	73.66	4.3	109.22
16	.6299	49	1.929	82	3.228	115	4.527	.2	5.080	1.6	40.64	2-15/16	74.61	4-5/16	109.54
17	.6693	50	1.968	83	3.268	116	4.567	1/4	6.350	1-5/8	41.27	3	76.20	4-3/8	111.12
18	.7086	51	2.008	84	3.307	117	4.606	.3	7.620	1-11/16	42.86	3-1/16	77.79	4.4	111.76
19	.7480	52	2.047	85	3.346	118	4.645	5/16	7.938	1.7	43.18	3.1	78.74	4-7/16	112.71
20	.7874	53	2.086	86	3.386	119	4.685	3/8	9.525	1-3/4	44.45	3-1/8	79.37	4-1/2	114.30
21	.8268	54	2.126	87	3.425	120	4.724	.4	10.160	1.8	45.72	3-3/16	80.96	4-9/16	115.89
22	.8661	55	2.165	88	3.464	121	4.764	7/16	11.112	1-13/16	46.04	3.2	81.28	4.6	116.84
23	.9055	56	2.205	89	3.504	122	4.803	1/2	12.700	1-7/8	47.62	3-1/4	82.55	4-5/8	117.47
24	.9449	57	2.244	90	3.543	123	4.842	9/16	14.288	1.9	48.26	3.3	83.82	4-11/16	119.06

UNITED STATES SYSTEM

Unless otherwise specified, all fluid volume measurements in this manual are expressed in United States (U.S.) units-of-measure. See below:

- 1 pint (U.S.) = 16 fluid ounces (U.S.)
- 1 quart (U.S.) = 2 pints (U.S.) = 32 fl. oz. (U.S.)
- 1 gallon (U.S.) = 4 quarts (U.S.) = 128 fl. oz. (U.S.)

BRITISH IMPERIAL SYSTEM

Fluid volume measurements in this manual do not include the British Imperial (Imp.) system equivalents. The following conversions exist in the British Imperial system:

- 1 pint (Imp.) = 20 fluid ounces (Imp.)
- 1 quart (Imp.) = 2 pints (Imp.)
- 1 gallon (Imp.) = 4 quarts (Imp.)

Although the same unit-of-measure terminology as the U.S. system is used in the British Imperial (Imp.) system, the actual volume of each British Imperial unit-of-measure differs from its U.S. counterpart. The U.S. fluid ounce is larger than the British Imperial fluid ounce. However, the U.S. pint, quart, and gallon are smaller than the British Imperial pint, quart, and gallon, respectively. To convert between U.S. units and British Imperial units, refer to the following:

- fluid ounces (U.S.) x 1.042 = fluid ounces (Imp.)
- pints (U.S.) x 0.833 = pints (Imp.)
- quarts (U.S.) x 0.833 = quarts (Imp.)
- gallons (U.S.) x 0.833 = gallons (Imp.)
- fluid ounces (Imp.) x 0.960 = fluid ounces (U.S.)
- pints (Imp.) x 1.201 = pints (U.S.)
- quarts (Imp.) x 1.201 = quarts (U.S.)
- gallons (Imp.) x 1.201 = gallons (U.S.)

METRIC SYSTEM

Fluid volume measurements in this manual include the metric system equivalents. In the metric system, 1 liter (L) = 1,000 milliliters (mL). To convert between U.S. units-of-measure and metric units-of-measure, refer to the following:

- fluid ounces (U.S.) x 29.574 = milliliters
- pints (U.S.) x 0.473 = liters
- quarts (U.S.) x 0.946 = liters
- gallons (U.S.) x 3.785 = liters
- milliliters x 0.0338 = fluid ounces (U.S.)
- liters x 2.114 = pints (U.S.)
- liters x 1.057 = quarts (U.S.)
- liters x 0.264 = gallons (U.S.)

TORQUE CONVERSION C.3

UNITED STATES SYSTEM

The U.S. units of torque, foot pounds and inch pounds, are used in this service manual. To convert units, use the following equations:

- foot pounds (ft-lbs) X 12.00000 = inch pounds (**in-lbs**).
- inch pounds (**in-lbs**) X 0.08333 = foot pounds (ft-lbs).

METRIC SYSTEM

All metric torque specifications are written in Newton-meters (Nm). To convert metric to United States units and United States to metric, use the following equations:

- Newton meters (Nm) X 0.737563 = foot pounds (ft-lbs).
- Newton meters (Nm) X 8.85085 = inch pounds (**in-lbs).**
- foot pounds (ft-lbs) X 1.35582 = Newton meters (Nm).
- inch pounds (**in-lbs**) X 0.112985 = Newton meters (Nm).

ACRONYMS AND ABBREVIATIONS

Table C-2. Acronyms and Abbreviations

ACRONYM OR ABBREVIATION	DESCRIPTION
A	Amperes
AAT	Ambient air temperature
ABS	Anti-lock braking system
AC	Alternating current
ACC	Accessory position on ignition switch
ACR	Automatic compression release
AGM	Absorbed glass mat (battery)
Ah	Ampere-hour
AIS	Active Intake Solenoid
AWG	American wire gauge
B+	Battery voltage
bar	Bar
BAS	Bank angle sensor
BCM	Body control module
BOB	Breakout box
BTDC	Before top dead center
°C	Celsius (Centigrade)
CA	California
CAL	Calibration
CAN	Controller area network
CB Tx	CB send transmission
CB Rx	CB receive transmission
cc	Cubic centimeters
CCA	Cold cranking amps
CCW	Counterclockwise
CKP	Crankshaft position
cm	Centimeters
cm^3	Cubic centimeters
CW	Clockwise
DC	Direct current
DLC	Data link connector
DOM	Domestic
DOT	Department of Transportation
DTC	Diagnostic trouble code
DVOM	Digital volt ohm meter
ECM	Electronic control module
ECT	Engine coolant temperature
ECU	Electronic Control Unit
EEPROM	Electrically erasable programmable read only memory
EFI	Electronic fuel injection
EHCU	Electro Hydraulic Control Unit

Table C-2. Acronyms and Abbreviations

ACRONYM OR ABBREVIATION	DESCRIPTION
ET	Engine temperature
ETC	Electronic throttle control
EVAP	Evaporative emissions control system
°F	Fahrenheit
fl oz	Fluid ounce
FPS	Fuel pressure sensor
ft	Feet
ft-lbs	Foot pounds
FTP	Flash to pass
g	Gram
gal	Gallon
GAWR	Gross axle weight rating
GND	Ground (electrical)
GPS	Global positioning system
GVWR	Gross vehicle weight rating
HCU	Hydraulic control unit
HDI	Harley-Davidson International
HD-Link	Networking system
H-DSSS	Harley-Davidson smart security system
HFM	Hands-free mode
HFSM	Hands-free security module
Hg	Mercury
H02S	Heated oxygen sensor
hp	Horsepower
hr	Hour
IAC	Idle air control
IAT	Intake air temperature
IC	Instrument cluster
ID	Inside diameter
IGN	Ignition light/key switch position
in	inch
in^3	Cubic inch
INJ PW	Injector pulse width
INTCM	Intercom
in-lbs	Inch pounds
JSS	Jiffy stand sensor
kg	Kilogram
km	Kilometer
km/h	Kilometers per hour
kPa	Kilopascal
kW	Kilowatt
L	Liter
lb	Pounds
LCD	Liquid crystal display

Table C-2. Acronyms and Abbreviations

ACRONYM OR ABBREVIATION	DESCRIPTION
LED	Light emitting diode
LH	Left hand
LHCM	Left hand control module
LP	License plate
LT	Left
mA	Milliampere
MAP	Manifold absolute pressure
max	Maximum
mi	Mile
min	Minimum
mL	Milliliter
mm	Millimeter
mph	Miles per hour
ms	Millisecond
Nm	Newton-meter
NIM	Navigation interface module
NiMH	Nickel metal hydride
N/A	Not applicable
O2	Oxygen
OD	Outside diameter
OEM	Original equipment manufacturer
oz	Ounce
P&A	Parts and Accessories
Part No.	Part number
PIN	Personal identification number
PND	Personal navigation device
psi	Pounds per square inch
PWM signal	Pulse width modulated signal
qt	Quart
RAD	Radio
RCM	Reverse control module
RDS	Radio data system
RES	Reserve mark on fuel supply valve
RH	Right hand
RHCM	Right hand control module
rpm	Revolutions per minute
RT	Right
s	Seconds
SCFH	Cubic feet per hour at standard conditions
SDARS	Satellite digital audio radio service
SPDO	Speedometer
SPKR	Speaker
STT	Stop/tail/turn
TA	Traffic announcement

Table C-2. Acronyms and Abbreviations

ACRONYM OR ABBREVIATION	DESCRIPTION
TCA	Throttle control actuator
TDC	Top dead center
TGS	Twist grip sensor
TPS	Throttle position sensor
TSM	Turn signal module
TSSM	Turn signal/security module
USB	Universal serial bus
V	Volt
VAC	Volts of alternating current
VDC	Volts of direct current
VIN	Vehicle identification number
VR	Voice recognition
VSS	Vehicle speed sensor
W	Watt
WA	Weather alert
WSS	Wheel speed sensor

NOTES

Tools Used in This Manual

PART NUMBER	TOOL NAME	NOTES
98716-87A	STORAGE COVER	2.27 STORAGE, Place in Storage
99863-01A	GLOBAL BATTERY CHARGER	2.25 INSPECT BATTERY, Storage
B-50085	TERMINAL EXTRACTOR	A.4 FURUKAWA QLW SEALED CONNECTORS, Remove Terminal
B-50085	TERMINAL EXTRACTOR	A.6 SUMITOMO DL SEALED AND MT CONNECTORS, Remove Terminal
B-50085	TERMINAL EXTRACTOR	A.9 TYCO GET 64 UNSEALED CONNECTORS, Remove Terminal
B-50085	TERMINAL EXTRACTOR	A.12 TYCO SUPER SEAL 1.5 SEALED CONNECTOR, Remove Terminal
GA500A	SNAP-ON TERMINAL PICK	A.1 BOSCH COMPACT 1.1M CONNECTORS, Remove Terminal
GA500A	SNAP-ON TERMINAL PICK	A.10 TYCO JUNIOR POWER TIMER UNSEALED CONNECTOR, Remove Terminal
HD-23688	COOLANT TESTER (F)	7.4 DIAGNOSE AND TEST, Freeze Point Test
HD-26568	COOLANT TESTER (C)	7.4 DIAGNOSE AND TEST, Freeze Point Test
HD-29545-6	COOLANT FLUORESCENT LEAK DETECTION DYE	7.4 DIAGNOSE AND TEST, Leak Detection Dye Test
HD-33223-1	CYLINDER COMPRESSION GAUGE	4.6 TROUBLESHOOTING, Compression Test
HD-33416	UNIVERSAL DRIVER HANDLE	3.19 STEERING HEAD/FORK STEM AND BRACKET ASSEMBLY, Clean and Inspect
HD-35381-A	BELT TENSION GAUGE	2.19 INSPECT AND ADJUST DRIVE BELT AND SPROCKETS, Measure Drive Belt Deflection
HD-35457	BLACK LIGHT LEAK DETECTOR	7.4 DIAGNOSE AND TEST, Leak Detection Dye Test
HD-37436	VALVE SPRING COMPRESSOR	4.17 VALVES, Remove
HD-37436	VALVE SPRING COMPRESSOR	4.17 VALVES, Install
HD-39301-A	STEERING HEAD BEARING RACE REMOVAL TOOL	3.19 STEERING HEAD/FORK STEM AND BRACKET ASSEMBLY, Clean and Inspect
HD-39786	CYLINDER HEAD HOLDING FIXTURE	4.17 VALVES, Remove
HD-39786	CYLINDER HEAD HOLDING FIXTURE	4.17 VALVES, Install
HD-39965-A	DEUTSCH TERMINAL CRIMP TOOL	A.3 DEUTSCH DT SEALED CONNECTORS, Crimp Terminal
HD-41137	HOSE CLAMP PLIERS	6.5 FUEL TANK, Install
HD-41137	HOSE CLAMP PLIERS	7.6 THERMOSTAT HOUSING, Install
HD-41182	FUEL PRESSURE GAUGE	6.7 FUEL PRESSURE TEST, Test
HD-41417	PROPANE ENRICHMENT KIT	6.19 INTAKE LEAK TEST, Leak Tester
HD-41475	DEUTSCH TERMINAL REPAIR KIT	A.3 DEUTSCH DT SEALED CONNECTORS, Disconnect and Connect
HD-41475-100	FLAT BLADE L-HOOK	A.3 DEUTSCH DT SEALED CONNECTORS, Disconnect and Connect
HD-41609	AMP MULTI-LOCK CRIMPER	A.8 TYCO 070 MULTILOCK UNSEALED CONNECTOR, Crimp Terminal
HD-44060C	WHEEL BEARING INSTALLER/REMOVER	3.8 SEALED WHEEL BEARINGS, Remove
HD-44061	FUEL PRESSURE GAUGE ADAPTER (2)	6.7 FUEL PRESSURE TEST, Test
HD-44358	FLYWHEEL SUPPORT FIXTURE	4.32 CRANKSHAFT AND CONNECTING RODS, Disassemble
HD-45308	OIL PRESSURE GAUGE	4.5 OIL PRESSURE, Oil Pressure Check
HD-45335	COOLANT SYSTEM PRESSURE TESTER	7.4 DIAGNOSE AND TEST, Pressure Cap Test
HD-45335	COOLANT SYSTEM PRESSURE TESTER	7.4 DIAGNOSE AND TEST, Tests for Leaking Gasket
HD-45968	FAT JACK	2.2 GENERAL, Secure the Motorcycle for Service

Tools Used in This Manual

PART NUMBER	TOOL NAME	NOTES
HD-45968	FAT JACK	4.7 FRONT ENGINE MOUNT, Remove
HD-47925	AXLE NUT TORQUE ADAPTER	3.5 REAR WHEEL, Remove
HD-48114	TERMINAL REMOVER	A.5 MOLEX MX 150 SEALED CONNECTORS, Remove Terminal
HD-48119	TERMINAL CRIMPER	A.5 MOLEX MX 150 SEALED CONNECTORS, Crimp Terminal
HD-48921	REAR WHEEL COMPENSATOR SPROCKET BEARING REMOVER/INSTALLER	3.6 REAR WHEEL COMPENSATOR, Disassemble
HD-50120	UNIVERSAL CRIMPER SET	A.9 TYCO GET 64 UNSEALED CONNECTORS, Crimp Terminal
HD-50120-2	HAND CRIMP FRAME	A.9 TYCO GET 64 UNSEALED CONNECTORS, Crimp Terminal
HD-50120-7	TYCO GET 64 DIE	A.9 TYCO GET 64 UNSEALED CONNECTORS, Crimp Terminal
HD-51281	LOCKING TOOL	4.24 CRANKSHAFT GEAR, Remove
HD-51281	CRANKSHAFT LOCKING TOOL	5.7 CLUTCH, Remove
HD-51281	CRANKSHAFT LOCKING TOOL	5.7 CLUTCH, Install
HD-51281	CRANKSHAFT LOCKING TOOL	5.7 CLUTCH, Install
HD-51439	SHOCK ADJUSTMENT SPANNER	3.22 SHOCK ABSORBERS, Adjust Preload
HD-51440	SHIFTER SHAFT SEAL INSTALLER	5.6 SHIFTER SHAFT, Install
HD-51441	COUNTERBALANCER PIN	4.23 BALANCER, Install
HD-51442	CAM HOLDER	4.13 CAMSHAFT SPROCKET AND TIMING CHAIN, Camshaft Sprocket, Timing Chain and Cam Timing
HD-51453	OIL FILTER WRENCH	2.5 REPLACE ENGINE OIL AND FILTER, Change Oil and Oil Filter
HD-51459	CYLINDER LINER REMOVER AND INSTALLER TC18	4.19 CYLINDERS, Disassemble
HD-51460	ENGINE STAND ADAPTER	4.10 REBUILD ENGINE, Engine Rebuild Sequence
HD-51461	SPRING GEAR ROTATION TOOL	4.23 BALANCER, Install
HD-51462	FORK SEAL AND BUSHING INSTALLATION TOOL	3.18 FRONT FORK, Assemble
HD-51463	ALTERNATOR ROTOR PULLER	8.7 ALTERNATOR, Remove
HD-51501	ALTERNATOR LOCKING TOOL	8.7 ALTERNATOR, Remove
HD-51501	ALTERNATOR LOCKING TOOL	8.7 ALTERNATOR, Install
HD-51502	TAPPET ADJUSTING WRENCH	2.24 INSPECT AND ADJUST VALVE LASH, Inspect and Adjust
HD-51503	CRANKSHAFT GUIDES	4.32 CRANKSHAFT AND CONNECTING RODS, Remove
HD-51505	CLUTCH LOCKING TOOL	5.7 CLUTCH, Remove
HD-51505	CLUTCH LOCKING TOOL	5.7 CLUTCH, Install
HD-51509	OUTPUT PULLEY TOOL	5.5 OUTPUT PULLEY, Remove
HD-59000-B	OIL LEVEL GAUGE	3.18 FRONT FORK, Drain and Fill Forks
HD-99500-80	WHEEL TRUING AND BALANCING STAND	3.7 WHEEL RUNOUT, Inspect
SNAP-ON BB200A	BASIC VACUUM BRAKE BLEEDER	3.16 BLEED BRAKES, Fill and Bleed

FASTENER	TORQUE VALUE		NOTES
Air cleaner backplate screws	5.0-7.0 Nm	45-62 **in-lbs**	6.3 AIR CLEANER ASSEMBLY, Install
Air filter bracket nuts	6.0-8.0 Nm	54-70 **in-lbs**	2.23 INSPECT AIR FILTER, Install
Air filter cover screw	6.0-8.0 Nm	54-70 **in-lbs**	2.23 INSPECT AIR FILTER, Install
Alternator access cover screws	10.0-12.0 Nm	89-106 **in-lbs**	4.21 ALTERNATOR COVER, Assemble
Alternator cover screws	10.0-12.0 Nm	89-106 **in-lbs**	4.21 ALTERNATOR COVER, Install
Alternator rotor bolt	160.0-170.0 Nm	118-125 ft-lbs	8.7 ALTERNATOR, Install
Alternator stator screws	10.0-12.0 Nm	89-106 **in-lbs**	4.21 ALTERNATOR COVER, Assemble
Baffle plate screw	3.0-5.0 Nm	27-44 **in-lbs**	4.12 CYLINDER HEAD COVERS, Assemble
Balancer bearing retainer screws	10.0-12.0 Nm	89-106 **in-lbs**	4.23 BALANCER, Install/Apply LOCTITE 243 MEDIUM STRENGTH THREADLOCKER AND SEALANT (blue).
Balancer shaft nut	160.0-170.0 Nm	118-126 ft-lbs	4.23 BALANCER, Install
Battery ground stud	6.0-10.0 Nm	54-88 **in-lbs**	2.25 INSPECT BATTERY, Install
Battery ground stud	6.0-10.0 Nm	54-88 **in-lbs**	8.4 POWER DISCONNECT, Connect Power
Battery tray cover screws	2.3-3.3 Nm	21-29 **in-lbs**	8.29 BATTERY TRAY, Install
Battery tray screws	2.3-3.3 Nm	21-29 **in-lbs**	8.29 BATTERY TRAY, Install
Brake caliper bleeder screw	3.9-6.9 Nm	35-61 **in-lbs**	3.16 BLEED BRAKES, Drain
Brake caliper bleeder screw	3.9-6.9 Nm	35-61 **in-lbs**	3.16 BLEED BRAKES, Fill and Bleed
Brake master cylinder reservoir cover screw	2.0-4.0 Nm	18-35 **in-lbs**	3.16 BLEED BRAKES, Fill and Bleed
Camshaft bolt	40.0-44.0 Nm	30-32 ft-lbs	4.13 CAMSHAFT SPROCKET AND TIMING CHAIN, Install
Camshaft retainer plate screw	10.0-12.0 Nm	89-106 **in-lbs**	4.15 ROCKER ARMS, Install
Cam sprocket bolt	40-44 Nm	29.5-32.4 lb-ft	4.13 CAMSHAFT SPROCKET AND TIMING CHAIN, Camshaft Sprocket, Timing Chain and Cam Timing
Cam sprocket bolt	40-44 Nm	29.5-32.4 lb-ft	4.13 CAMSHAFT SPROCKET AND TIMING CHAIN, Camshaft Sprocket, Timing Chain and Cam Timing
Cam sprocket bolt	40-44 Nm	29.5-32.4 lb-ft	4.13 CAMSHAFT SPROCKET AND TIMING CHAIN, Camshaft Sprocket, Timing Chain and Cam Timing
Chain guide shoulder bolt	10-12 Nm	7.4-8.9 lb-ft	4.13 CAMSHAFT SPROCKET AND TIMING CHAIN, Camshaft Sprocket, Timing Chain and Cam Timing
Chain guide shoulder bolt	10-12 Nm	7.4-8.9 lb-ft	4.13 CAMSHAFT SPROCKET AND TIMING CHAIN, Camshaft Sprocket, Timing Chain and Cam Timing
Chain guide shoulder bolt	10-12 Nm	7.4-8.9 lb-ft	4.13 CAMSHAFT SPROCKET AND TIMING CHAIN, Camshaft Sprocket, Timing Chain and Cam Timing
Charcoal canister bracket to frame nut	5.3-6.5 Nm	47-57 **in-lbs**	6.21 CHARCOAL CANISTER: CALIFORNIA EMISSIONS, Install
Charcoal canister to bracket screws	1.7-2.3 Nm	15-20 **in-lbs**	6.21 CHARCOAL CANISTER: CALIFORNIA EMISSIONS, Install
Clutch assembly nut	160.0-170.0 Nm	118-125 ft-lbs	5.7 CLUTCH, Install
Clutch cover screws	10.0-12.0 Nm	89-106 **in-lbs**	4.22 CLUTCH COVER, Install/See procedure for torque sequence.
Clutch hand control bracket screw	4.9-6.1 Nm	44-53 **in-lbs**	3.23 CLUTCH CONTROL, Install
Clutch lifter plate screws	8.0-10.0 Nm	71-88 **in-lbs**	5.7 CLUTCH, Install

FASTENER	TORQUE VALUE		NOTES
Connecting rod screws (first torque)	19-23 Nm	14-16 ft-lbs	4.32 CRANKSHAFT AND CONNECTING RODS, Assemble/Lubricate threads with engine oil
Connecting rod screws (second torque)	85-95 degrees	85-95 degrees	4.32 CRANKSHAFT AND CONNECTING RODS, Assemble
Coolant drain screw	10.0-12.0 Nm	89-106 **in-lbs**	7.5 COOLANT, Drain and Fill Cooling System
Coolant overflow tank screws	2.3-3.3 Nm	21-29 **in-lbs**	7.8 COOLANT OVERFLOW TANK, Install
Coolant pump and cover screws	10.0-12.0 Nm	89-106 **in-lbs**	7.7 COOLANT PUMP, Install
Coolant sleeve screw	10.0-12.0 Nm	89-106 **in-lbs**	4.19 CYLINDERS, Assemble
Coolant thermostat housing screws	9.0-11.0 Nm	80-97 **in-lbs**	7.6 THERMOSTAT HOUSING, Install
Cooling fan screws	2.3-3.3 Nm	21-29 **in-lbs**	8.25 COOLING FAN, Install
Crankcase M6 screws	10.0-12.0 Nm	89-106 **in-lbs**	4.28 CRANKCASE ASSEMBLY, Assemble/See torque sequence in procedure.
Crankcase M8 screws	20.0-25.0 Nm	15-18 lb-ft	4.28 CRANKCASE ASSEMBLY, Assemble/See torque sequence in procedure.
Crankshaft gear bolt	160.0-170.0 Nm	118-125 ft-lbs	4.24 CRANKSHAFT GEAR, Install
Crankshaft position sensor screws	10.0-12.0 Nm	89-106 **in-lbs**	4.21 ALTERNATOR COVER, Assemble
Cylinder head bolt	50.0-54.0 Nm	37-39 ft-lbs	4.14 CYLINDER HEADS, Install/Apply ENGINE OIL to cylinder head bolt washers and threaded portion of the cylinder head bolts. See procedure for torque sequence.
Cylinder head cover bolt	10.0-12.0 Nm	89-106 **in-lbs**	4.12 CYLINDER HEAD COVERS, Install
Cylinder head flange bolt	20.0-25.0 Nm	15-18 ft-lbs	4.14 CYLINDER HEADS, Install/Apply ENGINE OIL to threaded portion of the cylinder head flange bolts. See procedure for torque sequence.
Detent arm screw	10.0-12.0 Nm	89-106 **in-lbs**	5.6 SHIFTER SHAFT, Install
Detent collar screw	5.0-7.0 Nm	45-61 **in-lbs**	5.6 SHIFTER SHAFT, Install
ECM screws	2.3-3.3 Nm	21-29 **in-lbs**	8.24 ELECTRONIC CONTROL MODULE (ECM), Install
Electrical panel screw	2.3-3.3 Nm	21-29 **in-lbs**	2.25 INSPECT BATTERY, Install
Engine coolant temperature sensor (ECT)	15.0 Nm	133 **in-lbs**	7.10 ENGINE COOLANT TEMPERATURE (ECT) SENSOR, Install
Engine ground cable nut	6.0-10.0 Nm	54-88 **in-lbs**	8.30 ENGINE GROUND CABLE, Install
Engine ground cable screw	9.0-11.0 Nm	80-97 **in-lbs**	8.30 ENGINE GROUND CABLE, Install
Engine mount screw	22.0-29.0 Nm	17-21 ft-lbs	3.34 RIDER FOOT CONTROLS, Install
Engine oil drain plug	20.0-25.0 Nm	15-18 ft-lbs	2.5 REPLACE ENGINE OIL AND FILTER, Change Oil and Oil Filter
Exhaust shield clamps	2.3-4.5 Nm	21-39 **in-lbs**	6.18 EXHAUST SYSTEM, Assemble
Exhaut to engine nuts	8.0-10.0 Nm	71-88 **in-lbs**	6.18 EXHAUST SYSTEM, Install
Fork slider tube screw	14.9-24.4 Nm	11-17 ft-lbs	3.18 FRONT FORK, Assemble
Fork stem pinch screw	50.0-60.0 Nm	37-44 ft-lbs	2.14 ADJUST STEERING HEAD BEARINGS, Fall-Away
Fork stem pinch screw	50.0-60.0 Nm	37-44 ft-lbs	3.19 STEERING HEAD/FORK STEM AND BRACKET ASSEMBLY, Install
Fork stem screw, first torque	22.6 Nm	200**in-lbs**	2.14 ADJUST STEERING HEAD BEARINGS, Fall-Away

FASTENER	TORQUE VALUE		NOTES
Fork stem screw, first torque	22.6 Nm	200**in-lbs**	3.19 STEERING HEAD/FORK STEM AND BRACKET ASSEMBLY, Install
Fork stem screw, second torque	8.5 Nm	75**in-lbs**	2.14 ADJUST STEERING HEAD BEARINGS, Fall-Away
Fork stem screw, second torque	8.5 Nm	75**in-lbs**	3.19 STEERING HEAD/FORK STEM AND BRACKET ASSEMBLY, Install
Fork tube cap	24.5-28.5 Nm	18-21 ft-lbs	3.18 FRONT FORK, Install
Fork tube cap	24.5-28.5 Nm	18-21 ft-lbs	3.18 FRONT FORK, Drain and Fill Forks
Front axle nut	81.3-88.1 Nm	60-64 ft-lbs	3.4 FRONT WHEEL, Install
Front axle pinch bolt	12.5-14.4 Nm	111-127 **in-lbs**	3.4 FRONT WHEEL, Install
Front belt guard bracket to engine screw	10.0-12.0 Nm	89-106 **in-lbs**	3.21 BELT GUARDS, Install
Front belt guard screw	9.0-11.0 Nm	80-97 **in-lbs**	3.21 BELT GUARDS, Install
Front brake caliper banjo bolt	17.0-20.0 Nm	13-14 ft-lbs	3.12 FRONT BRAKE CALIPER, Install
Front brake caliper mounting screw	20.0-24.0 Nm	15-17 ft-lbs	3.12 FRONT BRAKE CALIPER, Install
Front brake disc screw	21.7-32.5 Nm	16-24 ft-lbs	3.4 FRONT WHEEL, Assemble
Front brake line clamp screw	7.2-8.8 Nm	64-77 **in-lbs**	3.15 BRAKE LINES, Install
Front brake master cylinder banjo bolt	17.0-20.0 Nm	13-14 ft-lbs	3.11 FRONT BRAKE MASTER CYLINDER, Install
Front brake master cylinder clamp screw	9.0-12.0 Nm	80-106 **in-lbs**	3.11 FRONT BRAKE MASTER CYLINDER, Install
Front brake master cylinder reservoir cover screw	2.0-4.0 Nm	18-35 **in-lbs**	2.8 INSPECT BRAKES, Replace Front Brake Pads
Front brake pad pin	14.8-19.5 Nm	131-173 **in-lbs**	2.8 INSPECT BRAKES, Replace Front Brake Pads
Front exhaust pipe clamp	10.0-12.0 Nm	89-106 **in-lbs**	6.18 EXHAUST SYSTEM, Assemble
Front fender screw	22.9-28.1 Nm	17-20 ft-lbs	3.29 FRONT FENDER, Install
Front license plate bracket screw	6.2-6.8 Nm	55-60 **in-lbs**	3.32 FRONT LICENSE PLATE BRACKET, Install
Fuel pump assembly nuts	4.2-4.5 Nm	38-39 **in-lbs**	6.8 FUEL PUMP ASSEMBLY, Install
Fuel rail screws	2.5-4.5 Nm	23-39 **in-lbs**	6.12 FUEL INJECTORS, Install
Handlebar switch housing screws, left	0.8-1.1 Nm	7-9 **in-lbs**	8.12 LEFT HANDLEBAR SWITCH HOUSING, Install
Headlamp fairing screw	2.3-3.3 Nm	21-29 **in-lbs**	3.25 HEADLAMP FAIRING, Install
Headlamp horizontal adjustment locknut	34.2-41.8 Nm	26-30 ft-lbs	8.18 HEADLAMP, Install
Headlamp horizontal adjustment locknut	34.2-41.8 Nm	26-30 ft-lbs	8.18 HEADLAMP, Adjust
Headlamp vertical adjustment locknut	20.6-25.5 Nm	16-18 ft-lbs	8.18 HEADLAMP, Install
Headlamp vertical adjustment locknut	20.6-25.5 Nm	16-18 ft-lbs	8.18 HEADLAMP, Adjust
Horn bracket screws	42.7-47.3 Nm	32-34 ft-lbs	8.17 HORN, Install
Horn screws	4.5-5.5 Nm	40-48 **in-lbs**	8.17 HORN, Install
IAC screws	2.0-4.0 Nm	18-35 **in-lbs**	6.11 IDLE AIR CONTROL (IAC), Install
Ignition coil inner bracket screws	22.5-27.5 Nm	17-20 ft-lbs	8.10 IGNITION COIL, Install
Ignition coil screws	9.0-11.0 Nm	80-97 **in-lbs**	8.10 IGNITION COIL, Install
Ignition switch screws	6.2-6.8 Nm	55-60 **in-lbs**	8.9 IGNITION SWITCH, Install
Induction module screws	2.5-4.5 Nm	23-39 **in-lbs**	6.11 IDLE AIR CONTROL (IAC), Install
Input shaft bearing retainer plate screws	10.0-12.0 Nm	89-106 **in-lbs**	5.10 TRANSMISSION RIGHT CRANKCASE BEARINGS, Install
Intake adapter screw	10.0-12.0 Nm	89-106 **in-lbs**	4.11 INTAKE ADAPTER, Install
Jiffy stand sensor bracket screw	22.0-29.0 Nm	17-21 ft-lbs	8.28 JIFFY STAND SENSOR, Install

FASTENER	TORQUE VALUE		NOTES
Jiffy stand sensor screw	9.0-11.0 Nm	80-97 **in-lbs**	3.34 RIDER FOOT CONTROLS, Install
Jiffy stand sensor screw	9.0-11.0 Nm	80-97 **in-lbs**	8.28 JIFFY STAND SENSOR, Install
Left side rider foot control screw	22.0-29.0 Nm	17-21 ft-lbs	3.34 RIDER FOOT CONTROLS, Install
License plate lamp screws	0.8-1.2 Nm	7-11 **in-lbs**	8.23 LICENSE PLATE LAMP, Install
License plate module screw	2.3-3.3 Nm	21-29 **in-lbs**	3.33 REAR LICENSE PLATE BRACKET, Install
Lower belt guard screw	2.3-3.3 Nm	21-29 **in-lbs**	3.21 BELT GUARDS, Install
Lower fork bracket pinch screw	34.3-39.2 Nm	26-28 ft-lbs	2.14 ADJUST STEERING HEAD BEARINGS, Fall-Away
Lower fork bracket pinch screw	34.3-39.2 Nm	26-28 ft-lbs	3.18 FRONT FORK, Install
Lower front engine mount to engine screw	42.7-47.3 Nm	32-34 ft-lbs	4.7 FRONT ENGINE MOUNT, Install
Lower front engine mount to frame screw	22.0-29.0 Nm	17-21 ft-lbs	4.7 FRONT ENGINE MOUNT, Install
Lower handlebar riser screw	42.7-47.3 Nm	32-34 ft-lbs	3.27 HANDLEBAR, Install
Mirror mount	11.7-14.3 Nm	104-126 **in-lbs**	3.28 MIRRORS, Install
Mirror tube nut	11.7-14.3 Nm	104-126 **in-lbs**	3.28 MIRRORS, Install
Mud guard screws	2.3-3.3 Nm	21-29 **in-lbs**	8.24 ELECTRONIC CONTROL MODULE (ECM), Install
Muffler bracket screws	22.5-27.5 Nm	17-20 ft-lbs	6.18 EXHAUST SYSTEM, Assemble
Muffler clamp	52.0-58.0 Nm	39-42 ft-lbs	6.17 MUFFLER, Install
Muffler nuts	25.0-30.0 Nm	19-22 ft-lbs	6.17 MUFFLER, Install
Muffler nuts	25.0-30.0 Nm	19-22 ft-lbs	6.18 EXHAUST SYSTEM, Install
Negative battery terminal screw	6.8-7.9 Nm	60-70 **in-lbs**	2.25 INSPECT BATTERY, Install
Neutral switch screws	5.0-7.0 Nm	45-62 **in-lbs**	8.16 NEUTRAL INDICATOR SWITCH, Install
Oil filter adapter	20.0-25.0 Nm	15-18 ft-lbs	4.26 OIL PUMP, Install
Oil nozzle screw	10.0-12.0 Nm	89-106 **in-lbs**	4.30 CRANKCASE OIL NOZZLES, Install/Apply LOCTITE 246 MEDIUM STRENGTH THREAD-LOCKER AND SEALANT (blue).
Oil passage plug	20.0-25.0 Nm	15-18 ft-lbs	4.31 OIL PASSAGE PLUGS, Install/See procedure to verify plug location.
Oil pressure switch	10.0-12.0 Nm	89-106 **in-lbs**	4.31 OIL PASSAGE PLUGS, Install
Oil pressure switch	10.0-12.0 Nm	89-106 **in-lbs**	8.15 OIL PRESSURE SWITCH, Install
Oil pressure test port plug	10.0-12.0 Nm	89-106 **in-lbs**	4.5 OIL PRESSURE, Oil Pressure Check
Oil pump housing screws	10.0-12.0 Nm	89-106 **in-lbs**	4.26 OIL PUMP, Install
Oil strainer cavity plug	20.0-25.0 Nm	15-18 ft-lbs	4.31 OIL PASSAGE PLUGS, Install
Oil strainer fasteners	10.0-12.0 Nm	89-106 **in-lbs**	4.27 OIL STRAINER, Install/Apply LOCTITE 243 MEDIUM STRENGTH THREADLOCKER AND SEALANT (blue).
Output pulley nut	68.0-84.0 Nm	51-62 ft-lbs	5.5 OUTPUT PULLEY, Install
Oxygen (O2) sensor	16.0-19.0 Nm	12-14 ft-lbs	6.16 OXYGEN (O2) SENSOR, Install
Positive battery terminal screw	6.8-7.9 Nm	60-70 **in-lbs**	2.25 INSPECT BATTERY, Install
Radiator screws	9.0-11.0 Nm	80-97 **in-lbs**	7.11 RADIATOR, Install
Radiator shroud screw	9.0-11.0 Nm	80-97 **in-lbs**	2.15 INSPECT RADIATOR AND COOLANT, Clean Radiator
Radiator shroud screws	9.0-11.0 Nm	80-97 **in-lbs**	7.11 RADIATOR, Install
Rear axle nut	190.0-203.0 Nm	140-150 ft-lbs	3.5 REAR WHEEL, Install

FASTENER	TORQUE VALUE		NOTES
Rear brake caliper banjo bolt	17.0-20.0 Nm	13-14 ft-lbs	3.14 REAR BRAKE CALIPER, Install
Rear brake caliper mounting screw	20.0-24.0 Nm	15-17 ft-lbs	3.14 REAR BRAKE CALIPER, Install
Rear brake disc screw	40.7-61.0 Nm	30-45 ft-lbs	3.5 REAR WHEEL, Assemble
Rear brake lever screw	7.0-9.0 Nm	62-79 **in-lbs**	3.34 RIDER FOOT CONTROLS, Assemble
Rear brake line clamp screw	7.2-8.8 Nm	64-77 **in-lbs**	3.15 BRAKE LINES, Install
Rear brake master cylinder banjo bolt	17.0-20.0 Nm	13-14 ft-lbs	3.13 REAR BRAKE MASTER CYLINDER, Install
Rear brake master cylinder mounting screw	9.5-10.5 Nm	84-92 **in-lbs**	3.13 REAR BRAKE MASTER CYLINDER, Install
Rear brake master cylinder reservoir cover screw	2.0-4.0 Nm	18-35 **in-lbs**	2.8 INSPECT BRAKES, Replace Rear Brake Pads
Rear brake pad pin	14.8-19.5 Nm	131-173 **in-lbs**	2.8 INSPECT BRAKES, Replace Rear Brake Pads
Rear brake pushrod jamnut	7.0-9.0 Nm	62-79 **in-lbs**	2.12 ADJUST BRAKE LINKAGE, Adjust
Rear engine mount bolt, to engine	42.7-47.3 Nm	32-34 ft-lbs	4.8 REAR ENGINE MOUNT, Install
Rear engine mount screw, to frame	22.5-27.5 Nm	17-20 ft-lbs	4.8 REAR ENGINE MOUNT, Install
Rear fender screw	45.0-55.0 Nm	34-40 ft-lbs	3.30 REAR FENDER, Install
Rear fender screw	45.0-55.0 Nm	34-40 ft-lbs	3.31 SAREE GUARD, Install
Rear fender screw	45.0-55.0 Nm	34-40 ft-lbs	3.31 SAREE GUARD, Install
Rear fork pivot shaft nut	110.0-120.0 Nm	82-88 ft-lbs	3.20 REAR FORK, Install
Rear fuel tank screw	24.3-29.7 Nm	18-21 ft-lbs	6.4 LIFT REAR OF FUEL TANK, Secure
Rear lighting harness retainer screw	1.2-2.0 Nm	11-17 **in-lbs**	8.20 REAR TURN SIGNAL LAMPS, Install
Rear lighting harness retainer screw	1.2-2.0 Nm	11-17 **in-lbs**	8.23 LICENSE PLATE LAMP, Install
Restrictor plug	20.0-25.0 Nm	15-18 ft-lbs	4.31 OIL PASSAGE PLUGS, Install
Restrictor plug	20.0-25.0 Nm	15-18 ft-lbs	4.31 OIL PASSAGE PLUGS, Install
Screw, cable retaining plate	0.9-1.1 Nm	8-9 **in-lbs**	3.24 THROTTLE CONTROL, Install
Screw, switch housing	0.9-1.1 Nm	8-9 **in-lbs**	3.24 THROTTLE CONTROL, Install
Screw, switch housing	0.9-1.1 Nm	8-9 **in-lbs**	3.24 THROTTLE CONTROL, Install
Seat retention screw	2.3-4.5 Nm	21-39 **in-lbs**	3.36 SEAT, Install
Seat strap screw	9.0-11.0 Nm	80-97 **in-lbs**	3.36 SEAT, Install
Shift drum contact assembly screw	5.0-7.0 Nm	45-62 **in-lbs**	5.8 DRUM AND FORKS, Assemble
Shifter shaft lever screw	9.0-11.0 Nm	80-97 **in-lbs**	5.6 SHIFTER SHAFT, Install
Shift lever rod assembly screw	4.6-6.1 Nm	41-53 **in-lbs**	3.34 RIDER FOOT CONTROLS, Install
Shift lever rod assembly screw	4.6-6.1 Nm	41-53 **in-lbs**	3.34 RIDER FOOT CONTROLS, Assemble
Shock absorber lower screw	61.0-68.0 Nm	45-50 ft-lbs	3.22 SHOCK ABSORBERS, Install
Shock absorber upper screw	61.0-68.0 Nm	45-50 ft-lbs	3.22 SHOCK ABSORBERS, Install
Shoulder bolt	10.0-12.0 Nm	89-106 **in-lbs**	4.18 CHAIN GUIDE, Install
Spark plug	10.0-12.0 Nm	89-106 **in-lbs**	2.26 REPLACE SPARK PLUGS, Install
Speedometer screws	10.8-13.2 Nm	96-116 **in-lbs**	8.14 SPEEDOMETER, Install
Spring holder bolt	10.0-12.0 Nm	89-106 **in-lbs**	4.13 CAMSHAFT SPROCKET AND TIMING CHAIN, Install
Starter relay screws	2.3-3.3 Nm	21-29 **in-lbs**	8.6 STARTER SOLENOID, Install
Starter relay terminal locknuts	6.0-10.0 Nm	54-88 **in-lbs**	8.6 STARTER SOLENOID, Install
Starter screws	10.0-12.0 Nm	89-106 **in-lbs**	8.5 STARTER, Install
Starter terminal nut	6.0-10.0 Nm	54-88 **in-lbs**	8.5 STARTER, Install

FASTENER	TORQUE VALUE		NOTES
Tail lamp screws	3.9-5.9 Nm	35-52 **in-lbs**	8.22 TAIL LAMP, Install
Tensioner mounting bolts and spring tensioning bolt	10-12 Nm	7.4-8.9 lb-ft	4.13 CAMSHAFT SPROCKET AND TIMING CHAIN, Camshaft Sprocket, Timing Chain and Cam Timing
Tensioner mounting bolts and spring tensioning bolt	10-12 Nm	7.4-8.9 lb-ft	4.13 CAMSHAFT SPROCKET AND TIMING CHAIN, Camshaft Sprocket, Timing Chain and Cam Timing
Tensioner mounting bolts and spring tensioning bolt	10-12 Nm	7.4-8.9 lb-ft	4.13 CAMSHAFT SPROCKET AND TIMING CHAIN, Camshaft Sprocket, Timing Chain and Cam Timing
Timing chain tensioner screw	10.0-12.0 Nm	89-106 **in-lbs**	4.13 CAMSHAFT SPROCKET AND TIMING CHAIN, Install
TMAP screw	2.5-4.5 Nm	23-39 **in-lbs**	6.13 TEMPERATURE MANIFOLD ABSOLUTE PRESSURE (TMAP) SENSOR, Install
Turn signal housing screw, rear	3.9-5.9 Nm	35-52 **in-lbs**	8.20 REAR TURN SIGNAL LAMPS, Install
Turn signal housing screws, front	9.0-11.0 Nm	80-97 **in-lbs**	8.19 FRONT TURN SIGNAL LAMPS, Install
Turn signal lens screw	0.6-0.8 Nm	5-7 **in-lbs**	8.19 FRONT TURN SIGNAL LAMPS, Install
Turn signal lens screw	0.6-0.8 Nm	5-7 **in-lbs**	8.20 REAR TURN SIGNAL LAMPS, Install
Upper belt guard screw	2.3-3.3 Nm	21-29 **in-lbs**	3.21 BELT GUARDS, Install
Upper fork bracket pinch screw	50.0-60.0 Nm	37-44 ft-lbs	3.18 FRONT FORK, Install
Upper front engine mount screw, to engine	42.7-47.3 Nm	32-34 ft-lbs	4.7 FRONT ENGINE MOUNT, Install
Upper front engine mount screw, to frame	42.7-47.3 Nm	32-34 ft-lbs	4.7 FRONT ENGINE MOUNT, Install
Upper handlebar riser screw	22.8-25.2 Nm	17-18 ft-lbs	3.27 HANDLEBAR, Install
Valve adjuster jamnut	10.0-12.0 Nm	89-106 **in-lbs**	2.24 INSPECT AND ADJUST VALVE LASH, Inspect and Adjust
Valve stem nut	1.4-1.7 Nm	12-15 **in-lbs**	3.4 FRONT WHEEL, Assemble
Valve stem nut	1.4-1.7 Nm	12-15 **in-lbs**	3.5 REAR WHEEL, Assemble
Voltage regulator bracket screws	22.5-27.5 Nm	17-20 ft-lbs	8.8 VOLTAGE REGULATOR, Install
Voltage regulator screws	9.0-11.0 Nm	80-97 **in-lbs**	8.8 VOLTAGE REGULATOR, Install
VSS screw	7.0-9.0 Nm	62-79 **in-lbs**	8.26 VEHICLE SPEED SENSOR (VSS), Install

A

Acronyms and Abbreviations. C-4
Air Cleaner. 6-3
Air Filter. 2-35
Alignment
  Headlamp. 8-21
  Rear Wheel. 3-23
Alpha Step
  Purpose. . . . . i-I
Alternator
  Cover. 4-48
  Rotor. 8-9
  Stator. 4-48
Assemble Topic
  Purpose. . . . . i-I
Axle
  Front. 3-7
  Rear. 3-10

B

Balancer
  Gear. 4-52
  Install. 4-52
  Shaft. 4-52
Bank Angle Sensor (BAS). 8-32
  Connector Location. B-3
Battery. 2-38
  Cable. 2-38
  Safety. 1-2
  Tray. 8-34
  Voltage Test. 2-39
Bearing
  Front Wheel. 3-8
  Left Crankcase Transmission. 5-19
  Main. 4-61
  Rear Wheel. 3-12
  Right Crankcase Transmission. 5-18
  Wheel. 3-18
Bleed Brakes. 3-32
  Front. 3-32
  Rear. 3-33
Bosch Compact 1.1M Connector
  Disconnect And Connect. A-1
Brake
  Bleed. . . . . See Bleed Brakes
  Check Fluid Level. 2-17
  Fluid. 3-32
  Fluid Safety. 1-2
  Foot Lever. 3-67
  Front Caliper. 3-26
  Front Disc. 3-8
  Front Line. 3-30
  Front Master Cylinder. 3-24
  Front Pads. 2-12
  Inspect Brakes. 2-12
  Inspect Disc Lateral Runout. 2-12
  Inspect Pad Thickness. 2-12
  Lamp. 8-27
  Rear Caliper. 3-29
  Rear Disc. 3-12
  Rear Line. 3-30
  Rear Master Cylinder. 3-27
  Rear Pads. 2-14
  Rear Pushrod. 2-20
Breather
  Hose. 6-17
  Operation. 4-9

C

Cable
  Battery. 2-38
  Clutch. 3-48
  Engine Ground. 8-35
  Lubricate. 2-11
  Spark Plug. 8-13
  Throttle. 3-51
Caliper
  Front Brake. 3-26
  Rear Brake. 3-29
Camshaft. 4-38
Cam Timing. 4-30
Capacities
  Coolant. 7-2
  Engine Oil. 3-3
  Fuel Tank. 6-2
Charcoal Canister. 6-25
Chassis
  Lubricate. 2-11
  Specifications. 3-3
Cleaning
  Bearings. . . . . i-II
  General. . . . . i-II
  Part Protection. . . . . i-II
  Rust or Corrosion Removal. . . . . i-II
Clutch. 5-9
  Cable. 3-48
  Cover. 4-50
  Disc. 5-9
  Hand Control. 3-48
  Lever. 3-48
  Lever Free Play. 2-19
  Lifter Plate. 5-9
  Plate. 5-9
  Service Wear Limits. 5-2
  Specifications. 5-2
  Switch Connector Location. B-1
Coil
  Ignition. 8-12
Compensator
  Rear Wheel. 3-14
Complete Topic
  Purpose. . . . . i-I
Connecting Rods. 4-66
Connectors
  Bosch Compact 1.1M. A-1
  Connector Number. B-15
  Delphi GT 150 Sealed. A-2
  Description. B-15
  Deutsch DT Sealed Connector. A-4
  End Views. B-17
  Function. B-15
  Furukawa QLW Sealed Connectors. A-8
  General Information. B-15
  Location Table. B-15
  Molex MX 150 Sealed. A-9
  Repair Instruction. B-15
  Sumitomo DL Sealed Connectors. A-13
  Sumitomo MTL Unsealed Connectors. A-14
  Sumitomo MT Sealed Connectors. A-13
  Sumitomo MT Unsealed Connectors. A-13
  Sumitomo MTW Unsealed Connectors. A-14
  Sumitomo WP Sealed Connectors. A-13
  Tyco 070 Multilock Unsealed. A-15
  Tyco GET 64 Sealed Connector. A-17
  Tyco Junior Power Timer Unsealed. A-19

Tyco Sealed Timer Connector. A-20
Tyco Super Seal 1.5 Sealed Connector. A-21
Yazaki SSD Sealed Connector. A-22
Conversions
Fluid. C-2
Length. C-1
Torque. C-3
Coolant
Drain. 7-7
Engine Coolant Temperature Sensor (ECT). 7-15
Fan. 8-30
Fan Connector Location. B-2
Fill. 7-7
Flow. 7-3
Hoses. 7-13
Inspect. 2-24
Leak Detection Dye Test. 7-6
Overflow Tank. 7-12
Pressure Cap Test. 7-4
Pressure Test. 7-4
Pump. 7-10
Radiator. 7-16
Safety. 1-2
System Pressure Test. 7-6
System Specifications. 7-2
Test for Blown Gasket. 7-6
Thermostat and Housing. 7-9
Troubleshooting. 7-4
Cooling Fan. 8-30
Crankcase. 4-59
Crankshaft. 4-66
Gear. 4-54
Crankshaft Position (CKP) Sensor. 4-48
Connector Location. B-2
Cylinder
Block Assembly. 4-43
Head. 4-34
Head Cover. 4-28
Liner. 4-43

D

Data Link
Connector Location. B-2
Delphi GT 150 Sealed Connector. A-2
Deutsch Connector. A-6
Deutsch DT Sealed Connector. A-4
Diode Pack. 8-4
Connector Location. B-2
Disassemble Topics
Purpose. . . . . i-I
Disc
Clutch. 5-9
Drive Belt. 5-5
Adjust Deflection. 2-30
Deflection Specifications (Table). 2-30
Guard. 3-44
Inspect and Adjust. 2-29
Measure Deflection. 2-30

E

ECM
Install. 8-29
Electrical
Power Disconnect. 8-6
Specifications. 8-3
Electronic Control Module (ECM). 8-29
Connector Location. B-3
Engine
Camshaft. 4-38
Camshaft Sprocket. 4-31
Compression Test. 4-11
Connecting Rods. 4-66
Crankcase. 4-59
Crankshaft. 4-66
Crankshaft Gear. 4-54
Cylinder Block. 4-43
Cylinder Head. 4-34
Cylinder Liner. 4-43
Exhaust Valves. 4-39
Front Mount. 4-16
Ground Cable. 8-35
Harness Connector Location. B-2
Install. 4-21
Intake Valves. 4-39
Main Bearing. 4-61
Oil. 2-5
Oil Flow. 4-7
Oil Pump. 4-56
Oil Safety. 1-2
Piston. 4-45
Piston Rings. 4-46
Rear Mount. 4-19
Rebuild Sequence. 4-23
Recommended Engine Oils. 2-5
Remove. 4-20
Rocker Arm. 4-36
Service Wear Limits. 4-5
Specifications. 4-3
Timing. 4-30
Timing Chain. 4-31
Timing Chain Guide. 4-41
Timing Chain Tensioner. 4-31
Top Dead Center. 4-23
Wire Harness. 8-36
Engine Coolant Temperature (ECT) Sensor
Connector Location. B-2
Exhaust
System. 6-21
System Leak Check. 2-34
Valves. 4-39

F

Fairing
Headlamp. 3-54
Fender
Front. 3-60
Rear. 3-61
Filter
Air. 2-35
Fuel. 6-9
Oil. 2-7
Flasher
Connector Location. B-3
Turn Signal. 8-26
Fluid Conversions. C-2

Foot Controls . . . 3-65
Footpeg
  Passenger . . . 3-69
  Rider . . . 3-67
Fork
  Bracket . . . 3-40
  Front . . . 3-35
  Front Fork Leak Check . . . 3-35
  Front Lock . . . 8-11
  Front Stem . . . 3-40
  Oil . . . 3-36
  Rear . . . 3-42
Fuel
  Filter . . . 6-9
  Front Injector Connector Location . . . B-2
  Gasoline Blends . . . 2-5
  Injectors . . . 6-14
  Lift Tank For Service . . . 6-5
  Line . . . 6-7
  Pressure Test . . . 6-8
  Pump . . . 6-9
  Pump Connector Location . . . B-2
  Rear Injector Connector Location . . . B-2
  Recommended Fuel . . . 2-5
  Safety . . . 1-2
  Secure Tank After Service . . . 6-5
  System Specifications . . . 6-2
  Tank . . . 6-6
  Tank Vent Line . . . 6-11
Furukawa QLW Sealed Connectors
  Disconnect And Connect . . . A-8
Fuse . . . 8-4
  Block Location . . . B-2
  Main . . . 8-4

G

Gasoline
  Safety . . . See Fuel Safety
General
  Using the Manual . . . i-I
Glossary
  Acronyms and Abbreviations . . . C-4
Grip
  Left . . . 3-56
  Right . . . 3-51
Guard
  Drive Belt . . . 3-44
  Saree . . . 3-62

H

Hand Grip
  Left . . . 3-56
  Right . . . 3-51
Handlebar . . . 3-57
  Left Switch Housing . . . 8-14
  Right Switch Housing . . . 8-15
Harness
  Engine Wire . . . 8-36
  Main Wire . . . 8-38
Head
  Cylinder . . . 4-34
Headlamp . . . 8-20
  Adjust . . . 8-21
  Connector Location . . . B-2
  Fairing . . . 3-54
Horn . . . 8-19
  Connector Location . . . B-2
Hydraulic Fluid
  Safety . . . 1-2

I

Icons
  Definition . . . i-I
Idle Air Control (IAC) . . . 6-13
  Connector Location . . . B-2
Ignition
  Coil . . . 8-12
  Coil Connector Location . . . B-2
  Switch . . . 8-11
  Switch Connector Location . . . B-2
Induction Module . . . 6-18
Install Topics
  Purpose . . . i-I
Intake
  Adapter . . . 4-27
  Induction Module . . . 6-18
  Leak Test . . . 6-23
  Manifold . . . 6-18
  Valves . . . 4-39

J

Jiffy Stand . . . 3-72
  Sensor . . . 8-33
  Sensor Connector Location . . . B-2

K

Kick Stand . . . See Jiffy Stand

L

Layout
  Manual . . . i-I
License Plate
  Front Bracket . . . 3-63
  Module . . . 3-64
  Rear Bracket . . . 3-64
  Rear Lamp . . . 8-28
LOCTITE . . . i-III

M

Main Bearing . . . 4-61
Main Fuse
  Location . . . B-2
Maintenance
  Adjust Brake Linkage . . . 2-20
  Adjust Drive Belt Deflection . . . 2-30
  Check and Adjust Throttle Cables . . . 2-18
  Clean Radiator . . . 2-24
  Drain Front Brake Fluid . . . 3-32
  Drain Rear Brake Fluid . . . 3-32
  Drive Belt Deflection . . . 2-30
  Inspect Air Filter . . . 2-35
  Inspect and Adjust Drive Belt and Sprockets . . . 2-29
  Inspect and Adjust Valve Lash . . . 2-36
  Inspect Exhaust System . . . 2-34
  Inspect Rear Shock Absorber Bushings . . . 3-46
  Recommended Engine Oils . . . 2-5
  Replace Engine Oil and Filter . . . 2-7

Replace Fork Oil. . . . 3-36
Replace Spark Plugs. . . . 2-41
Secure Motorcycle for Service. . . . 2-2
Storage. . . . 2-43
Troubleshooting. . . . 2-44
Manual
How to Use. . . . i-I
Layout. . . . i-I
Master Cylinder
Front Brake. . . . 3-24
Rear Brake. . . . 3-27
Metric System. . . . C-2
Mirrors. . . . 3-59
Molex MX 150 Sealed Connector. . . . A-9
Muffler. . . . 6-20
End Cap. . . . 6-20

N

Neutral Switch. . . . 8-18
Connector Location. . . . B-2
Nozzle
Oil. . . . 4-63
Numeric Step
Purpose. . . . i-I

O

Oil
Drain Plug. . . . 2-7
Engine. . . . 2-5
Filter. . . . 2-7
Filter Adapter. . . . 4-56
Flow. . . . 4-7
Nozzle. . . . 4-63
Passage Plug. . . . 4-64
Pressure. . . . 4-10
Pressure Indicator Lamp. . . . 4-10
Pressure Relief Valve. . . . 4-56
Pressure Switch. . . . 8-17
Pressure Switch Connector Location. . . . B-2
Pressure Test. . . . 4-10
Pump. . . . 4-56
Safety. . . . 1-2
Strainer. . . . 4-58
Winter Lubrication. . . . 2-6
Order of Operation
Manual Layout. . . . i-I
Output Pulley. . . . 5-6
Oxygen (O2) Sensor. . . . 6-19
Front Connector Location. . . . B-1
Rear Connector Location. . . . B-3

P

Piston. . . . 4-45
Pin. . . . 4-45
Rings. . . . 4-46
Plug
Oil Passage. . . . 4-64
Spark. . . . 2-41
Power Disconnect. . . . 8-6
Prepare Topic
Purpose. . . . i-I
Pump
Fuel. . . . 6-9
Purge Lines: California Emissions. . . . 6-26
Purge Solenoid. . . . 6-24
Connector Location. . . . B-2

R

Radiator. . . . 7-16
Fan. . . . 8-30
Relay Block
Location. . . . B-2
Relays. . . . 8-4
Remove Topic
Purpose. . . . i-I
Ring Gear
Starter. . . . 8-9
Rocker Arm. . . . 4-36
Rotor
Alternator. . . . 8-9

S

Safety
Battery. . . . 1-2
Brake Fluid. . . . 1-2
Coolant. . . . 1-2
Engine Oil. . . . 1-2
Eye protection. . . . 1-1
Fuel. . . . 1-2
Gasoline. . . . See Fuel Saftey
General. . . . 1-1
Hearing protection. . . . 1-1
Hydraulic Fluid. . . . 1-2
Oil. . . . 1-2
Protective wear. . . . 1-1
Weight Limit Specifications (Table). . . . 3-3
Saree Guard. . . . 3-62
Sealed Wheel Bearings
Inspect Lateral End Play. . . . 3-17
Seat. . . . 3-70
Rentention Nut. . . . 3-70
Strap. . . . 3-70
Sensor
Bank Angle. . . . 8-32
Crankshaft Position (CKP) Sensor. . . . 4-48
ECT. . . . 7-15
Jiffy Stand. . . . 8-33
Oxygen (O2). . . . 6-19
TMAP. . . . 6-16
TPS. . . . Induction Module
Vehical Speed Sensor (VSS). . . . 8-31
Service Wear Limits
Clutch. . . . 5-2
Engine. . . . 4-5
Servicing a New Motorcycle. . . . 2-2
Shift Drum. . . . 5-13
Shifter Shaft. . . . 5-7
Shock Absorber. . . . 3-46
Preload. . . . 3-46
Shop Practices
Checking Torques. . . . i-II
Cleaning. . . . i-II
Disposal and Recycling. . . . i-II
Removing Parts. . . . i-II
Side Covers. . . . 3-34
Side Stand. . . . Jiffy Stand

Solenoid
Purge. 6-24
Spark Plug. 2-41
Cable. 8-13
Cable Inspection. 2-41
Gap. 2-41
Special Tools. . . . . i-III
Specifications
Chassis. 3-3
Chassis. 3-3
Clutch. 5-2
Dimensions (Table). 3-3
Electrical. 8-3
Engine. 4-3
Fall-Away (Table). 2-22
Tire Runout (Table). 3-21
Transmission. 5-2
Weight (Table). 3-3
Speedometer. 8-16
Sprocket
Inspect. 2-29
Starter. 8-7
Cable. 8-7
Gear. 4-55
Ring Gear. 8-9
Solenoid. 8-8
Solenoid Connector Location. B-3
Stator. 4-48
Steering Head Bearings
Fall-Away Specifications (Table). 2-22
Storage
Place in Storage. 2-43
Remove from Storage. 2-43
Sumitomo DL Sealed Connectors. A-13
Sumitomo MTL Unsealed Connectors. A-14
Sumitomo MT Sealed Connectors. A-13
Sumitomo MT Unsealed Connectors. A-13
Sumitomo MTW Unsealed Connectors. A-14
Sumitomo WP Sealed Connectors. A-13
Swingarm. . . . . See Fork, Rear
Switch
Ignition. 8-11
Left Handlebar Switch Connector Location. B-2
Left Handlebar Switch Housing. 8-14
Neutral. 8-18
Oil Pressure. 8-17
Right Handlebar Switch Connector Location. B-2
Right Handlebar Switch Housing. 8-15
Symbols
Definition. . . . . i-I

T

Tail Lamp. 8-27
TDC. 4-23
Temperature Manifold Absolute Pressure Sensor (TMAP)
Install. 6-16
Test for Blown Gasket. 7-6
Thermostat. 7-9
Throttle
Adjust Cables. 2-18
Cable. 3-51
Control. 3-51
Throttle Position Sensor (TPS) Connector Location. . B-2
Twist Grip. 3-51
Timing
Chain. 4-31
Chain Guide. 4-41
Chain Tensioner. 4-31
Engine. 4-30
Tires
Check Runout. 3-20
Clean and Inspect. 3-20
Front Valve Stem. 3-8
Inspection. 2-10
Install. 3-20
Rear Valve Stem. 3-12
Remove. 3-20
Runout Specifications (Table). 3-21
Wheel Balancing. 3-21
When To Replace. 2-10
TMAP Sensor. 6-16
Connector Location. B-2
Tool
Special. . . . . i-III
Torque Conversion. C-3
Trademarks
Harley-Davidson. . . . . i-III
Referenced Products. . . . . i-III
Transmission
Assemble. 5-15
Disassemble. 5-15
Gear Shift Lever. 3-67
Install. 5-15
Output Pulley. 5-6
Remove. 5-15
Shift Detent. 5-7
Shift Drum. 5-13
Shifter Shaft. 5-7
Specifications. 5-2
Sprocket. . . . . See Output Pulley
Theory of Operation. 5-3
Troubleshooting
Brakes. 2-46
Compression Test. 4-11
Coolant. 7-4
Electrical System. 2-45
Engine. 2-44
Engine Does Not Crank, Cranks But Does Not Start or Starts Hard (Table). 4-13
Engine Lubrication System (Table). 4-15
Engine Performance (Table). 4-14
Handling. 2-46
Lubrication System. 2-45
Transmission. 2-45
Turn Signal
Flasher. 8-26
Front. 8-23
Front Left Connector Location. B-2
Front Right Connector Location. B-2
Rear. 8-24
Tyco 070 Multilock Unsealed Connector. A-15
Tyco GET 64 Sealed Connectors. A-17
Tyco Junior Power Timer Unsealed. A-19
Tyco Sealed Timer Connector. A-20
Tyco Super Seal 1.5 Sealed Connector. A-21

U

Using the Manual. . . . . i-I

V

Valve
- Exhaust. 4-39
- Intake. 4-39
- Lash. 2-36
- Oil Pressure Relief. 4-56

Valve Stem
- Front Tire. 3-8
- Rear Tire. 3-12

Vapor Valve. 6-12
Vehicle Identification Number (VIN). 3-5
- Abbreviated. 3-5

Vehicle Speed Sensor (VSS). 8-31
- Connector Location. B-2

Voltage Regulator. 8-10
- Connector Location. B-2

W

Weight Limits (Table). 3-3
Wheel
- Alignment. 3-23
- Balance. 3-21
- Compensator. 3-14
- Front. 3-7
- Rear. 3-10
- Weights. 3-21

Winter Lubrication. 2-6
Wiring
- Color Codes. B-4
- Diagram Symbols. B-4
- Engine Ground Cable. 8-35
- Engine Harness. 8-36
- Main Harness. 8-38

Wiring Diagram List. B-6

Y

Yazaki SSD Sealed Connector. A-22